TRELLEBORG
SEALING SOLUTIONS

Hydraulic seals – linear

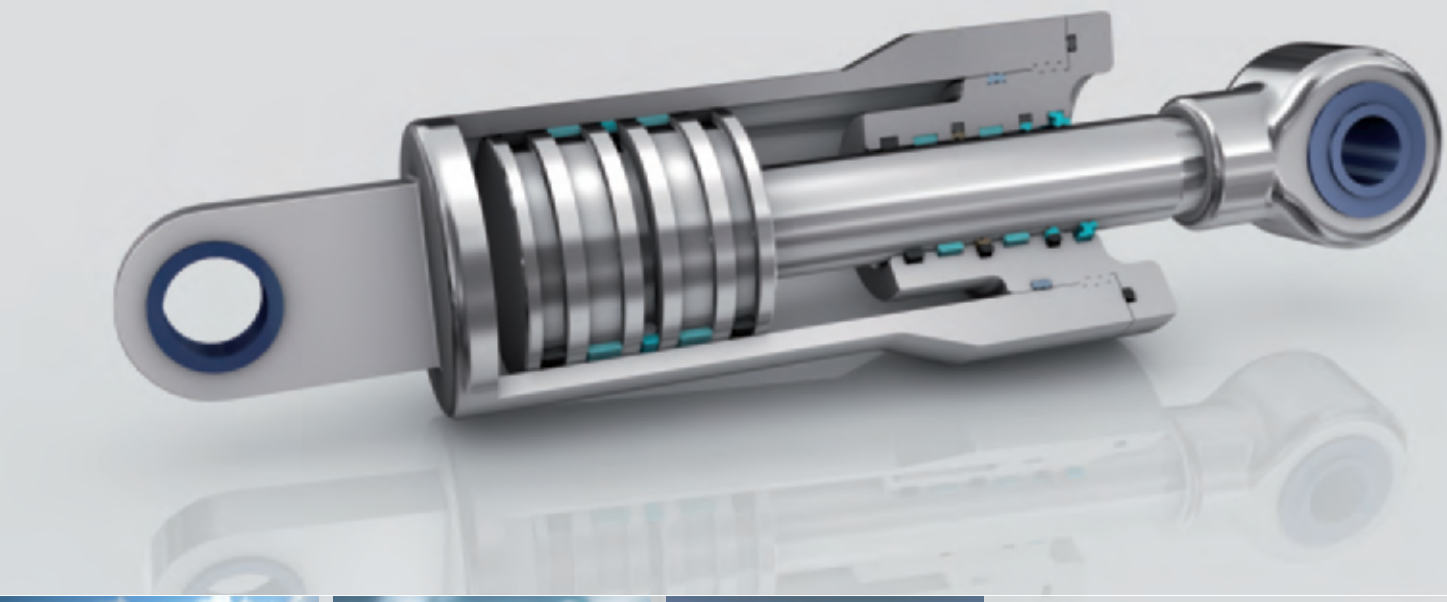

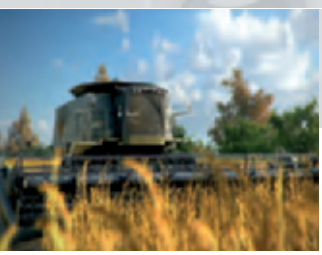

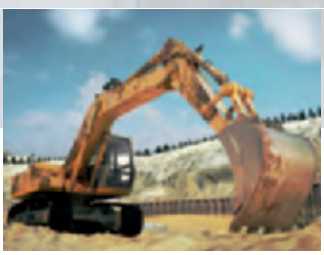

Your Partner for Sealing Technology

Your Partner for Sealing Technology

Trelleborg Sealing Solutions is a major international sealing force, uniquely placed to offer dedicated design and development from our market-leading product and material portfolio: a one-stop-shop providing the best in elastomer, thermoplastic, PTFE and composite technologies for applications in aerospace, industrial and automotive industries.

With 50 years of experience, Trelleborg Sealing Solutions engineers support customers with design, prototyping, production, test and installation using state-of-the-art design tools. An international network of over 70 facilities worldwide includes over 25 manufacturing sites, strategically-positioned research and development centers, including materials and development laboratories and locations specializing in design and applications.

Developing and formulating materials in-house, we utilize the resource of our material database, including over 2,000 proprietary compounds and a range of unique products.

Trelleborg Sealing Solutions fulfills challenging service requirements, supplying standard parts in volume or a single custom-manufactured component, through our integrated logistical support, which effectively delivers over 40,000 sealing products to customers worldwide.

Facilities are certified to ISO 9001:2008 and ISO/TS 16949:2009. Trelleborg Sealing Solutions is backed by the experiences and resources of one of the world's foremost experts in polymer technology: the Trelleborg Group.

ISO 9001:2008 **ISO/TS 16949:2009**

The information in this brochure is intended to be for general reference purposes only and is not intended to be a specific recommendation for any individual application. The application limits for pressure, temperature, speed and media given are maximum values determined in laboratory conditions. In application, due to the interaction of operating parameters, maximum values may not be achieved. It is vital therefore, that customers satisfy themselves as to the suitability of product and material for each of their individual applications. Any reliance on information is therefore at the user's own risk. In no event will Trelleborg Sealing Solutions be liable for any loss, damage, claim or expense directly or indirectly arising or resulting from the use of any information provided in this brochure. While every effort is made to ensure the accuracy of information contained herewith, Trelleborg Sealing Solutions cannot warrant the accuracy or completeness of information.

To obtain the best recommendation for a specific application, please contact your local Trelleborg Sealing Solutions marketing company.

This edition supersedes all previous brochures.
This brochure or any part of it may not be reproduced without permission.

® All trademarks are the property of Trelleborg Group.

The turquoise color is a registered trademark of Trelleborg Group.

© 2011, Trelleborg Group. All rights reserved.

TRELLEBORG
SEALING SOLUTIONS

Linear Seals

Contents

Introduction

Part I - Rod Seals

Part II - Piston Seals

Part III - Scrapers

Part IV - Slydring® - Wear Rings

Latest information available at www.tss.trelleborg.com
Edition January 2011

TRELLEBORG
SEALING SOLUTIONS

Introduction

The Trelleborg Group

Automotive

- Antivibration Systems
- Noise and Vibration Dampening
- Fluid Systems

Wheel Systems

- Agricultural and Forestry Tires
- Industrial Tires

Engineered Systems

- Engineering Solutions
- Marine Fenders
- Industrial Fluid Control
- Sealing Profiles for Buildings
- Water Proofing
- Offshore

Sealing Solutions

- Precision seals for the Industrial, Automotive and Aerospace markets

Trelleborg Sealing Solutions

Food, Pharmaceutical and Chemical Processing

Machine Tools

Oil and Gas

Semiconductor

Automotive

Aerospace

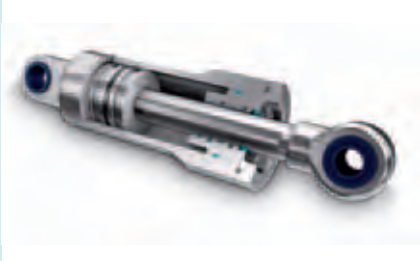

Fluid power

Life Sciences

Off-Highway

We build long term partnerships with customers and suppliers by providing leading technology and excellent service

Renewable Energy

TRELLEBORG
SEALING SOLUTIONS

Global Resources

Americas

- 1 Research & Development Centers
- 13 Marketing Companies
- 1 Logistics Centers SCM
- 8 Manufacturing Sites

Worldwide

- 7 Research & Development Centers
- 43 Marketing Companies
- 4 Logistics Centers SCM
- 23 Manufacturing Sites

TRELLEBORG
SEALING SOLUTIONS

Global Resources

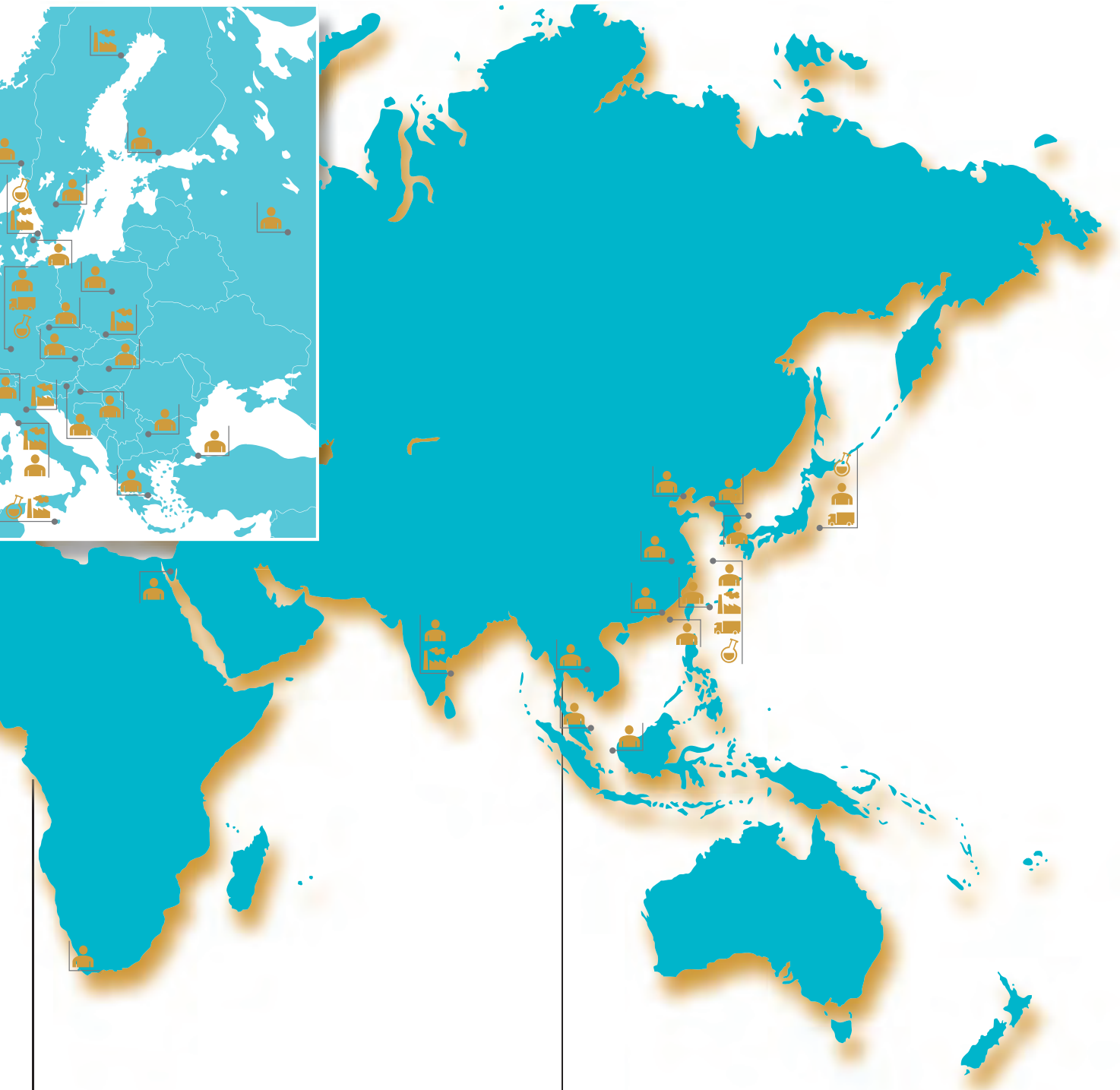

Europe

- 4 Research & Development Centers
- 19 Marketing Companies
- 1 Logistics Centers SCM
- 13 Manufacturing Sites

Asia

- 2 Research & Development Centers
- 11 Marketing Companies
- 2 Logistics Centers SCM
- 2 Manufacturing Sites

TRELLEBORG
SEALING SOLUTIONS

Mission Statement

Our Mission

We will be the supply partner of first choice within our chosen markets, working globally through our local teams. We will build long-term partnerships with customers and suppliers by providing leading technology and excellent service. We are determined to be different.

Sealing technology

Trelleborg Sealing Solutions offers an outstandingly comprehensive sealing portfolio – a one-stop shop providing the best in elastomer, thermoplastic, PTFE and composite technologies; our solutions are featured in virtually every application conceivable within the aerospace, automotive and industrial industries.

A worldwide presence

We are uniquely placed to offer a dedicated design and development service for sealing solutions, globally servicing, supporting and supplying our customers through an unrivalled international network.

- Over 70 facilities worldwide
- More than 20 manufacturing sites
- 7 strategically positioned materials and development laboratories
- Internationally linked design and application centers

Commitment - To customers' needs long-term

The aim of Trelleborg Sealing Solutions is to facilitate customers in the achievement of cost effective, durable solutions that match their specific business requirements and needs. We are one of the world's foremost experts in polymer sealing technology. We develop and manufacture market safety-critical polymer-based precision seals and associated systems.

TRELLEBORG
SEALING SOLUTIONS

Mission Statement

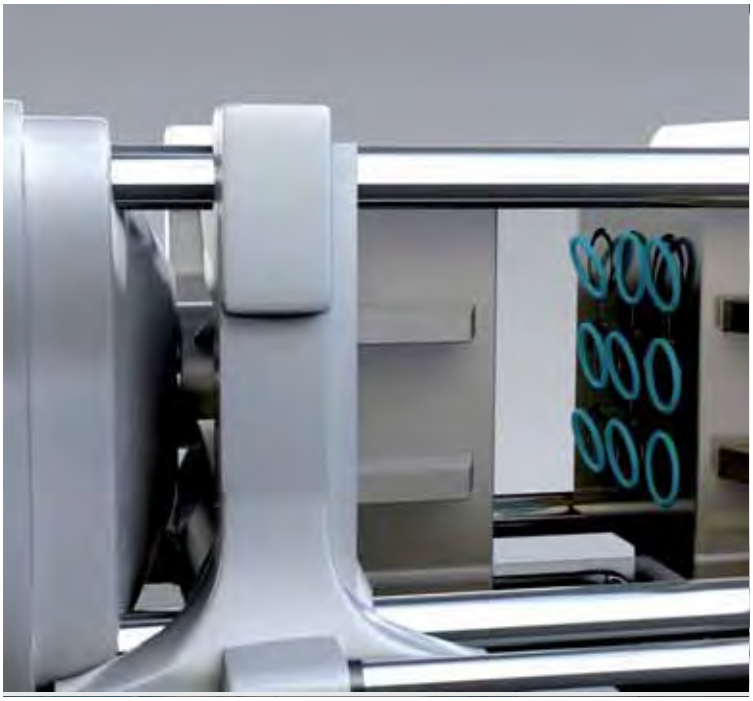

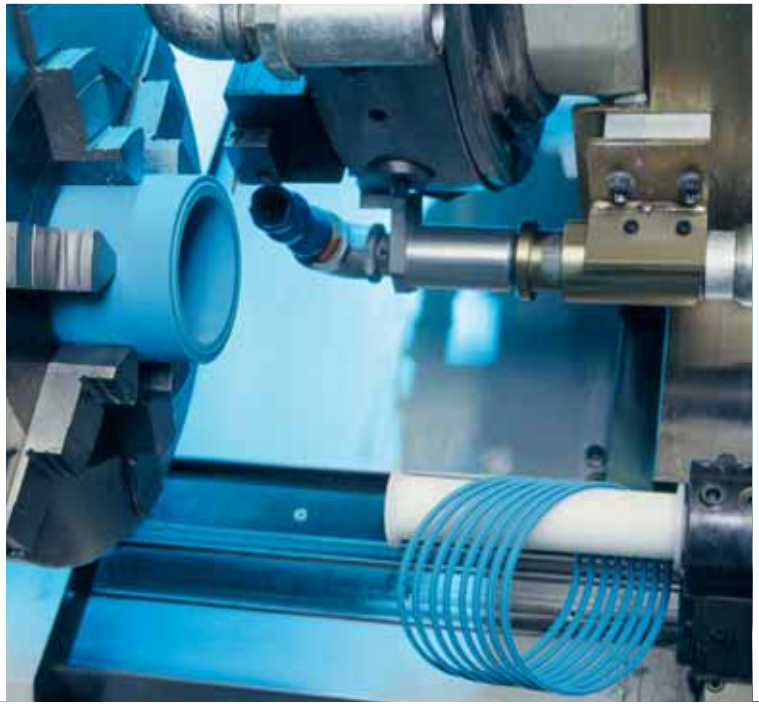

Latest information available at www.tss.trelleborg.com
Edition January 2011

TRELLEBORG
SEALING SOLUTIONS

Products, brands and materials

Our pioneering products

Trelleborg Sealing Solutions is pioneering within the sealing industry and continuously developing innovative products.

- Turcon® AQ Seal®
- D-A-S Compact Seal®
- Turcon® Double Delta®
- Turcon® Excluder®
- Turcon® Glyd Ring® T
- Turcon® Hatseal®
- Zurcon® L-Cup®
- Turcite® Slydring®
- Turcite® B-Slydway®
- Turcon® Stepseal® 2K
- Turcon® Stepseal® V
- V-Ring®
- Varilip®
- Turcon® Variseal®
- Turcon® VL-Seal™
- Turcon® Wedgpak®
- Wills Rings®
- Zurcon® Wynseal®

World renowned names united

We own many of the longest established and leading names within the seal industry. These include:

- American Variseal
- Busak+Shamban
- Dowty Seals
- Chase Walton
- Forsheda
- GNL
- Hydro-Components
- Impervia
- Nordex
- Orkot
- Palmer Chenard
- Polypac
- SF Medical
- Shamban
- Silcofab
- Skega
- Stefa
- Wills

Proprietary materials

Ongoing development has yielded some of the most successful sealing materials available for these types for sealing.

- HiMod®
- Isolast®
- Luytex®
- Orkot®
- Turcite®
- Turcon®
- Turel®
- Zurcon®

TRELLEBORG
SEALING SOLUTIONS

Products, brands and materials

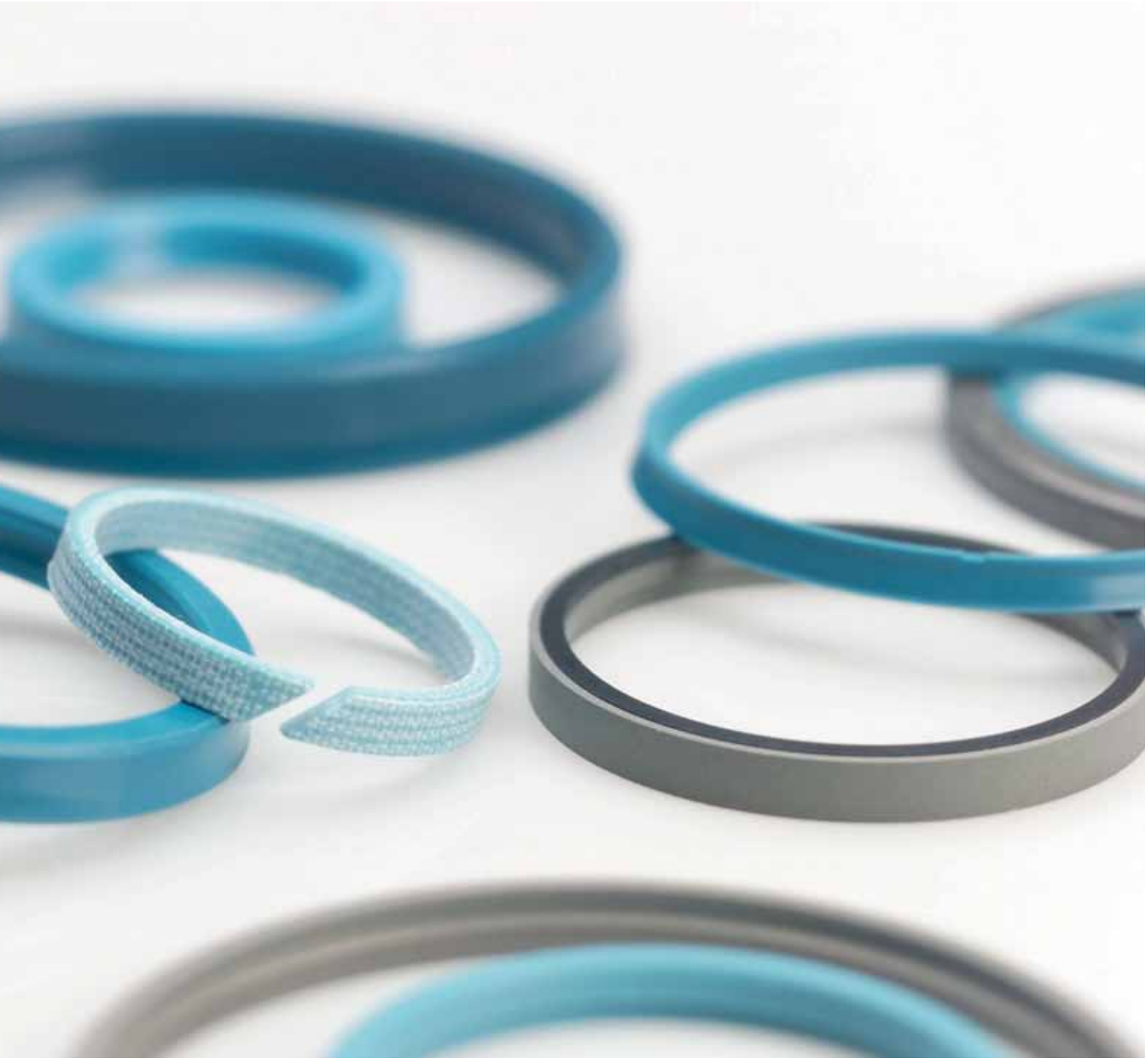

Latest information available at www.tss.trelleborg.com
Edition January 2011

TRELLEBORG
SEALING SOLUTIONS

Seals get animated

A range of films specific to different industries or products

Seals get animated

Complex sealing configurations can feature a large number sealing elements. Trying to illustrate these on a 2D page is difficult and can never properly show their function or characteristics. Trelleborg Sealing Solutions therefore turned to the latest graphic technologies to produce 3D animations of applications and typical sealing solutions for them.

A range of films specific to different industries or products are available to view on the Trelleborg Sealing Solutions website or via YouTube.

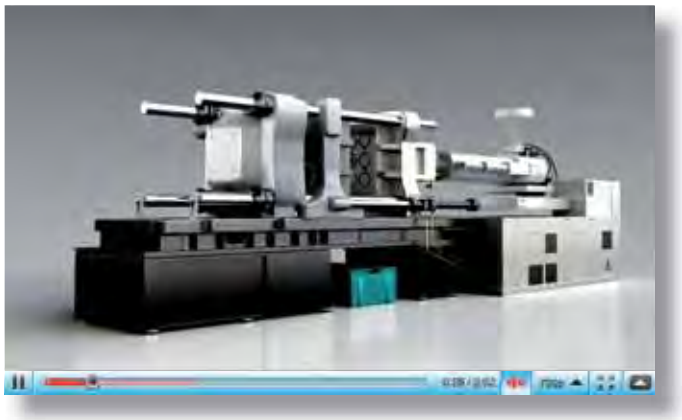

You can now link to our films and animations from

www. **tss.trelleborg.com/films**

or view them on You Tube at

www. **YouTube.com/trelleborgseals**

TRELLEBORG
SEALING SOLUTIONS

Seals get animated

TRELLEBORG
SEALING SOLUTIONS

YouTube™

Online tools make life easier

Trelleborg Sealing Solutions has developed a number of online tools that make the working life of an engineer specifying seals easier.

Online tools make life easier

Trelleborg Sealing Solutions has developed a number of online tools that make the working life of an engineer specifying seals easier.

All these industry-leading online tools are available free-of-charge from the Trelleborg Sealing Solutions website at www.tss.trelleborg.com. To use these advanced services all you have to do is register on the Members Area.

www. tss.trelleborg.com

Sealing Solutions Configurator

The Sealing Solutions Configurator is the first tool of its kind offered by any seal supplier. It allows engineers to identify a proven sealing solution for their specific application in just four easy steps.

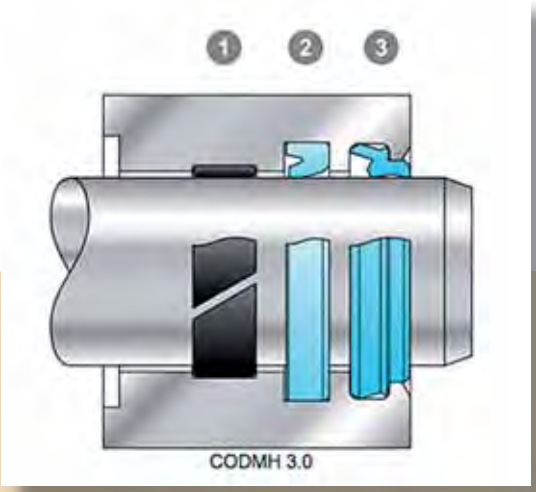

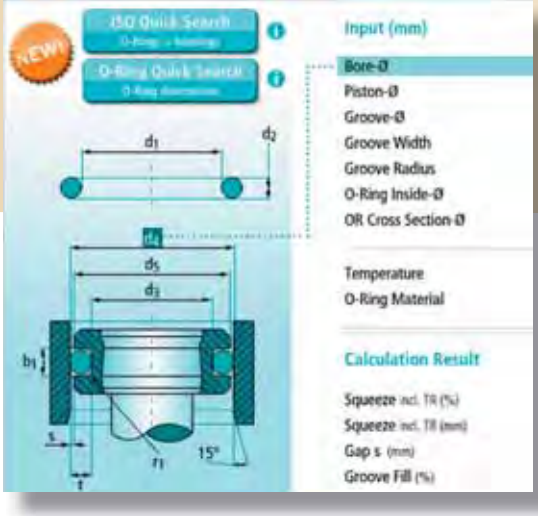

O-Ring Calculator

An industry-leading tool, the easy to use O-Ring calculator includes a sizing capability, design parameter recommendations and complete measurements. Results and comments may be printed, saved online or filed as a PDF.

Online tools make life easier

Powerful electronic Catalog

With the powerful electronic catalog you can search through over 100,000 seals by item number or by their properties. Comprehensive and detailed information can be accessed along with an interactive quote facility.

Versatile CAD service

The CAD download facility provides thousands of drawings from a wide seal range. It gives the option of 2 or 3 dimensional files, in a range of formats to suit most commonly used CAD systems.

Materials search and chemical compatibility check

These two programs allow you to find out the compatibility of sealing materials to hundreds of different media and help identify the most suitable material for your application.

TRELLEBORG
SEALING SOLUTIONS

Part I
Rod Seals

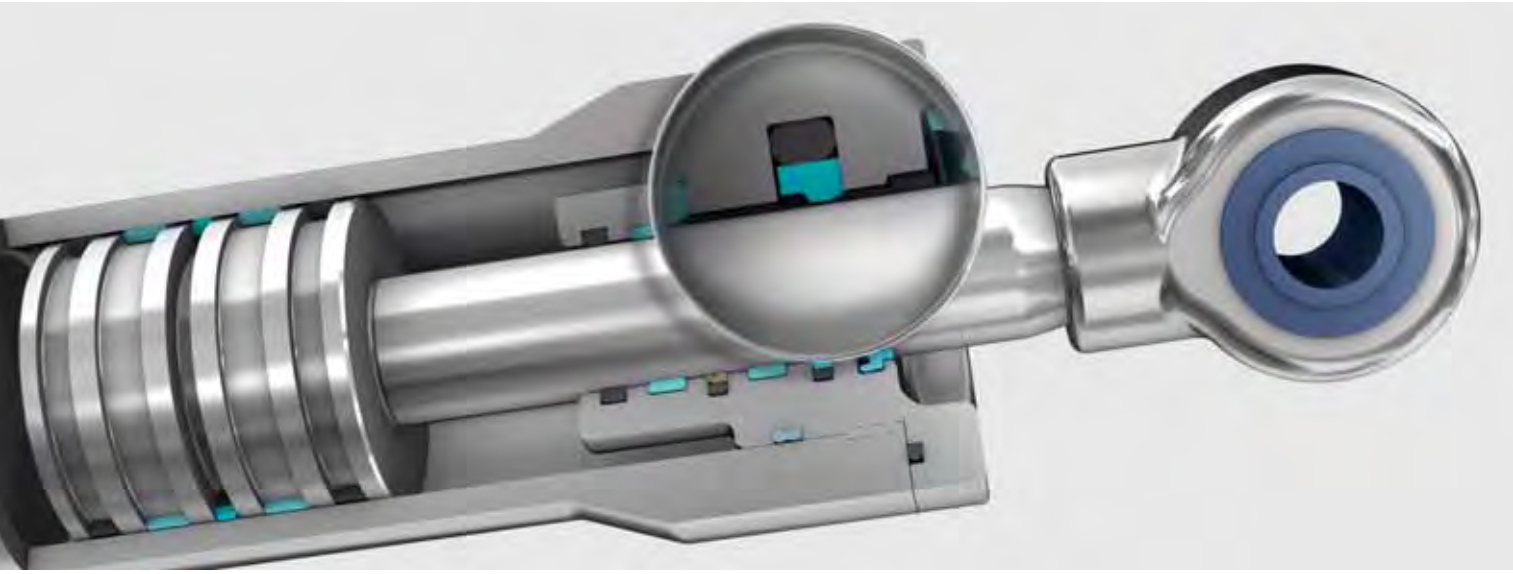

Contents

Choice of the Sealing Element 4
Design Instructions 9
Installation Instructions 11
Quality Criteria 16
Storage Instructions 16
Turcon® Stepseal® 2K 19
Turcon® Stepseal® V 39
Zurcon® Rimseal 53
POLYPAC® - Veepac CH 63
POLYPAC® - Veepac CH/G5 79
POLYPAC® - Selemaster SM 85
POLYPAC® - Balsele 93
Zurcon® L-Cup® 113
Zurcon® U-Cup, Type RU2 121
Zurcon® U-Cup, Type RU6 127
Zurcon® U-Cup, Type RU9 133
Zurcon® Buffer Seal 141
Turcon® Variseal® M2 149
Turcon® VL Seal 155
Turcon® Glyd Ring® 167
Turcon® Glyd Ring® T 181
Turcon® AQ-Seal® with Bean Seal 195
Turcon® AQ-Seal® 5 with Bean Seal 205
Zurcon® Wynseal M 215
Turcon® Double Delta® 225
Non Standard Seals 233

■ Choice of the Sealing Element

Sealing elements have a decisive influence on the design, function and service life of hydraulic and pneumatic cylinders and systems.

This applies equally to the piston rod seals where leak tightness, resistance to wear and gap extrusion, resistance to process media, resistance to high and low temperatures, low friction, compact form and simple installation are demanded in order to meet the requirements of industry for a functional sealing solution.

The significance of these parameters and their limits is generally dependent on the requirements of the specific application. Trelleborg Sealing Solutions has therefore developed a complete range of seals which, due to their optimized geometries and designs and the use of high-quality materials such as Turcon® and Zurcon®, satisfy the technical and economic demands of the industry in full.

In order to be in a position to select the most appropriate seal type and material, it is necessary to first define all the desired functional parameters. Table I can then be used to make an initial selection of seals and materials according to the specific requirements of the application.

The second column of the table contains the number of the page on which further general information together with specific design and installation instructions on the particular seal type and materials (or material combinations with multi-element seals, e.g. Turcon® Stepseal® 2K) can be found.

Furthermore on page 10, attention is drawn to the quality of the mating surface. We recommend that the limits specified there be observed, as they have a decisive influence on the functionality and service life of the system.

The final choice of seal type and material must also take account of the detailed information on the seal elements.

Please do not hesitate to contact our Technical Department for further information on specific applications and special technical questions.

Note on Ordering

All multi-element standard rod seals, e.g. Turcon® Stepseal® 2K, are generally supplied as complete seal sets. The supply includes the seal and matching elastomer energizing elements. The O-Ring does not have to be ordered separately. It is also possible to use other O-Ring materials from our O-Ring catalogue. In this case, please order the seal ring and O-Ring separately.

When ordering the seal ring separately, it is then not necessary to mention the "O-Ring material code" in the TSS Article No. shown in the ordering examples.

Older designs of seals no longer contained in this catalogue naturally continue to be available (see chapter Non Standard Seals). For all new applications, however, we recommend the use of the seal types and preferred sizes (ISO series, wherever possible) listed in this catalogue.

Other combinations of Turcon® materials and special designs can be developed and supplied for special applications in all intermediate sizes up to 2.600 mm diameter, provided there is sufficient demand.

The sizes contained in this catalogue are mostly available from stock or can be supplied at short notice. We reserve the right to modify our supply programme.

Table I Selection Criteria for Rod Seals

Seal		Application				Standard	Size Range	Ac-tion		Technical Data*			Recom-mended Seal Material
										Temp. Range **	Speed	Pressure	
Type	Page	Field of Application	Light	Medium	Heavy	ISO/DIN	mm	Single	Double	°C	m/s	MPa max.	
Turcon® Stepseal® 2K	19	Mobile hydraulics	●	●	●	7425/2	3-2600	X		-45/ +200	15	50	Turcon® M12
		Standard cylinders	●	●	●								
		Machine tools	●	●	●							50	Turcon® T46
		Injection moulding machines	●	●	●								
		Presses	●	●	●							20	Turcon® T05
		Automotive industry	●	●	●								
		Hydraulic hammers	●	●	●		3-2200			-45/ +110	2	60	Zurcon® Z51
		Servo hydraulic	●	●	●								
Turcon® Stepseal® V	39	Mobile hydraulics	●	●	●	7425/2	19-2600	X		-45/ +200	15	50	Turcon® M12
		Construction equipment	●	●	●								
		Presses	●	●	●							50	Turcon® T46
		Injection moulding machines	●	●	●								
Zurcon® Rimseal	53	Mobile hydraulics	●	●	●	7425/2	8-2200	X		-45/ +110	In tandem with Turcon® Stepseal® 2K 5m/s	In tandem 60 MPa As single seal 25 MPa	Zurcon® Z52
		Standard cylinders	●	●	●								
		Machine tools	●	●	●								
		Injection moulding machines	●	●	●								
		Presses	●	●	●								
Veepac CH	63	Presses	●	●	●	-	10-750	X		-30 to +130	0.5	40	Rubber fabric reinforced + POM
		Steel mills	●	●	●								
		Ship hydraulics	●	●	●								
		Scrape shears	●	●	●								
		Civil engineering	●	●	●								
		Continous casting	●	●	●								
		Special hydraulic cylinders	●	●	●								
		Water locks	●	●	●								
Veepac CH/ G5	79	Hydraulic cylinder		●	●	-	25-160	X		-30/ +130	0.5	40	Rubber fabric reinforced + POM
		Presses		●	●								
		Mining		●	●								
		Steel mills		●	●								
		Water locks		●	●								

* The data below are maximum values and cannot be used at the same time. The max. pressure depends on temperature and gap dimension.
** Temperature Range is depending on choise of elastomer material and Media.

Rod Seals

Seal		Application				Standard	Size Range	Ac-tion		Technical Data*			Recom-mended Seal Material
										Temp. Range **	Speed	Pressure	
Type	Page	Field of Application	Light	Medium	Heavy	ISO/DIN	mm	Single	Double	°C	m/s	MPa max.	
Selemaster SM	85	Hydraulic cylinder		●	●	-	15-335	X		-40/ +130	0.5	70	Rubber fabric reinforced + POM
		Presses		●	●								
		Mining		●	●								
		Steel mills		●	●								
		Water locks		●	●								
Balsele	93	Hydraulic cylinder	●	●		5597/1	10-1200	X		-30/ +130	0.5	25 With Back-up 40	Rubber fabric reinforced NBR
		Presses	●	●									
		Truck cranes	●	●									
Zurcon® L-Cup®	113	Hydraulic cylinder	●	●		5597/1	6-250	X		-35/ +110	0.5	40	Zurcon® Z20
		Tail lift cylinder	●	●									
		Steering cylinder	●	●									
U-Cup RU2	121	Hydraulic cylinder	●	●		5597/1	6-185	X		-35/ +110	0.5	40	Zurcon® Z20
		Telescopic cylinders	●	●									
		Mobile hydraulic	●	●									
U-Cup RU6	127	Hydraulic cylinder	●	●		7425/2	12-350	X		-35/ +110	0.5	25	Zurcon® Z20
		Industrial hydraulic	●	●									
		Mobile hydraulic	●	●									
U-Cup RU9	133	Hydraulic cylinder	●	●		5597/1	6-140	X		-35/ +110	0.5	40	Zurcon® Z20
		Industrial hydraulic	●	●									
		Mobile hydraulic	●	●									
Buffer Seal	141	Earthmoving Equipment		●	●	7425/2	40-140	X		-35/ +110	1	40 60 (peak)	Zurcon® Z20
		Mobile hydraulic		●	●								
		Construction Machinery		●	●								
Variseal® M2	149	High and low temperatures	●	●		AS4716	3-2600	X		-70/ +260	15	40	Turcon® T40
		Aggresive media	●	●								20	Turcon® T05
		Foodstuff	●	●									
VL Seal®	155	Automation	●	●	●	-	3-2600	X		-45/ +200	15	50	Turcon® M12
		Telescopic cylinders	●	●	●							50	Turcon® T46
		Valve stems	●	●	●		3-2200			45/ +110	2	25	Zurcon® Z52
		Down-hole tools	●	●	●								

* The data below are maximum values and cannot be used at the same time. The max. pressure depends on temperature and gap dimension.
** Temperature Range is depending on choise of elastomer material and Media.

Rod Seals

Seal		Application				Standard	Size Range	Ac-tion		Technical Data*			Recom-mended Seal Material
										Temp. Range **	Speed	Pressure	
Type	Page	Field of Application	Light	Medium	Heavy	ISO/DIN	mm	Single	Double	°C	m/s	MPa max.	
Glyd Ring® RG	167	Special cylinder	●	●	●	7425/2	3-2600		X	-45/ +200	15	50	Turcon® M12
		Pumps and valves	●	●	●							50	Turcon® T46
		Machine tools	●	●	●							20	Turcon® T05
		Servo equipment	●	●	●		3-2200			-45/ +110	2	60	Zurcon® Z51
Glyd Ring® T RT	181	Special cylinder	●	●	●	7425/2	3-2600		X	-45/ +200	15	50	Turcon® M12
		Pumps and valves	●	●	●								
		Machine tools	●	●	●							50	Turcon® T46
		Robotics/ manipulators	●	●	●								
		Presses	●	●	●		3-2200			-45/ +110	2	60	Zurcon® Z51
AQ-Seal® with Bean Seal	195	Hydraulics	●	●		7425/2	18-2200		X	-45/ +110	2	40	Turcon® M12
		Machine operation	●	●									
		Fluid/gas separation	●	●								40	Turcon® T46
		Holding cylinders	●	●									
AQ-Seal® 5 with Bean Seal	205	Hydraulics		●	●	-	32-2200		X	-45/ +110	2	50	Turcon® M12
		Fluid/gas separation		●	●								
		Mobile hydraulics		●	●							50	Turcon® T46
		Holding cylinders		●	●								
Wynseal M	215	Industrial hydraulics	●	●		7425/2	3-2600		X	-45/ +200	10	35	Turcon® M12
		Handling machinery	●	●			3-2200			-45/ +110	0.5	25	Zurcon® Z52
		Agriculture	●	●								45	Zurcon® Z51
Double Delta® RD	225	Valve stems	●	●		-	3-2600		X	-45/ +200	15	20	Turcon® T05
		Mini hydraulic	●	●								35	Turcon® M12
		Hydraulic tools	●	●								35	Turcon® T46

* The data below are maximum values and cannot be used at the same time. The max. pressure depends on temperature and gap dimension.
** Temperature Range is depending on choise of elastomer material and Media.

Redundant Sealing System

Sealing of environmentally harmful fluids has led Trelleborg Sealing Solutions to develop innovative sealing systems to meet the ever demanding industry specifications with regard to leak-free performance and high service life.

In heavy duty applications, leak free performance and high service life cannot be assured by a single sealing element; therefore, specially developed "system seals" are arranged in series, building a "tandem arrangement".

Each sealing element in a system has its specific function and their interaction needs to be secured to get a redundant sealing system.

The primary seal in PTFE based proprietary Turcon® material generates low friction and has an excelent wear and extrusion resistance under extreme working conditions. It allows a fine lubrication film passing this first barrier, ensuring the necessary lubrication of the secondary sealing element for long service life.

The "tandem arrangement" requires an outstanding back-pumping ability of the primary seal and the secondary seal, if a double acting scraper is installed. A combination of different sealing materials in a system, Turcon® and Zurcon®, (PTFE and Polyurethane) ensures the best sealing performance.

Trelleborg Sealing Solutions has pioneered work in this area and continues development of redundant sealing today.

Outstanding solutions to such applications have been the Turcon® Stepseal® 2K in tandem arrangement. A tandem sealing system can also be created by using e.g. Zurcon® Rimseal, Zurcon® L-Cup® or U-Cup as secondary sealing elements. Depending on type of secondary seal, a single- or double acting scraper completes the system, to offer the highest possible operation reliability, ensuring both adequate lubrication of the sealing system and a long service life.

The Figure 1 shows as an example a redundant sealing system consisting of Turcon® Stepseal® 2K, Zurcon® Rimseal and Rod Scraper DA 22 with corresponding wear ring arrangement.

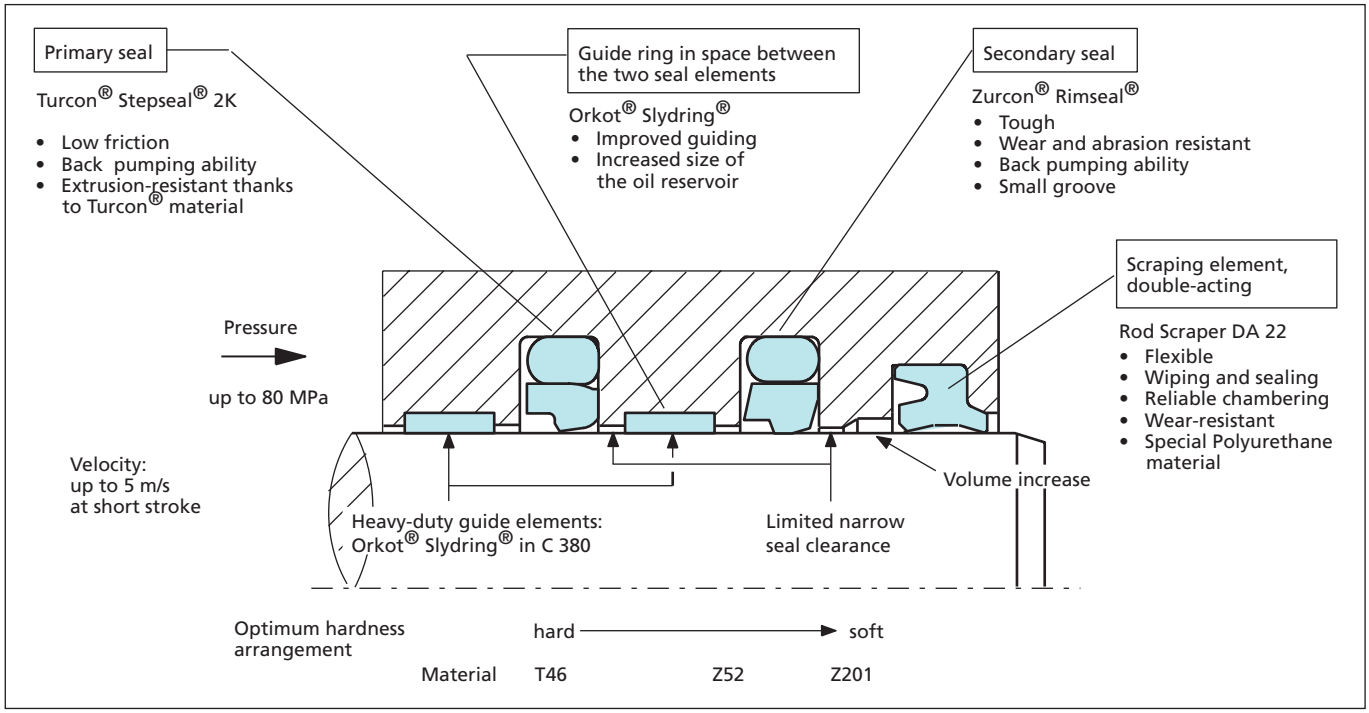

Figure 1 Example of a Redundant Modular Sealing System

■ Design Instructions

Lead-in Chamfers

In order to avoid damage to the rod seal during installation, lead-in chamfers and rounded edges must be provided on the piston rods (see Figure 2). If this is not possible for design reasons, a separate installation tool must be used.

The minimum length of the lead-in chamfer depends on the profile size of the seal and can be seen from the following tables.

Generally Δd_N min. from Table II, Table III and Table IV is recommended but Δd_N must also exceed 0.015 x rod diameter d_N (relevant for big diameter rods).

Table II Elastomer Energized Seals

Lead-in Chamfer Diameter reduction Δd min.	Groove Width L_1*
1.1	2.2
1.4	3.2
1.9	4.2
2.7	6.3
3.5	8.1
4.0	9.5
5.5	13.8

* The dimension L1 for the groove width can be found for all seal series in the appropriate table "Installation dimensions".

Table III U-Cups and Variseal®

Lead-in Chamfer Diameter reduction Δd min.	U-Cups Type RU0, RU2, RU3 and RU6 Groove Depth*	Turcon® Variseal® M2 Series
1.1	3.0 - 3.5 - 4.0	
1.1	5.0	
1.4	6.0 - 6.5	
2.2	7.5 - 8.0	RVA0
2.7	10.0	RVA1, RVA2
3.5	12.5	
4.0	15.0	RVA3
5.5	20.0	
6.5		RVA4

* The groove depth is calculated from: (d1 -d)/2. The dimensions for d1 and d can be found in the tables, "Installation dimensions".

Table IV Double Delta®

Lead-in Chamfer* Diameter reduction Δd min.	O-Ring Cross Section** d_2	
1.1	1.78	-
1.4	2.40	2.62
1.9	3.00	3.53
2.7	5.33	5.70
3.5	7.00	8.40

* Though not less than 1.5 % of service diameter (bore/rod diameter).

** The O-Ring cross section d_2 can be found in the appropriate table "Installation dimensions", from chapter Double Delta®.

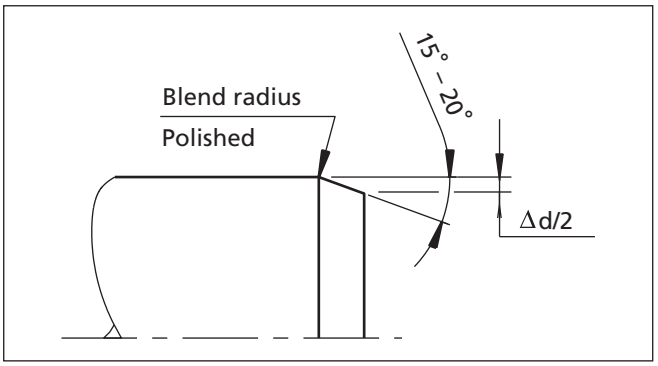

Figure 2 Lead-in chamfers

Distance between Grooves

When installing tandem seal arrangement or double-acting scraper seals in conjunction with rod seals with back pumping effects such as Turcon® Stepseal® 2K and Zurcon® Rimseal, we recommend the following arrangement:

- Distance between seal grooves and/or scraper seal groove L = at least groove depth X
- Oil reservoir for collecting the returning oil as shown in Figure 3.

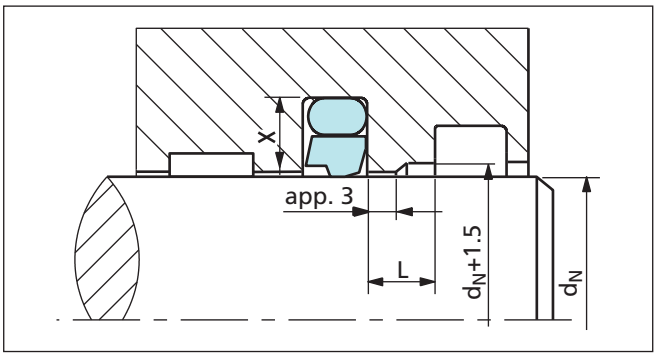

Figure 3 Recommendation for groove spacings between grooves

Surface Roughness DIN EN ISO 4287

The functional reliability and service life of a seal depend to a very great extent on the quality and surface finish of the mating surface to be sealed.

Scores, scratches, pores, concentric or spiral machining marks are not permitted. Higher demands must be made on the surface finish of dynamic surfaces than of static mating surfaces.

The characteristics most frequently used to describe the surface microfinish R_a, R_z and R_{max} are defined in DIN EN ISO 4287. These characterics alone, however, are not sufficient for assessing the suitability in seal technology. In addition the material contact area of the surface roughness profile R_{mr} in accordance with DIN EN ISO 4287 should be demanded. The significance of this surface specification is illustrated in Figure 4. It shows clearly that specification of R_a and R_z alone does not describe the surface roughness profile accurately enough for the seal technology and is thus not sufficient for assessing the suitability. The material contact area R_{mr} is essential for assessing surfaces, as this parameter is determined by the specific surface roughness profile. This in turn is directly dependent on the machining process employed.

Trelleborg Sealing Solutions recommends that the following surface finishes be observed:

Table V Surface Roughness

Surface Roughness µm			
Parameter	Mating Surface		Groove Surface
	Turcon® Materials	Zurcon® and Rubber	
R_{max}	0.63 - 2.50	1.00 - 4.00	< 16.0
$R_{z\ DIN}$	0.40 - 1.60	0.63 - 2.50	< 10.0
R_a	0.05 - 0.20	0.10 - 0.40	< 1.6

The material contact area R_{mr} should be approx. 50 to 70%, determined at a cut depth c = 0.25 x R_z, relative to a reference line of $C_{ref.}$ 5%.

Surface profile	R_a	R_z	R_{mr}
closed profile form	0.1	1.0	70%
open profile form 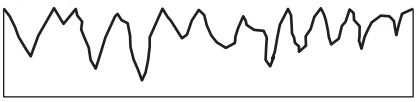	0.2	1.0	15%

Figure 4 Profile forms of surfaces

Figure 4 shows two surface profiles, both of which exhibit nearly the same value for R_z in the test procedure. The difference becomes obvious only when the material contact area of the surface roughness profiles are compared. These show that the upper roughness profile with R_{mr} = 70% has the better seal/mating surface ratio.

Hardware

For optimum performance Trelleborg Sealing Solutions recommends a piston rod of chrome-plated steel.

Material: preferably 42CrMo4V, purity class K3 to DIN 50602.

Induction hardened	min. HRC 45
Hardening depth	min. 2.5 mm

Ground and hard chrome-plated, coating thickness 20 to 30 µm, polished

Roughness	R_a 0.1 to 0.3 µm max. corresponding to N4 DIN/ISO 1302
Material contact area	R_{mr} = 50 to 70%
Cut depth	c = 0.25 x R_z

For other rod materials, special coatings and treatments please contact your local Trelleborg Sealing Solutions Company.

■ Installation Instructions

The following points should be observed before installation of the seals:

- Ensure the piston rod has a lead-in chamfer; if not, use an installation sleeve
- Deburr and chamfer or round sharp edges, cover the tips of screw threads
- Remove machining residues such as chips, dirt and other foreign particles and carefully clean all parts
- The seals can be installed more easily if the rod is greased or oiled. Attention must be paid to the compatibility of the seal materials with these lubricants. Use only grease without solid additives (e.g. molybdenum disulphide or zinc sulphide).
- Do not use tools with sharp edges.

Installation in Split Grooves

Installation in split grooves is problem free. The sequence of installation corresponds to the configuration of the seal, whereby the individual seal elements must not be allowed to twist. During final installation (insertion of the piston rod into the seal), elastomer or spring-energized seals must be sized. The piston rod itself can be used for this purpose, provided that it has a long lead-in chamfer, or use a sizing sleeve.

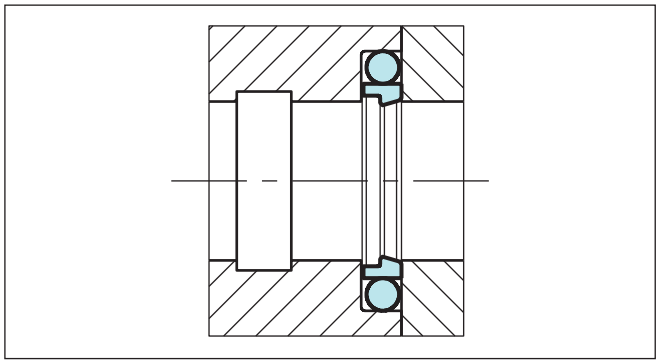

Figure 5 Installation in a split groove

Installation in Closed Grooves

By following the instructions in each seal type description (sizes for closed or split grooves) or using the light series for Turcon® seals, it will result in a problem free installation of our rod seal elements at small diameters.

For Zurcon® and polyurethane (not Turcon®) seals, the use of installation tools is to be recommended. If installation has to be performed without installation tools, however, the following points should be observed:

- Place the O-Ring into the groove (not necessary with U-Cups)
- Compress the Turcon® or Zurcon® seals into a kidney shape while avoiding sharp bends (Figure 6)!

When a rod seal with notches is folded in kidney shape, take care to avoid bending the seal at the position of the notches as this may cause overstretch or damage to the seal material.

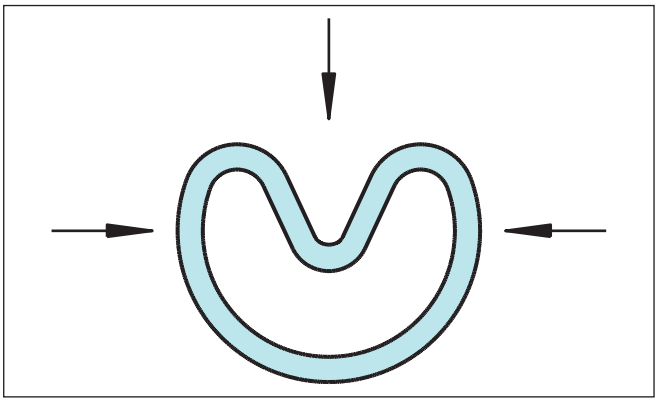

Figure 6 Kidney-shaped deformation of the seal ring

- Place the seal ring in compressed form into the groove and push against the O-Ring in the direction of the arrow (Figure 7).

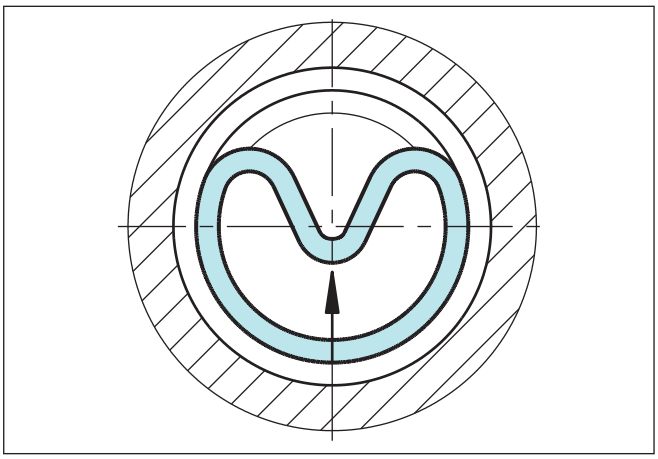

Figure 7 Inserting the seal ring into the closed groove

- After placing into the groove, form the seal into a ring again in the groove by hand.
- Finally size the seal ring using a mandrel which should have a chamfer of 15° to 20° over a length of approx. 30 mm

The sizing mandrel should be made from a polymer material (e.g. polyamide) with good sliding characteristics and high surface quality in order to avoid damage to the seals.

The piston rod itself can also be used for calibration, provided it has a sufficiently long lead-in chamfer.

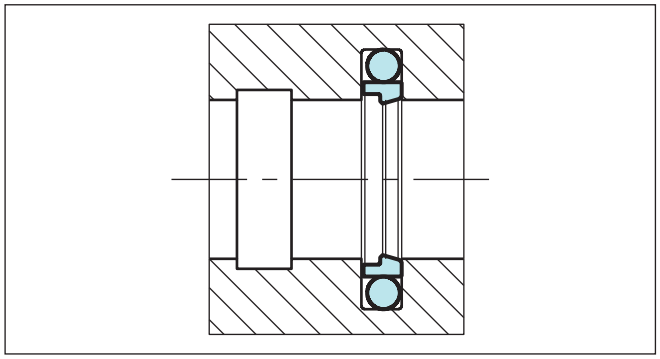

Figure 8 Installation in a closed groove

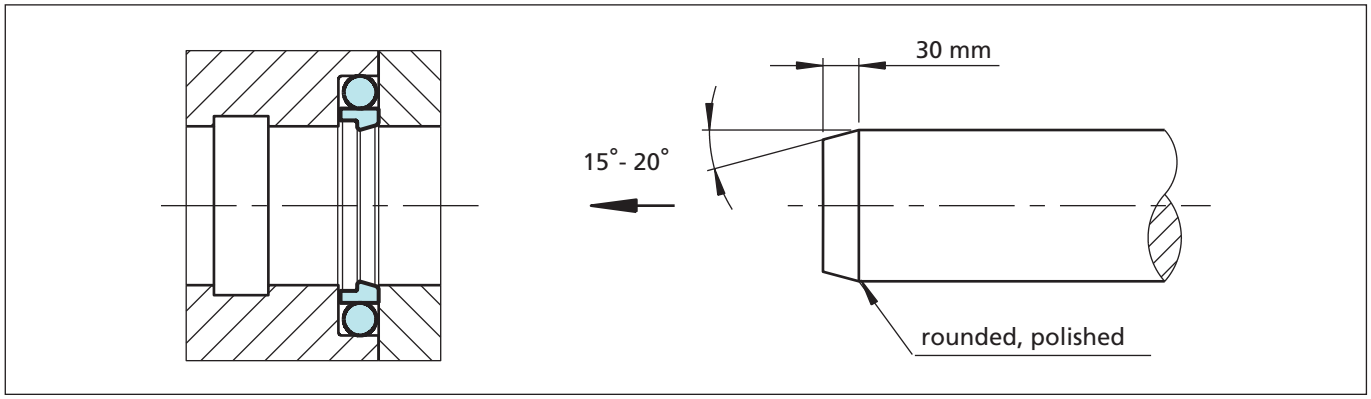

Figure 9 Calibration of the installed seal

Table VI Closed groove installation for Stepseal® 2K

Series	Stepseal® 2K can be installed in closed grooves above the following rod diameters and in the following Turcon® and Zurcon® materials * :	
	Rod Diameter $ød_N$ ≥	**Materials**
RSK0	12	Turcon® M12, T05, T08, T10, T29, T40 and T46. Zurcon® Z51 and Z80
RSK1	16	
RSK2	19	
RSK3	38	
RSK4	70	
RSK8	200	
RSK5	256	
RSK6	650	

* For dimensions under ø30 mm and/or not very accessible grooves it is often imperative to use installation tools. Ask for further information.

Installation of Turcon® VL Seal® in Closed Grooves

Installation in closed grooves is possible for diameters according to Table VII.

Table VII Closed groove installation for VL Seal®

VL Seal® for Rod		
Type	**Diameter**	
REL1	From	Ø30 mm
REL2	From	Ø30 mm
REL3	From	Ø50 mm
REL4	From	Ø80 mm
REL5	From	Ø125 mm
REL6	From	Ø400 mm

The O-Ring is inserted and positioned in the groove, where after the seal is folded and inserted in groove (Figure 10). The seal is folded out in the groove and is thereafter calibrated before the piston rod is inserted.

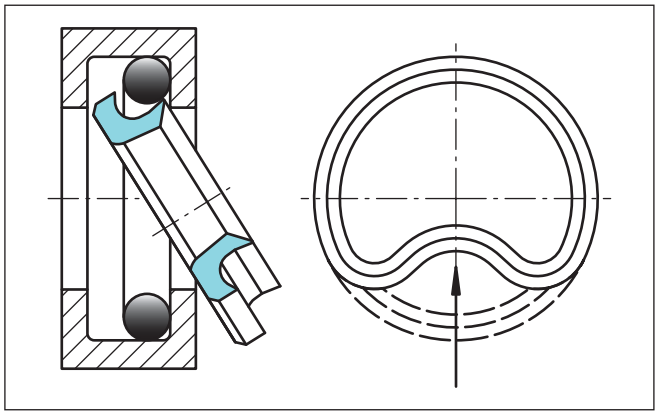

Figure 10 Installation of Rod VL Seal® in closed groove

Installation of Double Delta®

Installation in closed grooves is possible for diameters from 12 mm using the following procedure:

- Place the O-Ring into the groove.
- Compress the Turcon® seal into a kidney shape, while avoiding sharp bends (Figure 11). When a rod seal with notches is folded in kidney shape, take care to avoid bending the seal at the position of the notches as this may cause overstretch or damage to the seal material.
- Place the seal ring in compressed form into the groove and push against the O-Ring in the direction of the arrow in the groove by hand (Figure 12). For diameters smaller than 30 mm an inserter tube is recommended (Figure 13).
- Finally, size the seal ring using a mandrel which should have a chamfer of 10° to 15° over a length of min. 30 mm (Figure 14).

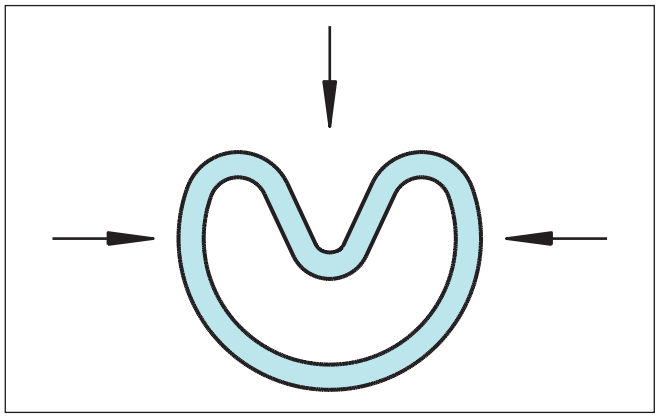

Figure 11 Kidney-shaped deformation

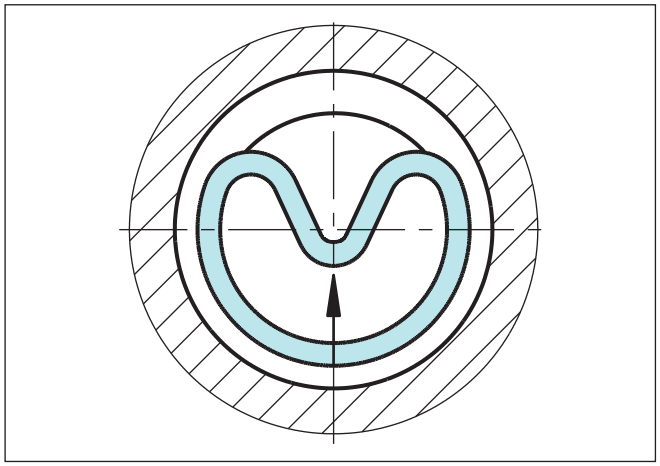

Figure 12 Inserting the seal ring into the closed groove

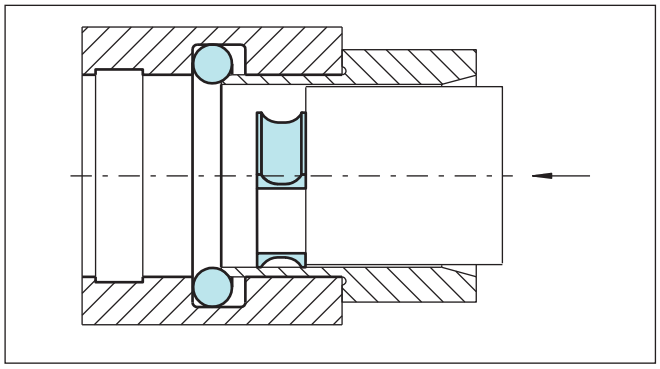

Figure 13 Insertion with an inserter tube

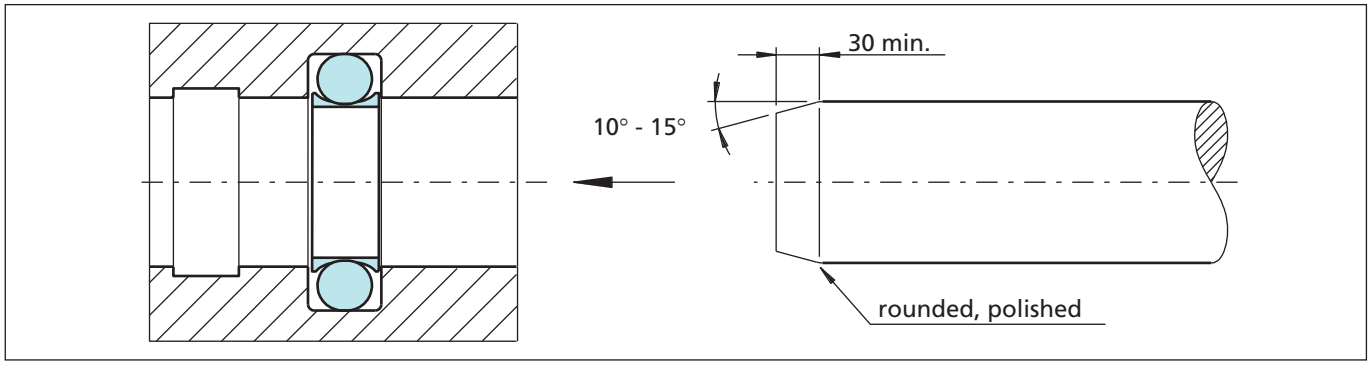

Figure 14 Calibration of the installed seal by means of a calibration mandrel

Installation of Spring Energized Seals

Turcon® Variseal® M2 seals should preferably be installed in split grooves.

Installation in half-open grooves is possible with a snap fitting. Figure 15 shows the design of the groove.

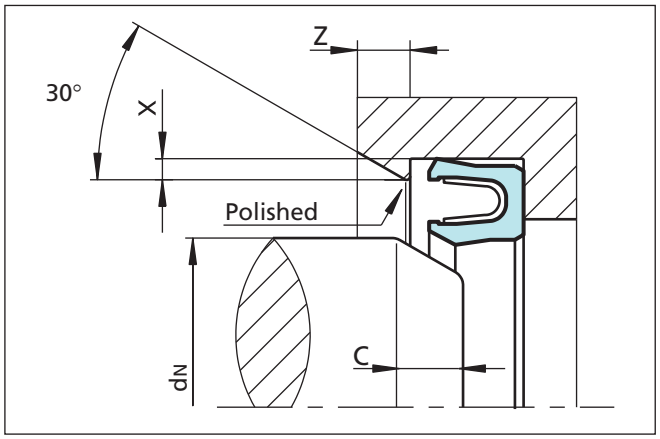

Figure 15 Installation in a half-open groove

Table VIII Installation in Half-Open Grooves

Serial-No.	X min.	d_N min.	Lenght C min.	Z min.
RVA0	0.4	12.0	4.0	2.5
RVA1	0.6	20.0	5.0	3.5
RVA2	0.7	30.0	5.0	3.5
RVA3	0.8	40.0	7.5	4.5
RVA4	0.9	55.0	12.0	7.5
RVA5	1.5	70.0	12.0	7.5

Further details, see Figure 61 and Table XXXVII.

In exceptional cases or with existing designs, an installation in closed grooves is also possible. The details in Table IX should be regarded as guide values for installation.

Table IX Installation in Closed Grooves

Serial-No.	d_N min.
RVA0	30.0
RVA1	70.0
RVA2	110.0
RVA3	300.0
RVA4	500.0
RVA5	800.0

■ Quality Criteria

The cost-effective use of seals and bearings is highly influenced by the quality criteria applied in production. Seals and bearings from Trelleborg Sealing Solutions are continuously monitored according to strict quality standards from material acquisition through to delivery.

Certification of our production plants in accordance with international standards QS 9000 / ISO 9000 meets the specific requirements for quality control and management of purchasing, production and marketing functions.

Our quality policy is consistently controlled by strict procedures and guidelines which are implemented within all strategic areas of the company.

All testing of materials and products is performed in accordance with accepted test standards and specifications,

e.g. random sample testing in accordance with DIN ISO 2859, part 1. Inspection specifications correspond to standards applicable to individual product groups (e.g. for O-Rings: ISO 3601).

Our sealing materials are produced free of chlorofluorinated hydrocarbons and carcinogenic elements.

The tenth digit of our part number defines the quality characteristics of the part. A hyphen indicates compliance with standard quality criteria outlined in this catalogue. Customer-specific requirements are indicated by a different symbol in this position. Customers who require special quality criteria should contact their local Trelleborg Sealing Solutions sales office for assistance. We have experience in meeting all Customer quality requirements.

■ Storage Instructions

Seals and bearings are often stored as spare parts for prolonged periods. Most rubbers change in physical properties during storage and ultimately become unserviceable due, e.g., to excessive hardening, softening, cracking, crazing or other surface degradation. These changes may be the result of particular factors or combination of factors, such as the action of deformation, oxygen, ozone, light, heat, humidity or oils and solvents.

With a few simple precautions, the shelf life of these products can be considerably lengthened.

Fundamental instructions on storage, cleaning and maintenance of elastomeric seal elements are described in international standards, such as:

DIN 7716 / BS 3F68: 1977,
ISO 2230, or
DIN 9088

The standards give several recommendations for the storage and the shelf life of elastomers, depending on the material classes.

The following recommendations are based on the several standards and are intended to provide the most suitable conditions for storage of rubbers. They should be observed to maintain the optimum physical and chemical values of the parts:

Heat

The storage temperature should preferable be between +5 °C and +25 °C. Direct contact with sources of heat such as boilers, radiators and direct sunlight should be avoided. If the storage temperature is below +15 °C, care should be taken to avoid distorting them during handling at that temperature as they may have stiffened. In this case the temperature of the articles should be raised to approximately +20 °C before they are put into service.

Humidity

The relative humidity in the store room should be below 70 %. Very moist or very dry conditions should be avoided. Condensation should not occur.

Light

Elastomeric seals should be protected from light sources, in particular direct sunlight or strong artificial light with an ultraviolet content. The individual storage bags offer the best protection as long as they are UV resistant. It is advisable to cover any windows of storage rooms with a red or orange coating or screen.

Radiation

Precaution should be taken to protect stored articles from all sources of ionising radiation likely to cause damage to stored articles.

Oxygen and ozone

Where possible, elastomeric materials should be protected from circulating air by wrapping, storage in airtight containers or by other suitable means.

As ozone is particular deleterious to some elastomeric seals, storage rooms should not contain any equipment that is capable of generating ozone, such as mercury vapour lamps, high voltage electrical equipment, electric motors or other equipment which may give rise to electric sparks or silent electrical discharges. Combustion gases and organic vapour should be excluded from storage rooms alas they may give rise to ozone via photochemical processe

Deformation

Elastomeric materials should, wherever possible, be stored in a relaxed condition free from tension, compression or other deformation. Where articles are packed in a strain-free condition they should be stored in their original packaging.

Contact with liquid and semi-solid materials

Elastomeric seals should not be allowed to come into contact with solvents, oils, greases or any other semi-solid materials at any time during storage, unless so packed by the manufacturer.

Contact with metal and non-metals

Direct contact with certain metals, e.g. manganese, iron and particularly copper and its alloys, e.g. brass and compounds of these materials are known to have deleterious effects on some rubbers. Elastomeric seals should not be stored in contact with such metals.

Because of possible transfer of plasticisers or other ingredients, rubbers must not be stored in contact with PVC. Different rubbers should preferably be separated from each other.

Cleaning

Where necessary, cleaning should be carried out with the aid of soap and water or methylated spirits. Water should not, however, be permitted to come into contact with fabric reinforced components, bonded seals (because of corrosion) or polyurethane rubbers. Disinfectants or other organic solvents as well as sharp-edged objects must not be used. The articles should be dried at room temperature and not placed near a source of heat.

Shelf life and shelf life control

The useful life of a elastomeric seals will depend to a large extend on the type of rubber. When stored under the recommended conditions (above sections) the below given shelf life of several materials should be considered.

AU, Thermoplastics	4 years
NBR, HNBR, CR	6 years
EPDM	8 years
FKM, VMQ, FVMQ	10 years
FFKM, Isolast®	18 years
PTFE, Turcon®	unlimited

Elastomeric seals should be inspected after the given period. After this giving an extension period is possible.

Rubber details and components less than 1.5 mm thick are liable to be more seriously affected by oxidation degradation even when stored in satisfactory conditions as recommended. Therefore they may be inspected and tested more frequently than it is mentioned above.

Rubber details / seals in assembled components

It is recommended that the units should be exercised at least every six months and that the maximum period a rubber detail be allowed to remain assembled within a stored unit, without inspection, be a total of the initial period stated above and the extension period. Naturally this will depend on the design of the unit concerned.

Turcon® Stepseal® 2K

Single Acting

Rubber Energized Plastic Faced Seal

Material:
Turcon® and Zurcon®

■ Turcon® Stepseal® 2K*

Description

Rod seals must exhibit no dynamic leakage to the atmosphere side under all operating conditions and must be statically completely leak tight when the machine is at a standstill. Furthermore, they should achieve a high degree of mechanical efficiency through low friction and be easy to install in small grooves. Costs and service life must meet the high expectations of the operator.

The rod seal Turcon® Stepseal® 2K comes closest to satisfying these ideal demands. Since the first Stepseal® was patented and introduced to the market in 1972, Trelleborg Sealing Solutions has maintained the series as technically outstanding seal elements through continuous innovative further development of the design and of the Turcon® and Zurcon® materials. Turcon® Stepseal® 2K continues the tradition for improvement.

With the introduction of Stepseal® it was possible for the first time to arrange several seals, one behind the other, thus allowing statically and dynamically tight double-acting tandem seal configurations to be created, without any disturbing build-up of intermediate pressure. The single-acting seal element is made of high-grade Turcon® or Zurcon® materials with outstanding sliding and wear resistance properties. It is installed according to ISO 7425/2 and Trelleborg Sealing Solutions standard grooves, using an O-Ring as energizing element.

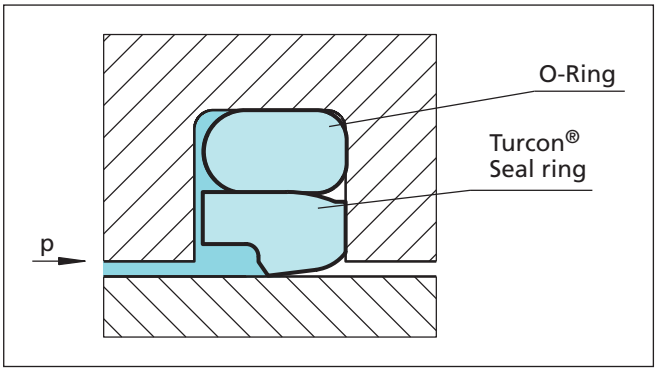

Figure 16 Turcon® Stepseal® 2K

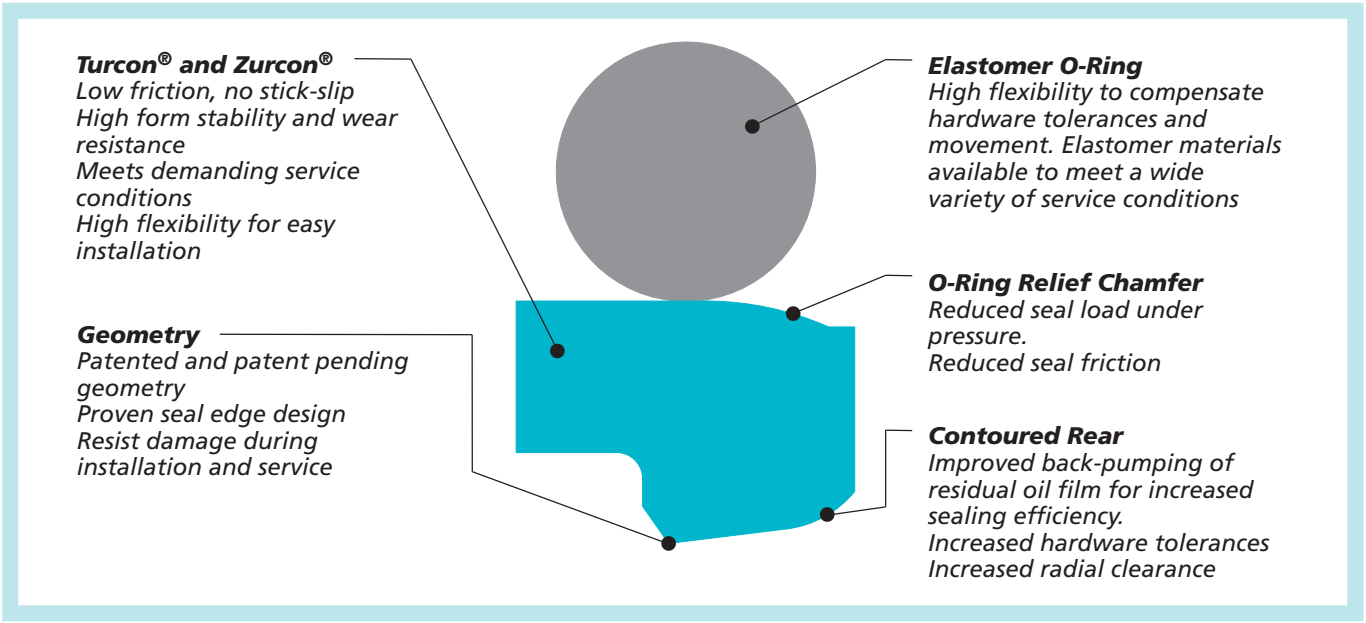

* Patented and patent pending geometry

Method of operation

The sealing performance of Stepseal® 2K (Figure 16) results from the hydrodynamic properties of the seal. The classic Stepseal® seal edge creates a steep contact pressure gradient on the high pressure side and a shallow contact pressure gradient on the low pressure side. The controlled pressure gradients minimizes fluid adherence to the piston rod during the extending stroke, and enables residual fluid film on the rod to be returned into the system on the return stroke. This is united with new patented and patent applied design features which further improve the performance of Stepseal® 2K under severe service conditions.

The O-Ring relief chamfer reduces pressure loading on the seal, whereby contact with the rod is optimised and sealing performance is improved at high service pressures. The special high-lift rear chamfer combines a smooth downstream sealing face with the ability to meet large radial clearances and hardware tolerances.

Stepseal® 2K gives high static and dynamic sealing performance, and the build-up of intermediate pressure often found with tandem seal configurations (see Figure 17) is efficiently suppressed.

Increased Clearance

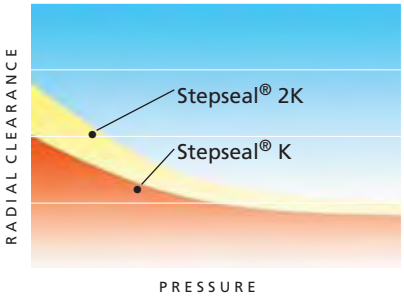

Turcon® Stepseal® 2K possesses superior extrusion resistance under all service conditions and allows hardware clearance to be significantly increased.

Improved Friction Performance

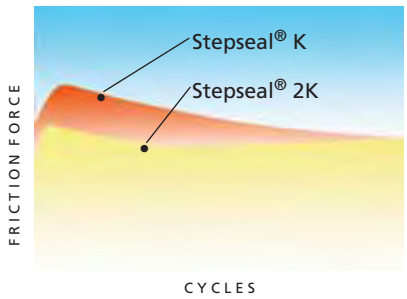

Turcon® Stepseal® 2K offers a uniform, low-friction characteristic, throughout its life, including the run in period.

Advantages

- High static and dynamic sealing effect
- High extrusion resistance, meets high hardware clearances
- Low friction, high efficiency
- Stick-slip free starting, no sticking
- High abrasion resistance, high operational reliability
- Wide range of application temperatures and high resistance to chemicals, depending on the choice of O-Ring material
- Simple installation without seal edge deformation
- Available for all diameters up to 2.600 mm rod dia.

Technical data

Operating conditions:

Pressure:	Up to 60 MPa
Speed:	Up to 15 m/s with reciprocating movements, frequency up to 5 Hz
Temperature:	-45 °C to +200 °C (depending on O-Ring material)
Media:	Mineral oil-based hydraulic fluids, flame retardant hydraulic fluids, environmentally safe hydraulic fluids (bio-oils), phosphate ester, water and others, depending on the O-Ring material compatibility (see Table XI)
Clearance:	The maximum permissible radial clearance S_{max} is shown in Table XII, as a function of the operating pressure and functional diameter.

Important Note:
The above data are maximum values and cannot be used at the same time. e.g. the maximum operating speed depends on material type, pressure, temperature and gap value.
Temperature range also dependent on medium.

Materials

The following material combinations have proven effective for hydraulic applications:

All round material for hydraulic applications with reciprocating, short stroke or helical movements in mineral oils, flame retardant hydraulic fluids HFC, phosphate ester, bio-oils or fluids having less satisfactory lubricating properties:

Turcon® Stepseal® 2K:	Turcon® M12	
O-Ring:	NBR, 70 Shore A	N
	FKM, 70 Shore A	V
Set code:	M12N or M12V	

For medium to heavy applications with reciprocating movements in mineral oils and other media with good lubrication:

Turcon® Stepseal® 2K:	Turcon® T46	
O-Ring:	NBR, 70 Shore A	N
	FKM, 70 Shore A	V
Set code:	T46N or T46V	

For specific applications, all Turcon® materials are available.

Other viable material combinations are listed in Table XI.

Series

Different cross-section sizes are recommended as a function of the seal diameters.

Table XII, shows the relationship between the series number according to the seal diameter range and the different application class sizes. These application classes are:

Standard application:	General applications in which no exceptional operating conditions exist.
Light application:	Applications with demands for reduced friction or for smaller grooves.
Heavy-duty application:	For exceptional operating loads such as high pressures, pressure peaks, etc.

Table X Available range

Series No.	Rod Diameter d_N f8/h9
RSK00	2.0 - 130.0
RSK10	6.0 - 250.0
RSK20	10.0 - 450.0
RSK30	12.0 - 650.0
RSK40	38.0 - 650.0
RSK80	200.0 - 999.9
RSK50	256.0 - 999.9
RSK5X	1000.0 - 1200.0
RSK60	650.0 - 999.9
RSK6X	1000.0 - 2600.0

For the recommended range see Table XII.

Application Examples

- Mobile hydraulic
- Construction Equipment
- Mining
- Standard cylinders
- Machine tools
- Injection moulding machines
- Presses
- Clamp cylinders
- Wind Turbines
- Automobile industry
- Shock absorbers
- Hydraulic hammers
- Servo hydraulics

Redundant Sealing System

In many applications, secondary seal systems are demanded. Figure 17 shows such a tandem configuration with the Stepseal® 2K.

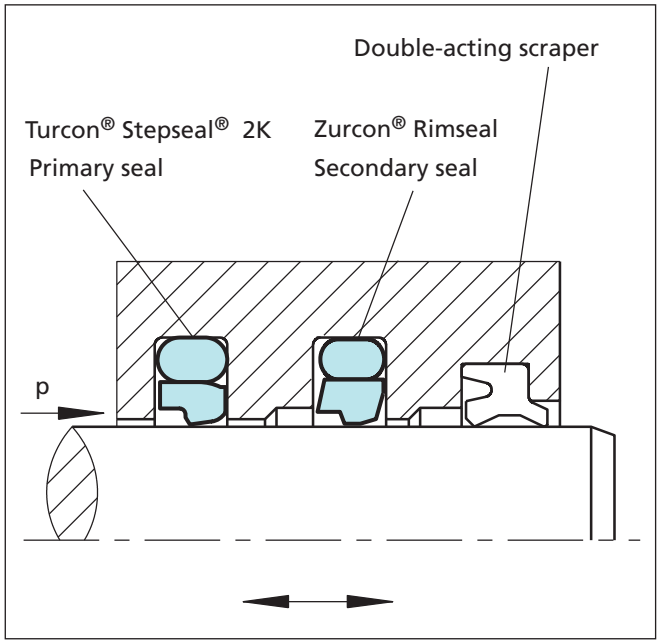

Figure 17 Turcon® Stepseal® 2K and Zurcon® Rimseal in tandem configuration

In this configuration it must be noted that a sufficiently large space is formed between the seals to take the hydraulic fluid, as shown in the figure.

Depending on the application and the operating conditions, the combination of different materials offers a further improvement in the sealing efficiency and the service life of the system, e.g. in hydraulic cylinders subject to high loads and under rough operating conditions, the primary seal should be made of Turcon® and the secondary seal of Zurcon® .

Stepseal® 2K elements should always be used in combination with a double-acting scraper to provide an optimum sealing effect.

The scraper Turcon® Excluder® 2, Turcon® Excluder® 5, Turcon® Excluder® F, Zurcon® Excluder® 500, DA17, DA22 and DA24 are well suited to such applications. For further details, please refer to our "Scrapers" catalogue.

Table XI Turcon® and Zurcon® Materials for Stepseal® 2K

Material, Applications, Properties	Code	O–Ring Material Shore A	Code	O-Ring Operating Temp.*°C	Mating Surface Material	MPa max. Dyna-mic
Turcon® M12 First material choice for seals in linear motion Overall improved properties For new constructions and updating For all commonly applied hydraulic fluids including fluids with low lubrication performance Lowest friction and best sliding properties Lowest wear on seals Improved absorption of abrasive contaminants No wear or abrasion of counter surface Mineral fibre and Additives filled Colour: Dark grey	M12	NBR- 70	N	-30 to +100	Steel Steel hardened Steel chrome plated (rod) Steel plated (rod) Cast iron Stainless steel Titanium	50
		NBR- Low temp.	T	-45 to +80		
		FKM- 70	V	-10 to +200		
Turcon® T05 For lubricating fluids Also for gas service Very low friction Very good sliding and sealing properties Colour: Turquoise	T05	NBR- 70	N	-30 to +100	Steel Steel hardened Steel chrome plated (rod)	20
		NBR- 70 Low temp.	T	-45 to +80		
		FKM- 70	V	-10 to +200		
Turcon® T08 For lubricating fluids and linear motion Very high compressive strength and extrusion resistance Hard counter surfaces is recommended Bronze filled Colour: Light to dark brown, which may have variations in shading	T08	NBR- 70	N	-30 to +100	Steel hardened Steel chrome plated (rod) Cast iron	60
		NBR- 70 Low temp.	T	-45 to +80		
		FKM- 70	V	-10 to +200		
Turcon® T10 For hydraulic and pneumatic For lubricating and non-lubricating fluids High extrusion resistance Good chemical resistance Not for electrically conducting fluids BAM tested Carbon, graphite filled Colour: Black	T10	NBR- 70	N	-30 to +100	Steel Steel hardened Steel chrome plated (rod) Stainless steel	40
		NBR- 70 Low temp.	T	-45 to +80		
		FKM- 70	V	-10 to +200		
		EPDM- 70	E**	-45 to +145		
Turcon® T29 For lubricating and non-lubricating fluids Good extrusion resistance Surface texture is not suitable for gas sealing Not for electrically conducting fluids Carbon fibre filled Colour: Grey	T29	NBR- 70	N	-30 to +100	Steel Steel hardened Steel chrome plated (rod) Cast iron Stainless steel	30
		NBR- 70 Low temp.	T	-45 to +80		
		FKM- 70	V	-10 to +200		
		EPDM- 70	E**	-45 to +145		
Turcon® T40 For lubricating and non-lubricating fluids High frequency and short strokes **Water hydraulics** Surface texture is not suitable for gas sealing Carbon fibre filled Colour: Grey.	T40	NBR- 70	N	-30 to +100	Steel Steel hardened Steel chrome plated (rod) Cast iron Stainless steel Aluminium	25
		NBR- 70 Low temp.	T	-45 to +80		
		FKM- 70	V	-10 to +200		
		EPDM- 70	E**	-45 to +145		

* The O-Ring Operation Temperature is only valid in mineral hydraulic oil (except EPDM). ** Material not suitable for mineral oils. *** Max. ø 2200 BAM: Tested by "Bundesanstalt Materialprüfung, Germany". Highlighted materials are standard.

Material, Applications, Properties	Code	O–Ring Material Shore A	Code	O-Ring Operating Temp.*°C	Mating Surface Material	MPa max. Dynamic
Turcon® T46 For lubricated hydraulics in linear motion High compressive strength High extrusion resistance Very good sliding and wear properties BAM tested Bronze filled Colour: Light to dark brown, which may have variations in shading.	T46	NBR- 70	N	-30 to +100	Steel hardened Steel chrome plated (rod) Cast iron	50
		NBR- 70 Low temp.	T	-45 to +80		
		FKM- 70	V	-10 to +200		
Zurcon® Z51*** For mineral oil based fluids **Very high abrasion and extrusion resistance** For counter surface with rougher surface finish Limited chemical resistance Max. working temperature 110 °C Cast polyurethane Colour: Yellow to light-brown.	Z51	NBR- 70	N	-30 to +100	Steel Steel hardened Steel chrome plated (rod) Cast iron Stainless steel Ceramic coating	60
		NBR- 70 Low temp.	T	-45 to +80		
Zurcon® Z80 For lubricating and non-lubricating fluids Water based fluids, air and gases Dry air pneumatics High abrasion and extrusion resistance For service in abrasive conditions and media with particles Good chemical resistance Limited temperature capability (-60 to +80 °C) UHMWPE (Ultra High Molecular Weight Polyethylene) Colour: White to off-white.	Z80	NBR- 70	N	-30 to +(100)	Steel Steel hardened Steel chrome plated (rod) Stainless steel Aluminium Ceramic coating	35
		NBR- 70 Low temp.	T	-45 to +80		
		EPDM- 70	E**	-45 to(+145)		

* The O-Ring Operation Temperature is only valid in mineral hydraulic oil (except EPDM). ** Material not suitable for mineral oils. *** Max. ø 2200 BAM: Tested by "Bundesanstalt Materialprüfung, Germany". Highlighted materials are standard.

■ Installation Recommendation

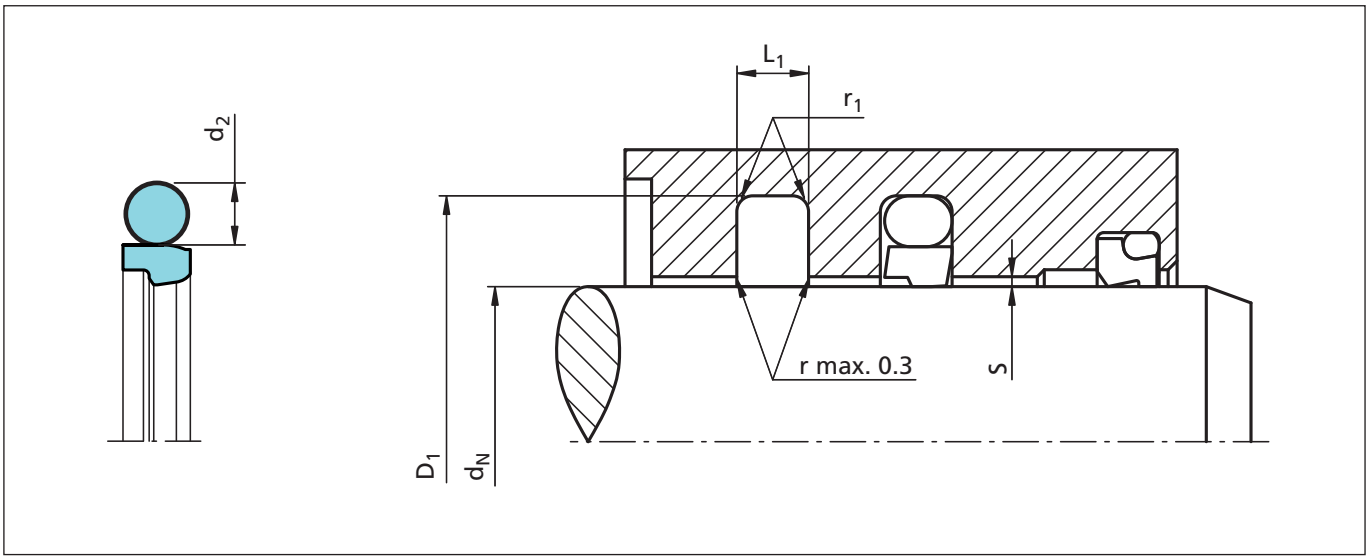

Figure 18 Installation drawing

Table XII Installation dimensions - Standard recommendations

Series No.	Rod Diameter d_N f8/h9			Groove Diameter	Groove Width	Radius	Radial Clearance S max. *			O-Ring Cross-Section
	Standard Application	Light[1] Application	Heavy Duty Application	D_1 H9	L_1 +0.2	r_1	10 MPa	20 MPa	40 MPa	d_2
RSK0	3 - 7.9	8 - 18.9	-	d_N + 4.9	2.2	0.4	0.30	0.20	0.15	1.78
RSK1	8 - 18.9	19 - 37.9	-	d_N + 7.3	3.2	0.6	0.40	0.25	0.15	2.62
RSK2	19 - 37.9	38 - 199.9	8 - 18.9	d_N + 10.7	4.2	1.0	0.50	0.30	0.20	3.53
RSK3	38 - 199.9	200 - 255.9	19 - 37.9	d_N + 15.1	6.3	1.3	0.70	0.40	0.25	5.33
RSK4	200 - 255.9	256 - 649.9	38 - 199.9	d_N + 20.5	8.1	1.8	0.80	0.60	0.35	7.00
RSK8	256 - 649.9	650 - 999.9	200 - 255.9	d_N + 24.0	8.1	1.8	0.90	0.70	0.40	7.00
RSK5	650 - 999.9	1000 - 1200	256 - 649.9	d_N + 27.3	9.5	2.5	1.00	0.80	0.50	8.40
RSK6	≥ 1000 **	-	650 - 999.9	d_N + 38.0	13.8	3.0	1.20	0.90	0.60	12.00

* At pressures > **40 MPa:** Use diameter tolerance H8/f8 (bore/rod) in the area behind the seal; or consult TSS for alternative material or profiles. TSS Slydring®/Wear Rings are not applicable at very small radial clearance; please consult the Slydring® catalog.

** All O-Rings with 12 mm cross section are delivered as a special profile ring.

[1] For easier installation in closed grooves with small rod diameters (< 40 mm).

Ordering example

Turcon® Stepseal® 2K complete with O-Ring, standard application, Series RSK4 (from Table XII).

Rod diameter: d_N = 250.0 mm
TSS Part No.: RSK402500 (from Table XIII)

Select the material from Table XI. The corresponding code numbers are appended to the TSS Part No. (from Table XIII). Together these form the TSS Article Number. The TSS Article Number for all intermediate sizes not shown in Table XIII can be determined following the example below.
** For diameters ≥ 1000.0 mm multiply only by factor 1.
Example: RSK6 for diameter 1200.0 mm. TSS Article No.: RSK6**X1200** -M12N.

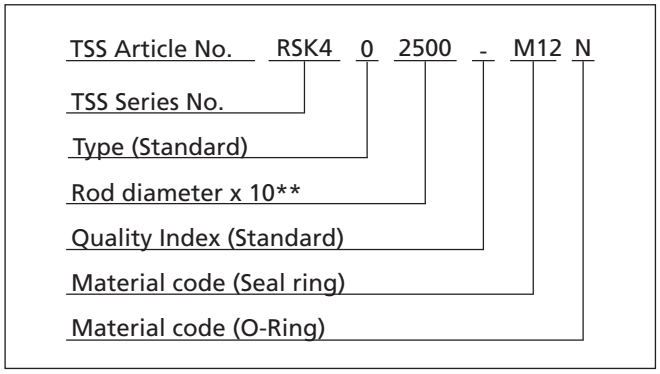

Table XIII Installation dimensions / TSS Part No.

Rod	Groove Diameter	Groove Width	TSS Part No.	O-Ring Size
d_N f8/h9	D_1 H9	L_1 +0.2		
3.0	7.9	2.2	RSK000030	4.47 x 1.78
4.0	**8.9**	2.2	**RSK000040**	**5.6 x 1.8**
5.0	**9.9**	2.2	**RSK000050**	**6.7 x 1.8**
6.0	**10.9**	**2.2**	**RSK000060**	**7.65 x 1.78**
7.0	11.9	2.2	RSK000070	8.75 x 1.8
8.0	**12.9**	**2.2**	**RSK000080**	**9.5 x 1.8**
8.0	**15.3**	**3.2**	**RSK100080**	**10.77 x 2.62**
9.0	13.9	2.2	RSK000090	10.82 x 1.78
9.0	16.3	3.2	RSK100090	10.77 x 2.62
10.0	**14.9**	**2.2**	**RSK000100**	**11.8 x 1.8**
10.0	**17.3**	**3.2**	**RSK100100**	**12.37 x 2.62**
12.0	**16.9**	**2.2**	**RSK000120**	**14.00 x 1.78**
12.0	**19.3**	**3.2**	**RSK100120**	**13.94 x 2.62**
12.7	17.6	2.2	RSK000127	14.00 x 1.78
12.7	20.0	3.2	RSK100127	15.54 x 2.62
14.0	**18.9**	**2.2**	**RSK000140**	**15.60 x 1.78**
14.0	**21.3**	**3.2**	**RSK100140**	**17.12 x 2.62**
15.0	19.9	2.2	RSK000150	17.17 x 1.78
15.0	22.3	3.2	RSK100150	17.12 x 2.62
16.0	20.9	2.2	RSK000160	17.17 x 1.78
16.0	**23.3**	**3.2**	**RSK100160**	**18.72 x 2.62**
17.0	21.9	2.2	RSK000170	18.77 x 1.78
18.0	22.9	2.2	RSK000180	18.77 x 1.78
18.0	**25.3**	**3.2**	**RSK100180**	**20.29 x 2.62**

The rod diameters in **bold** type are in accordance with the recommendations of ISO 3320.
Other dimensions and all intermediate sizes up to 2600 mm diameter including imperial (inch) sizes can be supplied.
All O-Rings with 12 mm cross section are delivered as special profilring.

Rod	Groove Diameter	Groove Width	TSS Part No.	O-Ring Size
d_N f8/h9	D_1 H9	L_1 +0.2		
19.0	29.7	4.2	RSK200190	23.40 x 3.53
20.0	**27.3**	**3.2**	**RSK100200**	**21.89 x 2.62**
20.0	**30.7**	**4.2**	**RSK200200**	**23.40 x 3.53**
22.0	**29.3**	**3.2**	**RSK100220**	**25.07 x 2.62**
22.0	**32.7**	**4.2**	**RSK200220**	**26.58 x 3.53**
24.0	31.3	3.2	RSK100240	26.64 x 2.62
25.0	**32.3**	**3.2**	**RSK100250**	**28.24 x 2.62**
25.0	**35.7**	**4.2**	**RSK200250**	**29.75 x 3.53**
25.4	32.7	3.2	RSK100254	28.24 x 2.62
25.4	36.1	4.2	RSK200254	29.75 x 3.53
26.0	33.3	3.2	RSK100260	28.24 x 2.62
26.0	36.7	4.2	RSK200260	29.75 x 3.53
28.0	35.3	3.2	RSK100280	29.82 x 2.62
28.0	**38.7**	**4.2**	**RSK200280**	**32.92 x 3.53**
28.575	35.875	3.2	RSK100286	31.42 x 2.62
30.0	37.3	3.2	RSK100300	32.99 x 2.62
30.0	40.7	4.2	RSK200300	34.52 x 3.53
32.0	39.3	3.2	RSK100320	34.59 x 2.62
32.0	**42.7**	**4.2**	**RSK200320**	**36.09 x 3.53**
35.0	42.3	3.2	RSK100350	37.77 x 2.62
35.0	45.7	4.2	RSK200350	37.69 x 3.53
36.0	43.3	3.2	RSK100360	39.34 x 2.62
36.0	**46.7**	**4.2**	**RSK200360**	**40.87 x 3.53**
37.0	44.3	3.2	RSK100370	39.34 x 2.62
37.0	47.7	4.2	RSK200370	40.87 x 3.53
38.0	48.7	4.2	RSK200380	40.87 x 3.53
38.0	53.1	6.3	RSK300380	43.82 x 5.33
40.0	**50.7**	**4.2**	**RSK200400**	**44.04 x 3.53**
40.0	**55.1**	**6.3**	**RSK300400**	**43.82 x 5.33**
42.0	52.7	4.2	RSK200420	47.22 x 3.53
42.0	57.1	6.3	RSK300420	46.99 x 5.33
43.0	53.7	4.2	RSK200430	47.22 x 3.53
44.45	59.55	6.3	RSK300444	50.17 x 5.33
45.0	**55.7**	**4.2**	**RSK200450**	**50.39 x 3.53**
45.0	**60.1**	**6.3**	**RSK300450**	**50.17 x 5.33**
48.0	58.7	4.2	RSK200480	51.5 x 3.55

The rod diameters in **bold** type are in accordance with the recommendations of ISO 3320.
Other dimensions and all intermediate sizes up to 2600 mm diameter including imperial (inch) sizes can be supplied.
All O-Rings with 12 mm cross section are delivered as special profilring.

Rod	Groove Diameter	Groove Width	TSS Part No.	O-Ring Size
d_N f8/h9	D_1 H9	L_1 +0.2		
48.0	63.1	6.3	RSK300480	53.34 x 5.33
50.0	**60.7**	**4.2**	**RSK200500**	**53.57 x 3.53**
50.0	**65.1**	**6.3**	**RSK300500**	**56.52 x 5.33**
50.8	61.5	4.2	RSK200508	53.57 x 3.53
50.8	65.9	6.3	RSK300508	56.52 x 5.33
52.0	62.7	4.2	RSK200520	56.74 x 3.53
52.0	67.1	6.3	RSK300520	56.52 x 5.33
54.0	69.1	6.3	RSK300540	59.69 x 5.33
55.0	65.7	4.2	RSK200550	59.92 x 3.53
55.0	70.1	6.3	RSK300550	59.69 x 5.33
56.0	**66.7**	**4.2**	**RSK200560**	**59.92 x 3.53**
56.0	**71.1**	**6.3**	**RSK300560**	**62.87 x 5.33**
56.0	76.5	8.1	RSK400560	63 x 7.0
57.0	72.1	6.3	RSK300570	62.87 x 5.33
59.0	69.7	4.2	RSK200590	63.09 x 3.53
60.0	70.7	4.2	RSK200600	63.09 x 3.53
60.0	75.1	6.3	RSK300600	66.04 x 5.33
63.0	**73.7**	**4.2**	**RSK200630**	**66.27 x 3.53**
63.0	**78.1**	**6.3**	**RSK300630**	**69.22 x 5.33**
63.5	78.6	6.3	RSK300635	69.22 x 5.33
65.0	75.7	4.2	RSK200650	69.44 x 3.53
65.0	80.1	6.3	RSK300650	69.22 x 5.33
67.0	77.7	4.2	RSK200670	72.62 x 3.53
69.0	84.1	6.3	RSK300690	75.57 x 5.33
70.0	80.7	4.2	RSK200700	75.79 x 3.53
70.0	**85.1**	**6.3**	**RSK300700**	**75.57 x 5.33**
70.0	90.5	8.1	RSK400700	78 x 7.0
72.0	82.7	4.2	RSK200720	75.79 x 3.53
73.0	88.1	6.3	RSK300730	78.74 x 5.33
75.0	85.7	4.2	RSK200750	78.97 x 3.53
75.0	90.1	6.3	RSK300750	81.92 x 5.33
76.2	91.3	6.3	RSK300762	81.92 x 5.33
78.0	93.1	6.3	RSK300780	85.09 x 5.33
80.0	90.7	4.2	RSK200800	85.32 x 3.53
80.0	**95.1**	**6.3**	**RSK300800**	**85.09 x 5.33**
80.0	100.5	8.1	RSK400800	88 x 7.0

The rod diameters in **bold** type are in accordance with the recommendations of ISO 3320.
Other dimensions and all intermediate sizes up to 2600 mm diameter including imperial (inch) sizes can be supplied.
All O-Rings with 12 mm cross section are delivered as special profilring.

Rod	Groove Diameter	Groove Width	TSS Part No.	O-Ring Size
d_N f8/h9	D_1 H9	L_1 +0.2		
82.5	97.6	6.3	RSK300825	88.27 x 5.33
83.0	93.7	4.2	RSK200830	88.49 x 3.53
85.0	95.7	4.2	RSK200850	88.49 x 3.53
85.0	100.1	6.3	RSK300850	91.44 x 5.33
85.0	105.5	8.1	RSK400850	93 x 7.0
89.0	104.1	6.3	RSK300890	94.62 x 5.33
90.0	100.7	4.2	RSK200900	94.84 x 3.53
90.0	**105.1**	**6.3**	**RSK300900**	**94.62 x 5.33**
90.0	110.5	8.1	RSK400900	98 x 7.0
92.0	102.7	4.2	RSK200920	98.02 x 3.53
92.0	107.1	6.3	RSK300920	97.79 x 5.33
95.0	105.7	4.2	RSK200950	101.19 x 3.53
95.0	110.1	6.3	RSK300950	100.97 x 5.33
100.0	110.7	4.2	RSK201000	104.37 x 3.53
100.0	**115.1**	**6.3**	**RSK301000**	**107.32 x 5.33**
100.0	120.5	8.1	RSK401000	108 x 7.0
101.6	116.7	6.3	RSK301016	107.32 x 5.33
104.7	119.8	6.3	RSK301047	110.49 x 5.33
105.0	120.1	6.3	RSK301050	110.49 x 5.33
105.0	125.5	8.1	RSK401050	113.67 x 7.0
110.0	120.7	4.2	RSK201100	113.89 x 3.53
110.0	**125.1**	**6.3**	**RSK301100**	**116.84 x 5.33**
110.0	130.5	8.1	RSK401100	116.84 x 7.0
115.0	130.1	6.3	RSK301150	120.02 x 5.33
120.0	135.1	6.3	RSK301200	126.37 x 5.33
120.0	145.5	8.1	RSK401200	129.54 x 7.0
125.0	**140.1**	**6.3**	**RSK301250**	**129.54 x 5.33**
125.0	145.5	8.1	RSK401250	132.72 x 7.0
125.4	140.5	6.3	RSK301254	132.72 x 5.33
127.0	142.1	6.3	RSK301270	132.72 x 5.33
130.0	145.1	6.3	RSK301300	135.89 x 5.33
130.0	150.5	8.1	RSK401300	139.07 x 7.0
132.0	147.1	6.3	RSK301320	139.07 x 5.33
135.0	145.7	4.2	RSK201350	139.29 x 3.53
135.0	150.1	6.3	RSK301350	142.24 x 5.33
137.0	152.1	6.3	RSK301370	142.24 x 5.33

The rod diameters in **bold** type are in accordance with the recommendations of ISO 3320.
Other dimensions and all intermediate sizes up to 2600 mm diameter including imperial (inch) sizes can be supplied.
All O-Rings with 12 mm cross section are delivered as special profilring.

Rod	Groove Diameter	Groove Width	TSS Part No.	O-Ring Size
d_N f8/h9	D_1 H9	L_1 +0.2		
138.0	153.1	6.3	RSK301380	142.24 x 5.33
140.0	150.7	4.2	RSK201400	145.64 x 3.53
140.0	**155.1**	**6.3**	**RSK301400**	**145.42 x 5.33**
140.0	160.5	8.1	RSK401400	148.59 x 7.0
140.5	155.6	6.3	RSK301405	145.42 x 5.33
145.0	160.1	6.3	RSK301450	151.77 x 5.33
145.0	165.5	8.1	RSK401450	151.77 x 7.0
150.0	165.1	6.3	RSK301500	158.12 x 5.33
150.0	170.5	8.1	RSK401500	158.12 x 7.0
153.0	168.1	6.3	RSK301530	158.12 x 5.33
155.0	170.1	6.3	RSK301550	158.12 x 5.33
160.0	**175.1**	**6.3**	**RSK301600**	**164.47 x 5.33**
160.0	**180.5**	**8.1**	**RSK401600**	**170.82 x 7.0**
165.0	180.1	6.3	RSK301650	170.82 x 5.33
170.0	185.1	6.3	RSK301700	177.17 x 5.33
170.0	190.5	8.1	RSK401700	177.17 x 7.0
173.0	188.1	6.3	RSK301730	177.17 x 5.33
175.0	190.1	6.3	RSK301750	183.52 x 5.33
180.0	**195.1**	**6.3**	**RSK301800**	**183.52 x 5.33**
180.0	**200.5**	**8.1**	**RSK401800**	**189.87 x 7.0**
185.0	200.1	6.3	RSK301850	189.87 x 5.33
185.0	205.5	8.1	RSK401850	196.22 x 7.0
190.0	205.1	6.3	RSK301900	196.22 x 5.33
190.0	210.5	8.1	RSK401900	196.22 x 7.0
195.0	210.1	6.3	RSK301950	202.57 x 5.33
200.0	215.1	6.3	RSK302000	208.92 x 5.33
200.0	**220.5**	**8.1**	**RSK402000**	**208.92 x 7.0**
205.0	225.5	8.1	RSK402050	215.27 x 7.0
210.0	230.5	8.1	RSK402100	215.27 x 7.0
211.0	231.5	8.1	RSK402110	215.27 x 7.0
212.0	232.5	8.1	RSK402120	227.97 x 7.0
215.0	235.5	8.1	RSK402150	227.97 x 7.0
220.0	**240.5**	**8.1**	**RSK402200**	**227.97 x 7.0**
225.0	245.5	8.1	RSK402250	240.67 x 7.0
230.0	245.1	6.3	RSK302300	234.32 x 5.33
230.0	250.5	8.1	RSK402300	240.67 x 7.0

The rod diameters in **bold** type are in accordance with the recommendations of ISO 3320.
Other dimensions and all intermediate sizes up to 2600 mm diameter including imperial (inch) sizes can be supplied.
All O-Rings with 12 mm cross section are delivered as special profilring.

Rod	Groove Diameter	Groove Width	TSS Part No.	O-Ring Size
d_N f8/h9	D_1 H9	L_1 +0.2		
235.0	255.5	8.1	RSK402350	240.67 x 7.0
240.0	260.5	8.1	RSK402400	253.37 x 7.0
245.0	265.5	8.1	RSK402450	253.37 x 7.0
250.0	**270.5**	**8.1**	**RSK402500**	**266.07 x 7.0**
260.0	284.0	8.1	RSK802600	266.07 x 7.0
265.0	289.0	8.1	RSK802650	278.77 x 7.0
270.0	290.5	8.1	RSK402700	278.77 x 7.0
270.0	294.0	8.1	RSK802700	278.77 x 7.0
275.0	299.0	8.1	RSK802750	291.47 x 7.0
280.0	**304.0**	**8.1**	**RSK802800**	**291.47 x 7.0**
285.0	309.0	8.1	RSK802850	291.47 x 7.0
290.0	314.0	8.1	RSK802900	304.17 x 7.0
295.0	319.0	8.1	RSK802950	304.17 x 7.0
300.0	320.5	8.1	RSK403000	304.17 x 7.0
300.0	324.0	8.1	RSK803000	316.87 x 7.0
310.0	334.0	8.1	RSK803100	316.87 x 7.0
320.0	**344.0**	**8.1**	**RSK803200**	**329.57 x 7.0**
330.0	354.0	8.1	RSK803300	342.27 x 7.0
340.0	364.0	8.1	RSK803400	354.97 x 7.0
350.0	370.5	8.1	RSK403500	354.97 x 7.0
350.0	374.0	8.1	RSK803500	367.67 x 7.0
360.0	**384.0**	**8.1**	**RSK803600**	**367.67 x 7.0**
365.0	389.0	8.1	RSK803650	380.37 x 7.0
370.0	394.0	8.1	RSK803700	380.37 x 7.0
375.0	399.0	8.1	RSK803750	393.07 x 7.0
380.0	404.0	8.1	RSK803800	393.07 x 7.0
390.0	414.0	8.1	RSK803900	405.26 x 7.0
400.0	424.0	8.1	RSK804000	417.96 x 7.0
410.0	434.0	8.1	RSK804100	417.96 x 7.0
420.0	444.0	8.1	RSK804200	430.66 x 7.0
430.0	454.0	8.1	RSK804300	443.36 x 7.0
435.0	459.0	8.1	RSK804350	443.36 x 7.0
440.0	464.0	8.1	RSK804400	456.06 x 7.0
450.0	474.0	8.1	RSK804500	468.76 x 7.0
460.0	484.0	8.1	RSK804600	468.76 x 7.0
470.0	494.0	8.1	RSK804700	481.46 x 7.0

The rod diameters in **bold** type are in accordance with the recommendations of ISO 3320.
Other dimensions and all intermediate sizes up to 2600 mm diameter including imperial (inch) sizes can be supplied.
All O-Rings with 12 mm cross section are delivered as special profilring.

Rod	Groove Diameter	Groove Width	TSS Part No.	O-Ring Size
d_N f8/h9	D_1 H9	L_1 +0.2		
480.0	504.0	8.1	RSK804800	494.16 x 7.0
485.0	509.0	8.1	RSK804850	494.16 x 7.0
490.0	514.0	8.1	RSK804900	506.86 x 7.0
500.0	524.0	8.1	RSK805000	506.86 x 7.0
510.0	534.0	8.1	RSK805100	532.26 x 7.0
520.0	544.0	8.1	RSK805200	532.26 x 7.0
525.0	549.0	8.1	RSK805250	532.26 x 7.0
530.0	554.0	8.1	RSK805300	557.66 x 7.0
540.0	564.0	8.1	RSK805400	557.66 x 7.0
550.0	574.0	8.1	RSK805500	557.66 x 7.0
560.0	584.0	8.1	RSK805600	582.68 x 7.0
570.0	594.0	8.1	RSK805700	582.68 x 7.0
580.0	604.0	8.1	RSK805800	608.08 x 7.0
585.0	609.0	8.1	RSK805850	608.08 x 7.0
590.0	614.0	8.1	RSK805900	608.08 x 7.0
600.0	624.0	8.1	RSK806000	608.08 x 7.0
610.0	634.0	8.1	RSK806100	633.48 x 7.0
620.0	644.0	8.1	RSK806200	633.48 x 7.0
630.0	654.0	8.1	RSK806300	658.88 x 7.0
640.0	664.0	8.1	RSK806400	658.88 x 7.0
650.0	677.3	9.5	RSK506500	663 x 8.4
656.0	683.3	9.5	RSK506560	669 x 8.4
660.0	687.3	9.5	RSK506600	673 x 8.4
680.0	707.3	9.5	RSK506800	693 x 8.4
685.0	712.3	9.5	RSK506850	698 x 8.4
700.0	724.0	8.1	RSK807000	712 x 7.0
700.0	727.3	9.5	RSK507000	713 x 8.4
710.0	737.3	9.5	RSK507100	723 x 8.4
730.0	757.3	9.5	RSK507300	743 x 8.4
760.0	787.3	9.5	RSK507600	773 x 8.4
765.0	792.3	9.5	RSK507650	778 x 8.4
780.0	807.3	9.5	RSK507800	793 x 8.4
790.0	817.3	9.5	RSK507900	803 x 8.4
800.0	827.3	9.5	RSK508000	813 x 8.4
810.0	837.3	9.5	RSK508100	823 x 8.4
820.0	847.3	9.5	RSK508200	833 x 8.4

The rod diameters in **bold** type are in accordance with the recommendations of ISO 3320.
Other dimensions and all intermediate sizes up to 2600 mm diameter including imperial (inch) sizes can be supplied.
All O-Rings with 12 mm cross section are delivered as special profilring.

Rod	Groove Diameter	Groove Width	TSS Part No.	O-Ring Size
d_N f8/h9	D_1 H9	L_1 +0.2		
830.0	857.3	9.5	RSK508300	843 x 8.4
850.0	877.3	9.5	RSK508500	863 x 8.4
870.0	897.3	9.5	RSK508700	883 x 8.4
880.0	907.3	9.5	RSK508800	893 x 8.4
885.0	912.3	9.5	RSK508850	898 x 8.4
890.0	917.3	9.5	RSK508900	903 x 8.4
930.0	957.3	9.5	RSK509300	943 x 8.4
955.0	982.3	9.5	RSK509550	968 x 8.4
1000.0	1038.0	13.8	RSK6X1000	1016 x 12
1035.0	1073.0	13.8	RSK6X1035	1051 x 12
1040.0	1067.3	9.5	RSK5X1040	1053 x 8.4
1040.0	1078.0	13.8	RSK6X1040	1056 x 12
1050.0	1077.3	9.5	RSK5X1050	1063 x 8.4
1050.0	1088.0	13.8	RSK6X1050	1066 x 12
1100.0	1138.0	13.8	RSK6X1100	1116 x 12
1120.0	1147.3	9.5	RSK5X1120	1133 x 8.4
1120.0	1158.0	13.8	RSK6X1120	1136 x 12
1200.0	1227.3	9.5	RSK5X1200	1213 x 8.4
1200.0	1238.0	13.8	RSK6X1200	1216 x 12
1330.0	1368.0	13.8	RSK6X1330	1346 x 12
1500.0	1538.0	13.8	RSK6X1500	1516 x 12
1600.0	1638.0	13.8	RSK6X1600	1616 x 12
2000.0	2038.0	13.8	RSK6X2000	2016 x 12
2600.0	2638.0	13.8	RSK6X2600	2616 x 12

The rod diameters in **bold** type are in accordance with the recommendations of ISO 3320.
Other dimensions and all intermediate sizes up to 2600 mm diameter including imperial (inch) sizes can be supplied.
All O-Rings with 12 mm cross section are delivered as special profilring.

■ Installation according to ISO 7425, Part 2

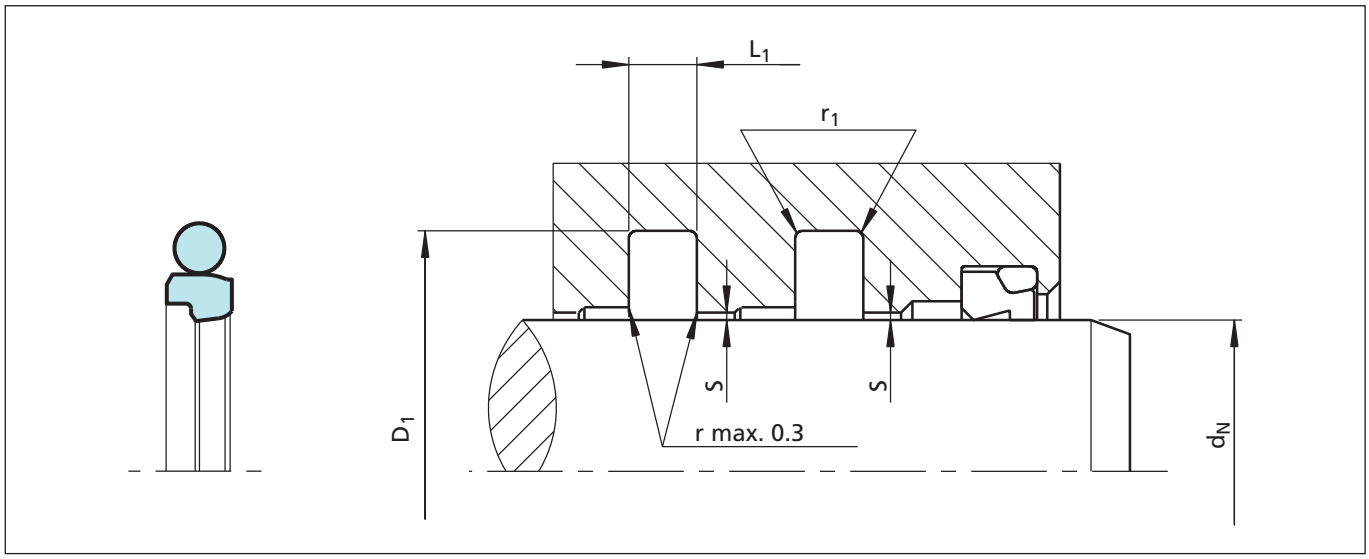

Figure 19 Installation drawing

Dimensions to ISO 7425/2.

Turcon® Stepseal® 2K seals to fit grooves to ISO 7425/2 are additionally marked with a chamfer on the corner of the outside diameter.

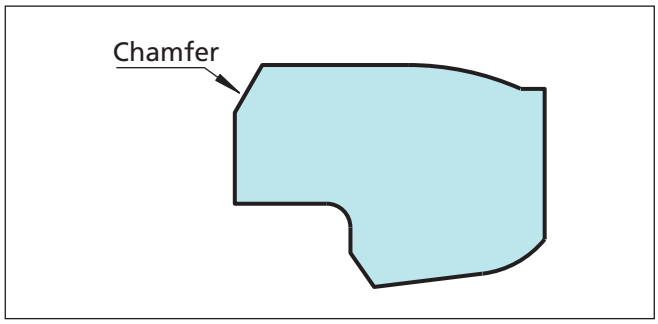

Figure 20 Marking of the ISO version

The dimensions for clearance S, depending on seal dimensions (groove width) and pressure, can be taken from Table XII.

For dimensions d_N, D_1 and L_1 please refer to Table XV.

Technical data, recommendations and material selection as per the standard version.

Table XIV ISO standard series

Series No.	Available for Rod Sizes	Rod Dia. ISO Std.	Radial Depth ISO Std.	Axial Width ISO Std.	Groove Dia. Tol. ISO Std.	Groove Radius ISO Std.
		f8		+0.25/-0		
RSKA	6 - 130	6 - 14	2.50	2.2	ø6 - ø100 (H9) ø110 - ø360 (H8)	ø6 - ø63 (r1=0.5) ø63 - ø360 (r1=0.9)
RSKB	10 - 245	12 - 25	3.75	3.2	ø6 - ø100 (H9) ø110 - ø360 (H8)	ø6 - ø63 (r1=0.5) ø63 - ø360 (r1=0.9)
RSKC	19 - 455	20 - 63	5.50	4.2	ø6 - ø100 (H9) ø110 - ø360 (H8)	ø6 - ø63 (r1=0.5) ø63 - ø360 (r1=0.9)
RSKD	38 - 655	56 - 180	7.75	6.3	ø6 - ø100 (H9) ø110 - ø360 (H8)	ø6 - ø63 (r1=0.5) ø63 - ø360 (r1=0.9)
RSKE	120 - 655	160 - 250	10.50	8.1	ø6 - ø100 (H9) ø110 - ø360 (H8)	ø6 - ø63 (r1=0.5) ø63 - ø360 (r1=0.9)
RSKF	200 - 655	280 - 360	12.25	8.1	ø6 - ø100 (H9) ø110 - ø360 (H8)	ø6 - ø63 (r1=0.5) ø63 - ø360 (r1=0.9)

Ordering example

Turcon® Stepseal® 2K to ISO 7425/2

Rod diameter: d_N = 63.0 mm
Groove width: L_1 = 4.2 mm
TSS Part No. RSKC00630

Select the material from Table XI. The corresponding code numbers are appended to the TSS Part No. (from Table XV). Together these form the TSS Article Number.

TSS Article No.	RSKC	0	0630	-	M12	N
TSS Series No.						
Type (Standard)						
Rod diameter x 10						
Quality Index (Standard)						
Material code (Seal ring)						
Material code (O-Ring)						

Table XV Installation dimensions to ISO 7425/2 / TSS Part No.

Rod d_N f8/h9	Groove Diameter D_1 H9	Groove Width L_1 +0.25	r_1	TSS Part No.	O-Ring Size
6.0	11.0	2.2	0.5	RSKA00060	7.65 x 1.78
8.0	13.0	2.2	0.5	RSKA00080	9.5 x 1.8
10.0	15.0	2.2	0.5	RSKA00100	11.8 x 1.8
12.0	17.0	2.2	0.5	RSKA00120	14.0 x 1.78
12.0	19.5	3.2	0.5	RSKB00120	13.94 x 2.62
14.0	19.0	2.2	0.5	RSKA00140	15.60 x 1.78
14.0	21.5	3.2	0.5	RSKB00140	17.12 x 2.62
16.0	23.5	3.2	0.5	RSKB00160	18.72 x 2.62
18.0	25.5	3.2	0.5	RSKB00180	20.29 x 2.62
20.0	27.5	3.2	0.5	RSKB00200	23.47 x 2.62
20.0	31.0	4.2	0.5	RSKC00200	25.00 x 3.53
22.0	29.5	3.2	0.5	RSKB00220	25.07 x 2.62
22.0	33.0	4.2	0.5	RSKC00220	26.58 x 3.53
25.0	32.5	3.2	0.5	RSKB00250	28.24 x 2.62
25.0	36.0	4.2	0.5	RSKC00250	29.75 x 3.53
28.0	39.0	4.2	0.5	RSKC00280	32.92 x 3.53
32.0	43.0	4.2	0.5	RSKC00320	36.09 x 3.53
36.0	47.0	4.2	0.5	RSKC00360	40.87 x 3.53
40.0	51.0	4.2	0.5	RSKC00400	44.04 x 3.53
45.0	56.0	4.2	0.5	RSKC00450	50.39 x 3.53
50.0	61.0	4.2	0.5	RSKC00500	53.57 x 3.53
56.0	67.0	4.2	0.5	RSKC00560	59.92 x 3.53
56.0	71.5	6.3	0.9	RSKD00560	62.87 x 5.33
63.0	74.0	4.2	0.5	RSKC00630	66.27 x 3.53
63.0	78.5	6.3	0.9	RSKD00630	69.22 x 5.33
70.0	85.5	6.3	0.9	RSKD00700	75.57 x 5.33
80.0	95.5	6.3	0.9	RSKD00800	85.09 x 5.33
90.0	105.5	6.3	0.9	RSKD00900	94.62 x 5.33
100.0	115.5	6.3	0.9	RSKD01000	107.32 x 5.33
110.0	125.5	6.3	0.9	RSKD01100	116.84 x 5.33
125.0	140.5	6.3	0.9	RSKD01250	132.72 x 5.33
140.0	155.5	6.3	0.9	RSKD01400	145.42 x 5.33
160.0	175.5	6.3	0.9	RSKD01600	164.47 x 5.33
160.0	181.0	8.1	0.9	RSKE01600	170.82 x 7.0
180.0	195.5	6.3	0.9	RSKD01800	189.87 x 5.33
180.0	201.0	8.1	0.9	RSKE01800	189.87 x 7.0
200.0	221.0	8.1	0.9	RSKE02000	208.92 x 7.0
220.0	241.0	8.1	0.9	RSKE02200	227.97 x 7.0
250.0	271.0	8.1	0.9	RSKE02500	266.07 x 7.0
280.0	304.5	8.1	0.9	RSKF02800	291.47 x 7.0
320.0	344.5	8.1	0.9	RSKF03200	329.57 x 7.0
360.0	384.5	8.1	0.9	RSKF03600	367.67 x 7.0

Above table only includes ISO rod diameters.

Other dimensions and all intermediate sizes up to 2600 mm diameter including imperial (inch) sizes can be supplied.

Turcon® Stepseal® V

Single Acting

Rubber Energized Plastic Faced Seal

Material:
Turcon® and Zurcon®

■ Turcon® Stepseal® V

Characteristics

- Primary seal with hydrostatic ventilation
- Check valve function
- Hydrodynamic back-pumping
- Stabilised position in the groove
- Fits existing Turcon® Stepseal® groove
- Available for ISO 7425/2 groove
- Prolonged seal life
- Increased leakage control

Improved Friction Performance

Turcon® Stepseal® V offers a uniform, low friction characteristic of the sealing system, throughout its whole life, by preventing undefined pressurisation of the secondary seal element.

Features

Stepseal® V has been developed to meet the continuously increasing demands to the sealing systems. In dynamic applications Stepseal® V brings efficient, reliable sealing performance under even the most demanding service conditions. The high seal efficiency and refined valve function of Stepseal® V eliminates seal system pressure build-up between tandem rod seal configuration and makes buffer volume between the seals a thing of the past.

Stepseal® V is a new generation primary seal designed for use in seal systems. In rod seal systems, Stepseal® V is preferably used together with a secondary seal from the range of Turcon® and Zurcon® rod seals, or with only a double-acting Excluder® or Scraper.

Applied as a piston seal, Stepseal® V is used with a doubleacting seal from the Turcon® range of piston seals. Under extreme performance requirements Stepseal® V offers improved leakage control, extended service life and increased reliability.

Elastomer O-Ring
High flexibility to satisfy hardware tolerances and movement.
Elastomer materials available to meet a wide variety of service conditions.
Pressure Relief Valve Function.

Notch
Ensures rapid pressure actuation and pressure balancing under all service conditions.

Stabilizing Edge
Prevents seal deformation under the most demanding service conditions. Increases assembly robustness through protection of the seal face during insertion of the rod. Scraping edge preventing contamination to be embedded into the sealing lip.

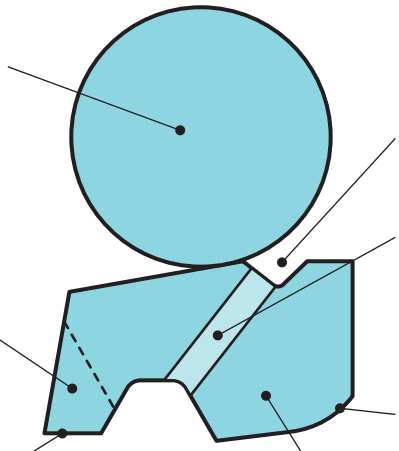

Machined Valve Groove
Ensures precise opening and closing of the relief channel. Provides robust performance of the relief function independently of hardware deflection.

Patented Hydrostatic Pressure Relief Channel
Prevents pressure trap between seals under all service conditions. Prolongs life of sealing system.

Contoured Rear Chamfer for
Hydrodynamic Back-pumping
Improved back-pumping of residual oil film for increased sealing efficiency.
Increased radial clearance.

Turcon® and Zurcon® Material
Low friction, no stick-slip. High sealing efficiency and long service life.
Meets demanding service conditions.
High flexibility for easy installation.

Description

Stepseal® V is based on the dynamic, unidirectional Stepseal® sealing concept. During the extending stroke of the rod, focusing of contact force on the unique Stepseal® sealing edge creates high local sealing pressure and limits the micro fluid film formation under the seal. When the rod is retracted, the design of the full Stepseal® sealing face supports hydrodynamic back-pumping of the fluid film, and so ensures leak-free sealing efficiency with low friction and long service life.

In long-stroke cylinders, and equipment operating with low speed during retraction, it has been found that hydrodynamic back-pumping may become insufficient to prevent build-up of pressure in the seal system behind the primary seal. Pressure build-up in the seal system leads to leakage, increased friction and wear, and may ultimately require replacement of the seals. The usual precaution in such equipment has been to provide space for a buffer volume behind the primary seal, or to install a drain line.

First invented and patented by Trelleborg Sealing Solutions, the built-in check valve function promised to eliminate pressure build-up and so render buffer volumes and drain lines obsolete. Extensive development has now brought the inherent prevention of pressure build-up together with dependable sealing performance in one element; Turcon® Stepseal® V.

Stepseal® V has the efficient seal performance and outstanding service life of the Stepseal® range, and the reliable prevention of pressure build-up brought by a refined check valve function.

Stepseal® V is available in high-grade Turcon® or Zurcon® materials with outstanding sliding and wear resistance properties. It is installed in Trelleborg Sealing Solutions standard grooves and according to ISO 7425, using an O-Ring as energising element.

* Patented and patent pending geometry:
DE 9654357; 24. 2. 996

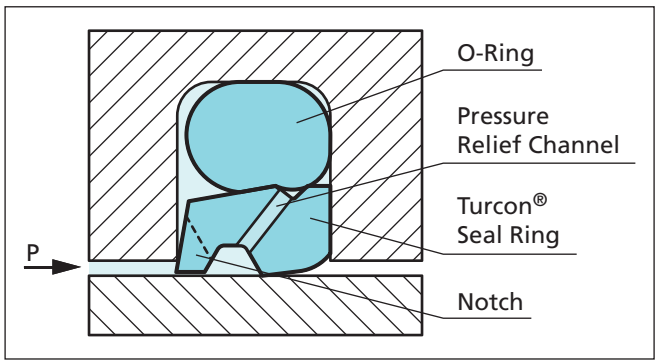

Figure 21 Turcon® Stepseal® V with tight axial groove fit

Method of operation

The sealing performance of the patented Stepseal® V design – see Figure 21 – results from a combination of the hydrodynamic properties of the seal and the O-Ring and the hydrostatic pressure relief check valve function.

The classic Stepseal® operation ensures a controlled pressure gradient that minimizes fluid adherence to the piston rod during the extending stroke, and enables residual fluid film on the rod to be returned into the system on the return stroke.

The O-Ring check valve function controls the operation of the pressure relief channel: When the seal is pressurised by the system pressure the O-Ring keeps the channel closed to ensure that the hydraulic fluid is not passing through the channel and further between the groove wall and the Turcon® Seal Ring.

If pressure, higher than the actual system pressure, appears between the Stepseal® V and the secondary seal, the O-Ring is opening the relief groove somewhere at the circumference and the inter-seal pressure is immediately relieved. Due to the circumferential groove with integrated relief hole the relief function is independent from side load and deflection of the seal or O-Ring.

These patented design features further improve the performance of the Stepseal® concept at all service conditions. Besides giving high static and dynamic sealing performance, the Stepseal® V secures that build-up of intermediate pressure, which can be found with tandem seal configurations, is non-existent, regardless of the pressure, speed, deflection and rod movements.

Advantages:

- Same basic function as Turcon® Stepseal® 2K
- Check valve function of O-Ring eliminates risk of fluid bypassing the seal during pressure loading when pressurised
- No system pressure on secondary sealing element and/ or Excluder®
- Independent of any speed relation of counter surface
- Independent of stroke length
- Independent of deflection
- Minimum contribution of friction of secondary sealing element and/or Excluder®
- Minimum wear of secondary sealing element and/or Excluder®
- Increased leakage control
- Prolonged seal life
- Increased operational reliability
- Fits standard Turcon® Stepseal® 2K groove dimensions as well as ISO 7425 seal housings

Technical data

Operating conditions:

Pressure:	Up to 50 MPa (Turcon® M12) Up to 60 MPa (Turcon® T08 and Zurcon® Z51)
Speed:	Up to 15 m/s with linear movements, frequency up to 15 Hz
Temperature:	-45 °C to +200 °C (depending on seal and O-Ring material)
Media:	Mineral oil based hydraulic fluids, flame retardant hydraulic fluids, environmentally safe hydraulic fluids (plant based oils), phosphate ester, water and others, depending on the seal and O-Ring material - see Table XVII.
Clearance:	The maximum permissible radial clearance Smax is shown in Table XVIII, as a function of the operating pressure and functional diameter.

Important Note:
The above data are maximum values and cannot be used at the same time. e.g. the maximum operating speed depends on material type, pressure, temperature and gap value.

Materials

The following material combinations have proven effective for hydraulic applications:

All round material for hydraulic applications with reciprocating, short stroke or helical movements in mineral oils, flame retardant hydraulic fluids HFC, phospate ester, bio-oils or fluids having less satisfactory lubricating properties:

Turcon® Stepseal® V:	Turcon® M12	
O-Ring:	NBR, 70 Shore A	N
	FKM, 70 Shore A	V
Set code:	M12N or M12V	

For medium to heavy applications with reciprocating movements in mineral oils and other media with good lubrication.

Turcon® Stepseal® V:	Turcon® T46	
O-Ring:	NBR, 70 Shore A	N
	FKM, 70 Shore A	V
Set code:	T46N or T46V	

For specific applications, all Turcon® materials are available. Other viable material combinations are listed in Table XVII.

Installation Instructions

Stepseal® V is preferably installed in closed grooves according to Figure 6 and 7 plus Table VI on page 12.

Series

Different cross-section sizes are recommended as a function of the seal diameters

Table XVI, shows the relationship between the series number according to the seal diameter range and the different application class sizes. These application classes are:

Standard application:	General applications in which no exceptional operating conditions exist.
Light application:	Applications with demands for reduced friction or for smaller grooves.
Heavy-duty application:	For exceptional operating loads such as high pressures, pressure peaks, etc.

Table XVI Available range

Series No.	Rod Diameter d_N f8/h9
RSV20	12.0 - 455.0
RSV30	12.0 - 655.0
RSV40	38.0 - 655.0
RSV80	140.0 - 999.9
RSV50	160.0 - 999.9
RSV5X	1000.0 - 1200.0
RSV60	650.0 - 999.9
RSV6X	1000.0 - 2600.0

For the recommended range see Table XVIII.

Application Examples

- Mobile hydraulic
- Construction equipment
- Crane boom cylinders
- Presses
- Injection molding machines
- Clamp cylinders
- Wind power cylinders
- Long stroke cylinders
- Waterpower cylinders
- Watergate cylinders
- Tensioner Cylinders
- Theater hydraulics

Redundant Sealing System

In many applications, secondary seal systems are demanded. Figure 22 shows such a tandem configuration with the Stepseal® V.

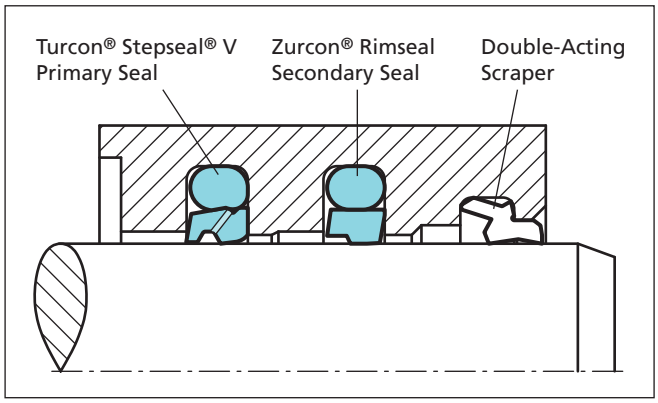

Figure 22 Turcon® Stepseal® V and Zurcon® Rimseal in tandem configuration

When utilizing Stepseal® V, with valve function, there will be no pressure trap between the primary and secondary seals and no extra space between them is required to accumulate hydraulic fluid.

Depending on the application and the operating conditions, the combination of different materials offers a further improvement in the sealing efficiency and the service life of the system, e.g. in hydraulic cylinders subject to high loads and under rough operating conditions, the primary seal should be made of Turcon® and the secondary seal of Zurcon®.

Table XVII Turcon® and Zurcon® Materials for Stepseal® V

Material, Applications, Properties	Code	O–Ring Material Shore A	Code	O-Ring Operating Temp.* °C	Mating Surface Material	MPa max. Dyna-mic
Turcon® M12 First material choice for seals in linear motion Overall improved properties For new constructions and updating For all commonly applied hydraulic fluids including fluids with low lubrication performance Lowest friction and best sliding properties Lowest wear on seals Improved absorption of abrasive contaminants No wear or abrasion of counter surface Mineral fibre and Additvies filled Colour: Dark grey	M12	NBR- 70	N	-30 to +100	Steel Steel hardened Steel chrome plated (rod) Steel plated (rod) Cast iron Stainless steel Titanium	50
		NBR- 70 Low temp.	T	-45 to +80		
		FKM- 70	V	-10 to +200		
Turcon® T05 For lubricating fluids Also for gas service Very low friction Very good sliding and sealing properties Colour: Turquoise	T05	NBR- 70	N	-30 to +100	Steel Steel hardened Steel chrome plated (rod)	20
		NBR- 70 Low temp.	T	-45 to +80		
		FKM- 70	V	-10 to +200		
Turcon® T08 For lubricating fluids and linear motion Very high compressive strength and extrusion resistance Hard counter surfaces is recommended Bronze filled Colour: Light to dark brown, which may have variations in shading	T08	NBR- 70	N	-30 to +100	Steel hardened Steel chrome plated (rod) Cast iron	60
		NBR- 70 Low temp.	T	-45 to +80		
		FKM- 70	V	-10 to +200		
Turcon® T10 For hydraulic and pneumatic For lubricating and non-lubricating fluids High extrusion resistance Good chemical resistance Not for electrically conducting fluids BAM tested Carbon, graphite filled Colour: Black	T10	NBR- 70	N	-30 to +100	Steel Steel hardened Steel chrome plated (rod) Stainless steel	40
		NBR- 70 Low temp.	T	-45 to +80		
		FKM- 70	V	-10 to +200		
		EPDM- 70	E**	-45 to +145		
Turcon® T29 For lubricating and non-lubricating fluids Good extrusion resistance Surface texture is not suitable for gas sealing Not for electrically conducting fluids Carbon fibre filled Colour: Grey	T29	NBR- 70	N	-30 to +100	Steel Steel hardened Steel chrome plated (rod) Cast iron Stainless steel	30
		NBR- 70 Low temp.	T	-45 to +80		
		FKM- 70	V	-10 to +200		
		EPDM- 70	E**	-45 to +145		
Turcon® T40 For lubricating and non-lubricating fluids High frequency and short strokes **Water hydraulics** Surface texture is not suitable for gas sealing Carbon fibre filled Colour: Grey.	T40	NBR- 70	N	-30 to +100	Steel Steel hardened Steel chrome plated (rod) Cast iron Stainless steel Aluminium	25
		NBR- 70 Low temp.	T	-45 to +80		
		FKM- 70	V	-10 to +200		
		EPDM- 70	E**	-45 to +145		

* The O-Ring Operation Temperature is only valid in mineral hydraulic oil (except EPDM). ** Material not suitable for mineral oils.
BAM: Tested by "Bundesanstalt Materialprüfung, Germany". Highlighted materials are standard.

Material, Applications, Properties	Code	O–Ring Material Shore A	Code	O-Ring Operating Temp.* °C	Mating Surface Material	MPa max. Dyna-mic
Turcon® T46 For lubricated hydraulics in linear motion High compressive strength High extrusion resistance Very good sliding and wear properties BAM tested Bronze filled Colour: Light to dark brown, which may have variations in shading.	T46	NBR- 70	N	-30 to +100	Steel hardened Steel chrome plated (rod) Cast iron	50
		NBR- 70 Low temp.	T	-45 to +80		
		FKM- 70	V	-10 to +200		
Zurcon® Z51*** For mineral oil based fluids **Very high abrasion and extrusion resistance** For counter surface with rougher surface finish Limited chemical resistance Max. working temperature 110 °C Cast polyurethane Colour: Yellow to light-brown.	Z51	NBR- 70	N	-30 to +100	Steel Steel hardened Steel chrome plated (rod) Cast iron Stainless steel Ceramic coating	60
		NBR- 70 Low temp.	T	-45 to +80		
Zurcon® Z80 For lubricating and non-lubricating fluids Water based fluids, air and gases Dry air pneumatics High abrasion and extrusion resistance For service in abrasive conditions and media with particles Good chemical resistance Limited temperature capability (-60 to +80 °C) UHMWPE (Ultra High Molecular Weight Polyethylene) Colour: White to off-white.	Z80	NBR- 70	N	-30 to +100	Steel Steel hardened Steel chrome plated (rod) Stainless steel Aluminium Ceramic coating	35
		NBR- 70 Low temp.	T	-45 to +80		
		EPDM- 70	E**	-45 to(+145)		

* The O-Ring Operation Temperature is only valid in mineral hydraulic oil (except EPDM). ** Material not suitable for mineral oils.
BAM: Tested by "Bundesanstalt Materialprüfung, Germany". Highlighted materials are standard.

■ Installation Recommendation

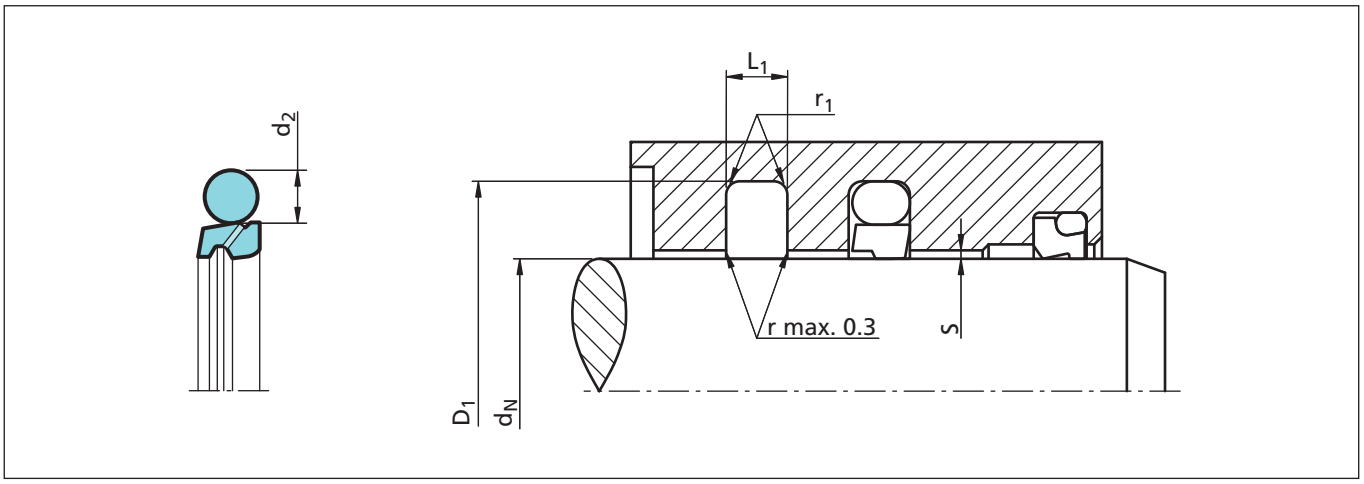

Figure 23 Installation drawing

Table XVIII Installation dimensions – Standard recommendations

Series No.	Rod Diameter d_N f8/h9			Groove Diameter	Groove Width	Radius	Radial Clearance Smax *			O-Ring Cross-Section
	Standard Application	Light Application	Heavy Duty Application	D_1 H9	L_1 +0.2	r_1	10 MPa	20 MPa	40 MPa	d_2
RSV2	12.0 - 37.9	38.0 - 199.9	-	d_N + 10.7	4.2	1.0	0.50	0.30	0.20	3.53
RSV3	38.0 - 199.9	200.0 - 255.9	19.0 - 37.9	d_N + 15.1	6.3	1.3	0.70	0.40	0.25	5.33
RSV4	200.0 - 255.9	256.0 - 649.9	38.0 - 199.9	d_N + 20.5	8.1	1.8	0.80	0.60	0.35	7.00
RSV8	256.0 - 649.9	650.0 - 999.9	200.0 - 255.9	d_N + 24.0	8.1	1.8	0.90	0.70	0.40	7.00
RSV5	650.0 - 999.9	1000 - 1200	256.0 - 649.9	d_N + 27.3	9.5	2.5	1.00	0.80	0.50	8.40
RSV6	≥1000 **	-	650.0 - 999.9	d_N + 38.0	13.8	3.0	1.20	0.90	0.60	12.00

* At pressures > 40 MPa: Use diameter tolerance H8/f8 (bore/ rod) in the area behind the seal; or consult TSS for alternative material or profiles. TSS Slydring®/Wear Rings are not applicable at very small radial clearance; please consult the Slydring® catalog.

** All O-Rings with 12 mm cross section are delivered as special profile ring.

Ordering example

Turcon® Stepseal® V complete with O-Ring, standard application;

Series: RSV4 (from Table XVIII)
Rod diameter: dN = 250.0 mm
TSS Part No.: RSV402500 (from Table XIX)

Select the material from Table XVII.

The corresponding code numbers are appended to the TSS Part No. Together these form the TSS Article Number.

The TSS Article Number for all intermediate sizes not shown in Table XIX can be determined following the example.

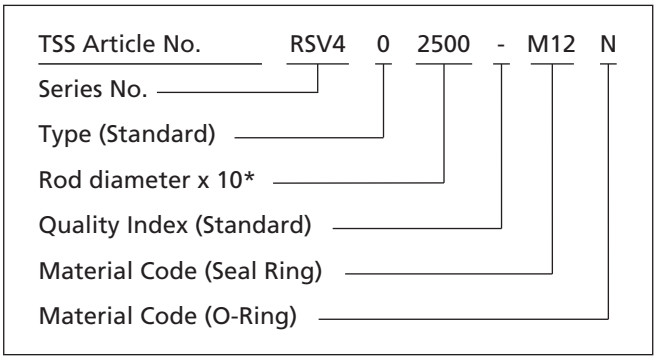

* For diameters ≥1000.0 mm multiply only by factor 1.
Example: RSV6 for diameter 1200.0 mm.
TSS Article No.: RSV6**X1200** - M12

Table XIX Installation dimensions / Part No.

Rod d_N f8/h9	Groove Dia. D_1 H9	Groove Width L_1 +0.2	TSS Part No.	O-Ring Dimension
12.0	**22.7**	**4.2**	**RSV200120**	**17.04 x 3.53**
15.0	25.7	4.2	RSV200150	18.66 x 3.53
19.0	29.7	4.2	RSV200190	23.40 x 3.53
20.0	**30.7**	**4.2**	**RSV200200**	**25.00 x 3.53**
22.0	**32.7**	**4.2**	**RSV200220**	**26.58 x 3.53**
25.0	**35.7**	**4.2**	**RSV200250**	**29.75 x 3.53**
25.4	36.1	4.2	RSV200254	29.75 x 3.53
26.0	36.7	4.2	RSV200260	29.75 x 3.53
28.0	**38.7**	**4.2**	**RSV200280**	**32.92 x 3.53**
30.0	40.7	4.2	RSV200300	34.52 x 3.53
32.0	**42.7**	**4.2**	**RSV200320**	**36.09 x 3.53**
35.0	45.7	4.2	RSV200350	37.69 x 3.53
36.0	**46.7**	4.2	RSV200360	40.87 x 3.53
37.0	47.7	4.2	RSV200370	40.87 x 3.53
38.0	48.7	4.2	RSV200380	40.87 x 3.53
38.0	53.1	6.3	RSV300380	43.82 x 5.33
40.0	**50.7**	**4.2**	**RSV200400**	**44.04 x 3.53**
40.0	**55.1**	**6.3**	**RSV300400**	**43.82 x 5.33**
42.0	52.7	4.2	RSV200420	47.22 x 3.53
42.0	57.1	6.3	RSV300420	46.99 x 5.33
43.0	53.7	4.2	RSV200430	47.22 x 3.53
44.45	59.5	6.3	RSV300444	50.17 x 5.33
45.0	55.7	4.2	RSV200450	50.39 x 3.53
45.0	60.1	6.3	RSV300450	50.17 x 5.33
48.0	58.7	4.2	RSV200480	53.57 x 3.53
48.0	63.1	6.3	RSV300480	53.34 x 5.33
50.0	**60.7**	**4.2**	**RSV200500**	**53.57 x 3.53**
50.0	**65.1**	**6.3**	**RSV300500**	**56.52 x 5.33**
50.8	61.5	4.2	RSV200508	53.57 x 3.53
50.8	65.9	6.3	RSV300508	56.52 x 5.33
52.0	62.7	4.2	RSV200520	56.74 x 3.53
52.0	67.1	6.3	RSV300520	56.52 x 5.33
54.0	69.1	6.3	RSV300540	59.69 x 5.33
55.0	65.7	4.2	RSV200550	59.92 x 3.53
55.0	70.1	6.3	RSV300550	59.69 x 5.33
56.0	**66.7**	**4.2**	**RSV200560**	**59.92 x 3.53**

Rod d_N f8/h9	Groove Dia. D_1 H9	Groove Width L_1 +0.2	TSS Part No.	O-Ring Dimension
56.0	**71.1**	**6.3**	**RSV300560**	**62.87 x 5.33**
57.0	72.1	6.3	RSV300570	62.87 x 5.33
59.0	69.7	4.2	RSV200590	63.09 x 3.53
60.0	70.7	4.2	RSV200600	63.09 x 3.53
60.0	75.1	6.3	RSV300600	66.04 x 5.33
63.0	**73.7**	**4.2**	**RSV200630**	66.**27** x 3.53
63.0	**78.1**	**6.3**	**RSV300630**	**69.22 x 5.33**
63.5	78.6	6.3	RSV300635	69.22 x 5.33
65.0	75.7	4.2	RSV200650	69.44 x 3.53
65.0	80.1	6.3	RSV300650	69.22 x 5.33
67.0	77.7	4.2	RSV200670	72.62 x 3.53
69.0	84.1	6.3	RSV300690	75.57 x 5.33
70.0	80.7	4.2	RSV200700	75.79 x 3.53
70.0	**85.1**	**6.3**	**RSV300700**	**75.57 x 5.33**
70.0	90.5	8.1	RSV400700	64.00 x 7.00
72.0	82.7	4.2	RSV200720	75.79 x 3.53
73.0	88.1	6.3	RSV300730	78.74 x 5.33
75.0	85.7	4.2	RSV200750	78.97 x 3.53
75.0	90.1	6.3	RSV300750	81.92 x 5.33
75.0	95.5	8.1	RSV400750	83.00 x 7.00
76.2	91.3	6.3	RSV300762	81.92 x 5.33
78.0	93.1	6.3	RSV300780	85.09 x 5.33
78.0	98.5	8.1	RSV400780	86.00 x 7.00
80.0	90.7	4.2	RSV200800	85.32 x 3.53
80.0	**95.1**	**6.3**	**RSV300800**	**85.09 x 5.33**
80.0	100.5	8.1	RSV400800	88.00 x 7.00
82.5	97.6	6.3	RSV300825	88.27 x 5.33
83.0	93.7	4.2	RSV200830	88.49 x 3.53
85.0	95.7	4.2	RSV200850	88.49 x 3.53
85.0	100.1	6.3	RSV300850	91.44 x 5.33
85.0	105.5	8.1	RSV400850	93.00 x 7.00
89.0	104.1	6.3	RSV300890	94.62 x 5.33
90.0	100.7	4.2	RSV200900	94.84 x 3.53
90.0	**105.1**	**6.3**	**RSV300900**	**94.62 x 5.33**
90.0	110.5	8.1	RSV400900	98.00 x 7.00
92.0	102.7	4.2	RSV200920	98.02 x 3.53

Rod d_N f8/h9	Groove Dia. D_1 H9	Groove Width L_1 +0.2	TSS Part No.	O-Ring Dimension
92.0	107.1	6.3	RSV300920	97.79 x 5.33
95.0	105.7	4.2	RSV200950	101.19 x 3.53
95.0	110.1	6.3	RSV300950	100.97 x 5.33
95.0	115.5	8.1	RSV400950	103.00 x 7.00
100.0	110.7	4.2	RSV201000	104.37 x 3.53
100.0	**115.1**	**6.3**	**RSV301000**	**107.32 x 5.33**
100.0	120.5	8.1	RSV401000	108.00 x 7.00
101.6	116.7	6.3	RSV301016	107.32 x 5.33
105.0	120.1	6.3	RSV301050	110.49 x 5.33
105.0	125.5	8.1	RSV401050	113.67 x 7.00
110.0	120.7	4.2	RSV201100	113.89 x 3.53
110.0	**125.1**	**6.3**	**RSV301100**	**116.84 x 5.33**
110.0	130.5	8.1	RSV401100	116.84 x 7.00
115.0	130.1	6.3	RSV301150	120.02 x 5.33
120.0	135.1	6.3	RSV301200	126.37 x 5.33
120.0	140.5	8.1	RSV401200	129.54 x 7.00
125.0	**140.1**	**6.3**	**RSV301250**	**129.54 x 5.33**
125.0	145.5	8.1	RSV401250	132.72 x 7.00
125.4	140.5	6.3	RSV301254	132.72 x 5.33
127.0	142.1	6.3	RSV301270	132.72 x 5.33
130.0	145.1	6.3	RSV301300	135.89 x 5.33
130.0	150.5	8.1	RSV401300	139.07 x 7.00
132.0	147.1	6.3	RSV301320	139.07 x 5.33
135.0	145.7	4.2	RSV201350	139.29 x 3.53
135.0	150.1	6.3	RSV301350	142.24 x 5.33
137.0	152.1	6.3	RSV301370	142.24 x 5.33
138.0	153.1	6.3	RSV301380	142.24 x 5.33
140.0	150.7	4.2	RSV201400	145.64 x 3.53
140.0	**155.1**	**6.3**	**RSV301400**	**145.42 x 5.33**
140.0	160.5	8.1	RSV401400	148.59 x 7.00
140.5	155.6	6.3	RSV301405	145.42 x 5.33
145.0	160.1	6.3	RSV301450	151.77 x 5.33
145.0	165.5	8.1	RSV401450	151.77 x 7.00
150.0	165.1	6.3	RSV301500	158.12 x 5.33
150.0	170.5	8.1	RSV401500	158.12 x 7.00
153.0	168.1	6.3	RSV301530	158.12 x 5.33

Rod d_N f8/h9	Groove Dia. D_1 H9	Groove Width L_1 +0.2	TSS Part No.	O-Ring Dimension
155.0	170.1	6.3	RSV301550	158.12 x 5.33
160.0	**175.1**	**6.3**	**RSV301600**	**164.47 x 5.33**
160.0	**180.5**	**8.1**	**RSV401600**	**170.82 x 7.00**
165.0	180.1	6.3	RSV301650	170.82 x 5.33
170.0	185.1	6.3	RSV301700	177.17 x 5.33
170.0	190.5	8.1	RSV401700	177.17 x 7.00
173.0	188.1	6.3	RSV301730	177.17 x 5.33
175.0	190.1	6.3	RSV301750	183.52 x 5.33
180.0	**195.1**	**6.3**	**RSV301800**	**183.52 x 5.33**
180.0	**200.5**	**8.1**	**RSV401800**	**189.87 x 7.00**
185.0	200.1	6.3	RSV301850	189.87 x 5.33
185.0	205.5	8.1	RSV401850	196.22 x 7.00
190.0	205.1	6.3	RSV301900	196.22 x 5.33
190.0	210.5	8.1	RSV401900	196.22 x 7.00
195.0	210.1	6.3	RSV301950	202.57 x 5.33
200.0	215.1	6.3	RSV302000	208.92 x 5.33
200.0	**220.5**	**8.1**	**RSV402000**	**208.90 x 7.00**
205.0	225.5	8.1	RSV402050	215.27 x 7.00
210.0	230.5	8.1	RSV402100	215.27 x 7.00
211.0	231.5	8.1	RSV402110	215.27 x 7.00
212.0	232.5	8.1	RSV402120	227.97 x 7.00
215.0	235.5	8.1	RSV402150	227.97 x 7.00
220.0	240.5	8.1	RSV402200	227.97 x 7.00
225.0	**245.5**	**8.1**	**RSV402250**	**240.67 x 7.00**
230.0	245.1	6.3	RSV302300	234.32 x 5.33
230.0	250.5	8.1	RSV402300	240.67 x 7.00
235.0	255.5	8.1	RSV402350	240.67 x 7.00
240.0	260.5	8.1	RSV402400	253.37 x 7.00
245.0	265.5	8.1	RSV402450	253.37 x 7.00
250.0	**270.5**	**8.1**	**RSV402500**	**266.07 x 7.00**
260.0	284.0	8.1	RSV802600	266.07 x 7.00
265.0	289.0	8.1	RSV802650	278.77 x 7.00
270.0	290.5	8.1	RSV402700	278.77 x 7.00
270.0	294.0	8.1	RSV802700	278.77 x 7.00
275.0	299.0	8.1	RSV802750	291.47 x 7.00
280.0	**304.0**	**8.1**	**RSV802800**	**291.47 x 7.00**

Rod d_N f8/h9	Groove Dia. D_1 H9	Groove Width L_1 +0.2	TSS Part No.	O-Ring Dimension
285.0	309.0	8.1	RSV802850	291.47 x 7.00
290.0	314.0	8.1	RSV802900	304.17 x 7.00
295.0	319.0	8.1	RSV802950	304.17 x 7.00
300.0	320.5	8.1	RSV403000	304.17 x 7.00
300.0	324.0	8.1	RSV803000	316.87 x 7.00
310.0	334.0	8.1	RSV803100	316.87 x 7.00
320.0	**344.0**	**8.1**	**RSV803200**	**329.57 x 7.00**
330.0	354.0	8.1	RSV803300	342.27 x 7.00
340.0	364.0	8.1	RSV803400	354.97 x 7.00
350.0	370.5	8.1	RSV403500	354.97 x 7.00
350.0	374.0	8.1	RSV803500	367.67 x 7.00
360.0	**384.0**	**8.1**	**RSV803600**	**367.67 x 7.00**
365.0	389.0	8.1	RSV803650	380.37 x 7.00
370.0	394.0	8.1	RSV803700	380.37 x 7.00
375.0	399.0	8.1	RSV803750	393.07 x 7.00
380.0	404.0	8.1	RSV803800	393.07 x 7.00
390.0	414.0	8.1	RSV803900	405.26 x 7.00
400.0	424.0	8.1	RSV804000	417.96 x 7.00
410.0	434.0	8.1	RSV804100	417.96 x 7.00
420.0	444.0	8.1	RSV804200	430.66 x 7.00
430.0	454.0	8.1	RSV804300	443.36 x 7.00
435.0	459.0	8.1	RSV804350	443.36 x 7.00
440.0	464.0	8.1	RSV804400	456.06 x 7.00
450.0	474.0	8.1	RSV804500	468.76 x 7.00
460.0	484.0	8.1	RSV804600	468.76 x 7.00
470.0	494.0	8.1	RSV804700	481.38 x 7.00
480.0	504.0	8.1	RSV804800	494.16 x 7.00
485.0	509.0	8.1	RSV804850	494.16 x 7.00
490.0	514.0	8.1	RSV804900	506.86 x 7.00
500.0	524.0	8.1	RSV805000	506.86 x 7.00
510.0	534.0	8.1	RSV805100	532.26 x 7.00
520.0	544.0	8.1	RSV805200	532.26 x 7.00
525.0	549.0	8.1	RSV805250	532.26 x 7.00
530.0	554.0	8.1	RSV805300	557.66 x 7.00
540.0	564.0	8.1	RSV805400	557.66 x 7.00
550.0	574.0	8.1	RSV805500	557.66 x 7.00

Rod d_N f8/h9	Groove Dia. D_1 H9	Groove Width L_1 +0.2	TSS Part No.	O-Ring Dimension
560.0	584.0	8.1	RSV805600	582.68 x 7.00
570.0	594.0	8.1	RSV805700	582.68 x 7.00
580.0	604.0	8.1	RSV805800	608.08 x 7.00
585.0	609.0	8.1	RSV805850	608.08 x 7.00
590.0	614.0	8.1	RSV805900	608.08 x 7.00
600.0	624.0	8.1	RSV806000	608.08 x 7.00
610.0	634.0	8.1	RSV806100	633.48 x 7.00
620.0	644.0	8.1	RSV806200	633.48 x 7.00
630.0	654.0	8.1	RSV806300	658.88 x 7.00
640.0	664.0	8.1	RSV806400	658.88 x 7.00
650.0	677.3	9.5	RSV506500	663 x 8.40
656.0	683.3	9.5	RSV506560	669 x 8.40
660.0	687.3	9.5	RSV506600	673 x 8.40
680.0	707.3	9.5	RSV506800	693 x 8.40
685.0	712.3	9.5	RSV506850	698 x 8.40
700.0	724.0	8.1	RSV807000	712 x 7.00
700.0	727.3	9.5	RSV507000	713 x 8.40
710.0	737.3	9.5	RSV507100	723 x 8.40
730.0	757.3	9.5	RSV507300	743 x 8.40
760.0	787.3	9.5	RSV507600	773 x 8.40
765.0	792.3	9.5	RSV507650	778 x 8.40
780.0	807.3	9.5	RSV507800	793 x 8.40
790.0	817.3	9.5	RSV507900	803 x 8.40
800.0	827.3	9.5	RSV508000	813 x 8.40
810.0	837.3	9.5	RSV508100	823 x 8.40
820.0	847.3	9.5	RSV508200	833 x 8.40
830.0	857.3	9.5	RSV508300	843 x 8.40
850.0	877.3	9.5	RSV508500	863 x 8.40
870.0	897.3	9.5	RSV508700	883 x 8.40
880.0	907.3	9.5	RSV508800	893 x 8.40
885.0	912.3	9.5	RSV508850	898 x 8.40
890.0	917.3	9.5	RSV508900	903 x 8.40
930.0	957.3	9.5	RSV509300	943 x 8.40
955.0	982.3	9.5	RSV509550	968 x 8.40
1000.0	1038.0	13.8	RSV6X1000	1016 x 12.00
1035.0	1073.0	13.8	RSV6X1035	1051 x 12.00

Rod	Groove Dia.	Groove Width	TSS Part No.	O-Ring Dimension
d_N f8/h9	D_1 H9	L_1 +0.2		
1040.0	1067.3	9.5	RSV5X1040	1053 x 8.40
1040.0	1078.0	13.8	RSV6X1040	1056 x 12.00
1050.0	1077.3	9.5	RSV5X1050	1063 x 8.40
1050.0	1088.0	13.8	RSV6X1050	1066 x 12.00
1100.0	1138.0	13.8	RSV6X1100	1116 x 12.00
1120.0	1147.3	9.5	RSV5X1120	1133 x 8.40
1120.0	1158.0	13.8	RSV6X1120	1136 x 12.00
1200.0	1227.3	9.5	RSV5X1200	1213 x 8.40
1200.0	1238.0	13.8	RSV6X1200	1216 x 12.00
1330.0	1368.0	13.8	RSV6X1330	1346 x 12.00
1500.0	1538.0	13.8	RSV6X1500	1516 x 12.00
1600.0	1638.0	13.8	RSV6X1600	1616 x 12.00
2000.0	2038.0	13.8	RSV6X2000	2016 x 12.00
2600.0	2638.0	13.8	RSV6X2600	2616 x 12.00

The rod diameters in **bold** type are in accordance with the recommendations of ISO 3320.
Other dimensions and all intermediate sizes up to 2600 mm diameter including imperial (inch) sizes can be supplied.
All O-Rings with 12 mm cross section are delivered as special profile ring.

Zurcon® Rimseal

Single Acting

Rubber Energized Plastic Faced Seal

Material:
Zurcon®

■ Zurcon® Rimseal*

Description

When the field of application and system requirements make high demands on leakage control and operational reliability, a redundant sealing system is necessary to ensure reliable sealing of hydraulic cylinders at the piston rod. Sealing systems with elastomer-energized polymer seals are a proven answer to widely varying demands for standardised grooves, simple installation, resistance to media, high and low temperatures and pressures. The system offers enormous flexibility in the choice and matching of materials.

The piston rod sealing system for hydraulic cylinders subject to heavy loads should consist of three elements:

The Turcon® Stepseal® 2K used as primary seal. This seal element offers the back pumping property necessary for redundant rod seal systems as well as good resistance to high and low temperatures and high media resistance.

The Zurcon® Rimseal was developed as the secondary seal in this system to ensure reliable sealing of thin oil films at low secondary pressures. A Zurcon® material (polyurethane Shore D 58) is used combined with a new seal profile.

The contact pressure curve is automatically optimised under dynamic conditions.

The final outer element of the redundant sealing system is a double-acting scraper seal (e.g. DA24, DA 22, DA 17, DA 27. Turcon® Excluder® 2 resp. 5 or Zurcon® Excluder® 500).

The optimum sealing system thus consists of three independent lip seals installed in line, whereby the hardness of the material decreases from the pressure side to the atmospheric side.

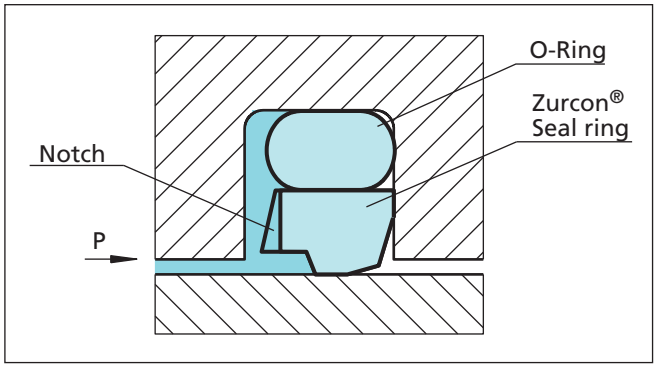

Figure 24 Zurcon® Rimseal

* Patent No.: EP 0 670 444

Method of Operation

The Zurcon® Rimseal is an elastomer energised seal element. The changes in seal position in the groove necessary for an optimum sealing function are guaranteed by the combination of the two component parts (O-Ring and seal ring).

In order to achieve a contact pressure curve which enhances the sealing effect, the seal has a chamfer on the low pressure side. When under pressure and exposed to friction against the piston rod, this chamfer causes the seal to tilt slightly so that the seal ring is forced against the side of the groove. This creates an area of maximum pressure at the edge of the seal.

When the Zurcon® Rimseal is used in a system with a double-acting scraper DA 24 (DA 22, DA 17, DA 27, Excluder® 2 resp. 5 or 500), the sealing function of the system must be assured even if pressure build-up occurs between the Zurcon® Rimseal and the double-acting scraper seal.

For this reason, the high-pressure side of the seal ring also has a chamfer which, in the event of a build-up of pressure behind the Zurcon® Rimseal, comes into contact with the flank of the groove. The Zurcon® Rimseal moves in the groove so that a contact pressure distribution is obtained on the piston rod which enhances the back pumping effect.

Advantages

- High static and dynamic leak tightness
- Low friction for reduced power loss
- High wear resistance for long service life
- Small groove
- Easy installation
- Optimum system element
- ISO/DIN grooves optional
- Available for any diameter from 8 to 2200 mm

Application Examples

- Mobile hydraulics
- Standard cylinders
- Machine tools
- Injection moulding machines
- Presses

Technical Data

Operating conditions

Pressure:	In tandem system: Up to 60 MPa As an individual element: 25MPa
Velocity:	5 m/s with short strokes (<1 m) in tandem system
Temperature:	-45 °C to +110 °C depending on O-Ring material
Media:	Hydraulic fluids -Mineral oil -Synthetic and natural esters -HEES. HETG up to +60 °C -Flame retardant fluids HFA. HFC

Important Note:
The above data are maximum values and cannot be used at the same time. e.g. the maximum operating speed depends on material type, pressure, temperature and gap value.
Temperature range also dependent on medium.

Materials

The Zurcon® Rimseal is made in the following material combinations as standard:

Zurcon® Rimseal:	Zurcon® Z52 Special polyurethane 58 Shore D
O-Ring:	NBR. 70 Shore A
Set code:	Z52N or Z52T

Series

The Zurcon® Rimseal is a system seal and is preferably used in tandem sealing systems in conjunction with the Turcon® Stepseal® 2K. For this reason the type series are identical with those for the Turcon® Stepseal® 2K.

Table XX shows the relationship between the series number according to the seal diameter range and the different application class sizes. These application classes are:

Standard application	RR13
Light application	RR15
Heavy-duty application	RR11

Redundant Sealing System

Redundant sealing systems are used where the application conditions no longer permit reliable sealing over the demanded service life with a single seal.

The property of the tandem sealing system is particularly important during cold starts when, due to the very high viscosity of the oil, the primary seal allows oil to pass as the piston rod is extended. In the tandem system the oil is heated as a result of the friction at the primary seal and is then reliably wiped off - at a now lower viscosity - by the secondary seal, the Zurcon® Rimseal.

As the piston rod is retracted, the oil is stored in the reservoir between the seals, and is then pumped back against the system pressure by the hydrodynamics in the seal clearance of the Turcon® Stepseal® 2K.

Particularly with strokes of more than 1 metre, constructional measures have to be taken to provide a storage chamber between the seals.

The Zurcon® Rimseal is designed so that it also has the back pumping properties necessary when using a double-acting scraper in the rod sealing system.

Due to the controlled sealing behaviour of the individual elements in the sealing system and the appropriate combination of the seal materials, a rod seal system is obtained with a low overall friction.

The Figure 25 shows a redundant rod seal system consisting of Turcon® Stepseal® 2K, Zurcon® Rimseal and Rod Scraper DA 22 with corresponding wear ring arrangement.

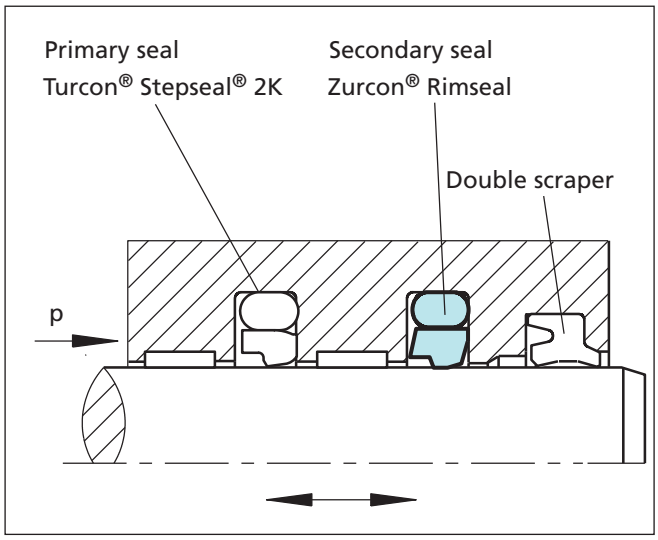

Figure 25 Zurcon® Rimseal in tandem configuration

■ Installation Recommendation

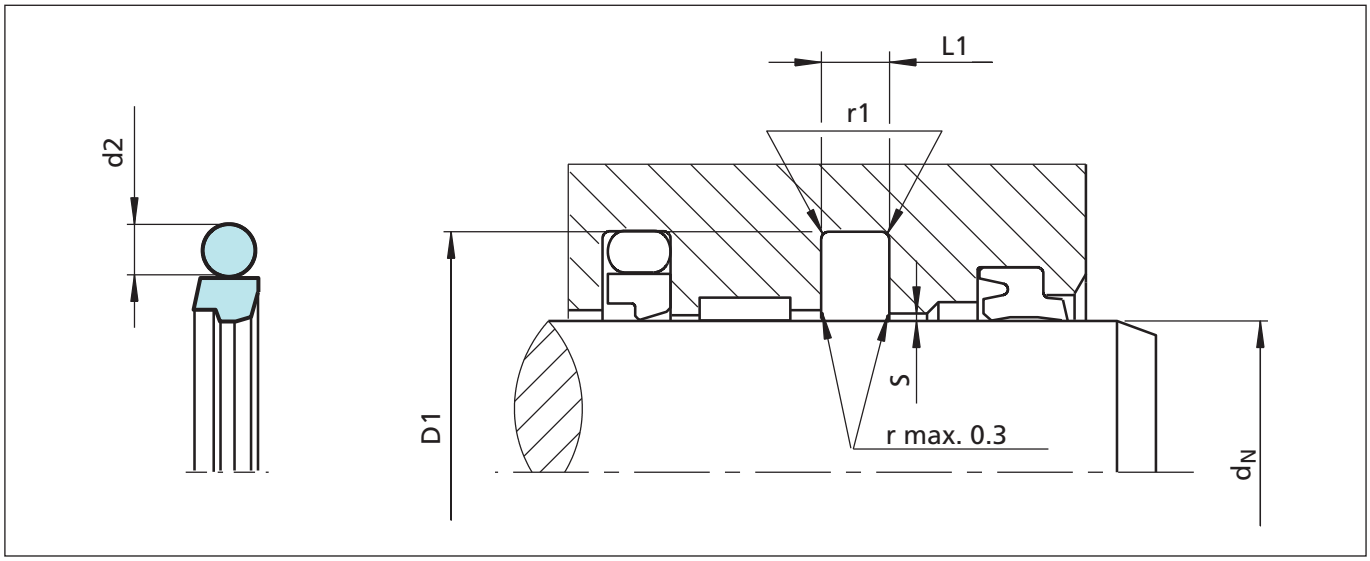

Figure 26 Installation drawing

Table XX Installation dimensions - Standard Recommendation

Rod Diameter d_N f8/h9			Groove Diameter	Groove Width	Radius	Radial Clearance S max.		O-Ring Cross-Section
Series No. RR 13 Standard Application	**Series No. RR 15 Light Application**	**Series No. RR 11 Heavy Duty Application**	D_1 H9	L_1 +0.2	r_1	**10 MPa**	**20 MPa**	d_2
8 - 18.9	19 - 37.9	-	d_N + 7.3	3.2	0.6	0.40	0.25	2.62
19 - 37.9	38 - 199.9	8 - 18.9	d_N + 10.7	4.2	1.0	0.40	0.25	3.53
38 - 199.9	200 - 255.9	19 - 37.9	d_N + 15.1	6.3	1.3	0.50	0.30	5.33
200 - 255.9	256 - 649.9	38 - 199.9	d_N + 20.5	8.1	1.8	0.60	0.35	7.00
256 - 649.9	650 - 999.9	200 - 255.9	d_N + 24.0	8.1	1.8	0.60	0.35	7.00
650 - 999.9	1000 - 2200	256 - 649.9	d_N + 27.3	9.5	2.5	0.70	0.50	8.40
1000 - 2200	-	650 - 999.9	d_N + 38.0	13.8	3.0	1.00	0.70	12.00

Installation in closed grooves from diameters > 18 mm
Also for installation according to ISO 7425/ 2

Ordering example

Zurcon® Rimseal complete with NBR O-Ring
Series RR 13 (from Table XX).

Rod diameter: d_N = 80.0 mm
TSS Part No.: RR1300800
(from Table XXI).

The TSS Article Number for all sizes not shown in Table XXI can be determined following the example opposite.
** For diameters ≥ 1000.0 mm multiply only by factor 1.
Example: RR13 for diameter 1200.0 mm.
TSS Article No.: RR13**X1200** - Z52N.

TSS Article No. RR13 0 0800 - Z52 N*

- TSS Series No. — RR13
- Type (Standard) — 0
- Rod diameter x 10** — 0800
- Quality Index (Standard) — -
- Material code (Seal ring) — Z52
- Material code (O-Ring) — N*

* Zurcon® Rimseal is always supplied as a set with a Nitrile O-Ring, code N or T. See page 25 O-Ring code.

Table XXI Installation dimensions / TSS Article No.

Rod	Groove Dia.	Groove Width	TSS Article No.*	O-Ring Size
d_N f8/h9	D_1 H9	L_1 +0.2		
8.0	**15.3**	**3.2**	**RR1300080-Z52N**	**10.77 x 2.62**
10.0	**17.3**	**3.2**	**RR1300100-Z52N**	**12.37 x 2.62**
12.0	**19.3**	**3.2**	**RR1300120-Z52N**	**13.94 x 2.62**
14.0	**21.3**	**3.2**	**RR1300140-Z52N**	**17.12 x 2.62**
16.0	**23.3**	**3.2**	**RR1300160-Z52N**	**18.72 x 2.62**
18.0	**25.3**	**3.2**	**RR1300180-Z52N**	**20.29 x 2.62**
20.0	27.3	3.2	RR1500200-Z52N	21.89 x 2.62
20.0	**30.7**	**4.2**	**RR1300200-Z52N**	**23.40 x 3.53**
22.0	29.3	3.2	RR1500220-Z52N	25.07 x 2.62
22.0	**32.7**	**4.2**	**RR1300220-Z52N**	**26.58 x 3.53**
25.0	32.3	3.2	RR1500250-Z52N	26.64 x 2.62
25.0	**35.7**	**4.2**	**RR1300250-Z52N**	**29.75 x 3.53**
28.0	35.3	3.2	RR1500280-Z52N	29.82 x 2.62
28.0	**38.7**	**4.2**	**RR1300280-Z52N**	**32.92 x 3.53**
30.0	37.3	3.2	RR1500300-Z52N	32.99 x 2.62
30.0	40.7	4.2	RR1300300-Z52N	34.52 x 3.53
32.0	39.3	3.2	RR1500320-Z52N	34.59 x 2.62
32.0	**42.7**	**4.2**	**RR1300320-Z52N**	**36.09 x 3.53**
35.0	42.3	3.2	RR1500350-Z52N	37.77 x 2.62
35.0	45.7	4.2	RR1300350-Z52N	37.70 x 3.53
36.0	43.3	3.2	RR1500360-Z52N	39.34 x 2.62

The rod diameters in **bold** type are in accordance with the recommendations of ISO 3320.
Other dimensions and all intermediate sizes up to 2200 mm diameter including imperial (inch) sizes can be supplied.
* TSS Article Number incl. of NBR-O-Ring.
For application of low-temperature O-Ring, please use Material Set Code Z52T instead of Z52N
All O-Rings with 12 mm cross section are delivered as special profilring.

Rod	Groove Dia.	Groove Width	TSS Article No.*	O-Ring Size
d_N f8/h9	D_1 H9	L_1 +0.2		
36.0	**46.7**	**4.2**	**RR1300360-Z52N**	**40.87 x 3.53**
40.0	50.7	4.2	RR1500400-Z52N	44.04 x 3.53
40.0	**55.1**	**6.3**	**RR1300400-Z52N**	**43.82 x 5.33**
45.0	55.7	4.2	RR1500450-Z52N	50.39 x 3.53
45.0	**60.1**	**6.3**	**RR1300450-Z52N**	**50.17 x 5.33**
50.0	60.7	4.2	RR1500500-Z52N	53.57 x 3.53
50.0	**65.1**	**6.3**	**RR1300500-Z52N**	**56.52 x 5.33**
55.0	65.7	4.2	RR1500550-Z52N	59.92 x 3.53
55.0	70.1	6.3	RR1300550-Z52N	59.69 x 5.33
56.0	**71.1**	**6.3**	**RR1300560-Z52N**	**62.87 x 5.33**
60.0	70.7	4.2	RR1500600-Z52N	63.09 x 3.53
60.0	75.1	6.3	RR1300600-Z52N	66.04 x 5.33
63.0	73.7	4.2	RR1500630-Z52N	66.27 x 3.53
63.0	**78.1**	**6.3**	**RR1300630-Z52N**	**69.22 x 5.33**
65.0	80.1	6.3	RR1300650-Z52N	69.22 x 5.33
70.0	**85.1**	**6.3**	**RR1300700-Z52N**	**75.57 x 5.33**
75.0	90.1	6.3	RR1300750-Z52N	81.92 x 5.33
80.0	90.7	4.2	RR1500800-Z52N	85.32 x 3.53
80.0	**95.1**	**6.3**	**RR1300800-Z52N**	**85.09 x 5.33**
85.0	100.1	6.3	RR1300850-Z52N	91.44 x 5.33
90.0	**105.1**	**6.3**	**RR1300900-Z52N**	**94.62 x 5.33**
95.0	110.1	6.3	RR1300950-Z52N	100.97 x 5.33
100.0	**115.1**	**6.3**	**RR1301000-Z52N**	**107.32 x 5.33**
105.0	120.1	6.3	RR1301050-Z52N	110.49 x 5.33
110.0	**125.1**	**6.3**	**RR1301100-Z52N**	**116.84 x 5.33**
110.0	130.5	8.1	RR1101100-Z52N	116.89 x 7.0
115.0	130.1	6.3	RR1301150-Z52N	120.02 x 5.33
120.0	135.1	6.3	RR1301200-Z52N	126.37 x 5.33
125.0	**140.1**	**6.3**	**RR1301250-Z52N**	**129.54 x 5.33**
125.0	145.5	8.1	RR1101250-Z52N	132.72 x 7.0
130.0	145.1	6.3	RR1301300-Z52N	135.89 x 5.33
135.0	150.1	6.3	RR1301350-Z52N	142.24 x 5.33
140.0	**155.1**	**6.3**	**RR1301400-Z52N**	**145.42 x 5.33**

The rod diameters in **bold** type are in accordance with the recommendations of ISO 3320.
Other dimensions and all intermediate sizes up to 2200 mm diameter including imperial (inch) sizes can be supplied.
* TSS Article Number incl. of NBR-O-Ring.
For application of low-temperature O-Ring, please use Material Set Code Z52T instead of Z52N
All O-Rings with 12 mm cross section are delivered as special profilring.

Rod	Groove Dia.	Groove Width	TSS Article No.*	O-Ring Size
d_N f8/h9	D_1 H9	L_1 +0.2		
145.0	160.1	6.3	RR1301450-Z52N	151.77 x 7.0
150.0	165.1	6.3	RR1301500-Z52N	158.12 x 5.33
150.0	170.5	8.1	RR1101500-Z52N	158.12 x 7.0
155.0	170.1	6.3	RR1301550-Z52N	158.12 x 5.33
160.0	**175.1**	**6.3**	**RR1301600-Z52N**	**164.47 x 5.33**
160.0	180.5	8.1	RR1101600-Z52N	170.82 x 7.0
165.0	180.1	6.3	RR1301650-Z52N	170.82 x 5.33
170.0	185.1	6.3	RR1301700-Z52N	177.17 x 5.33
175.0	190.1	6.3	RR1301750-Z52N	183.52 x 5.33
180.0	**195.1**	**6.3**	**RR1301800-Z52N**	**183.52 x 5.33**
180.0	200.5	8.1	RR1101800-Z52N	189.87 x 7.0
185.0	200.1	6.3	RR1301850-Z52N	189.87 x 5.33
190.0	205.1	6.3	RR1301900-Z52N	196.22 x 5.33
200.0	**220.5**	**8.1**	**RR1302000-Z52N**	**208.92 x 7.0**
210.0	230.5	8.1	RR1302100-Z52N	215.27 x 7.0
220.0	**240.5**	**8.1**	**RR1302200-Z52N**	**227.97 x 7.0**
230.0	250.5	8.1	RR1302300-Z52N	240.67 x 7.0
240.0	260.5	8.1	RR1302400-Z52N	253.37 x 7.0
250.0	**270.5**	**8.1**	**RR1302500-Z52N**	**266.07 x 7.0**
260.0	284.0	8.1	RR1302600-Z52N	266.07 x 7.0
280.0	**304.0**	**8.1**	**RR1302800-Z52N**	**291.47 x 7.0**
300.0	324.0	8.1	RR1303000-Z52N	316.87 x 7.0
310.0	334.0	8.1	RR1303100-Z52N	316.87 x 7.0
320.0	**344.0**	**8.1**	**RR1303200-Z52N**	**329.57 x 7.0**
340.0	364.0	8.1	RR1303400-Z52N	354.97 x 7.0
350.0	374.0	8.1	RR1303500-Z52N	367.67 x 7.0
360.0	**384.0**	**8.1**	**RR1303600-Z52N**	**367.67 x 7.0**
380.0	404.0	8.1	RR1303800-Z52N	393.07 x 7.0
400.0	424.0	8.1	RR1304000-Z52N	417.96 x 7.0
420.0	444.0	8.1	RR1304200-Z52N	430.66 x 7.0
450.0	474.0	8.1	RR1304500-Z52N	468.76 x 7.0
480.0	504.0	8.1	RR1304800-Z52N	494.16 x 7.0
500.0	524.0	8.1	RR1305000-Z52N	506.86 x 7.0

The rod diameters in **bold** type are in accordance with the recommendations of ISO 3320.
Other dimensions and all intermediate sizes up to 2200 mm diameter including imperial (inch) sizes can be supplied.
* TSS Article Number incl. of NBR-O-Ring.
For application of low-temperature O-Ring, please use Material Set Code Z52T instead of Z52N
All O-Rings with 12 mm cross section are delivered as special profilring.

Rod	Groove Dia.	Groove Width	TSS Article No.*	O-Ring Size
d_N f8/h9	D_1 H9	L_1 +0.2		
600.0	624.0	8.1	RR1306000-Z52N	608.08 x 7.0
610.0	634.0	8.1	RR1306100-Z52N	633.48 x 7.0
620.0	644.0	8.1	RR1306200-Z52N	633.48 x 7.0
630.0	654.0	8.1	RR1306300-Z52N	658.88 x 7.0
640.0	664.0	8.1	RR1306400-Z52N	658.88 x 7.0
650.0	677.3	9.5	RR1306500-Z52N	663 x 8.4
656.0	683.3	9.5	RR1306560-Z52N	669 x 8.4
660.0	687.3	9.5	RR1306600-Z52N	673 x 8.4
680.0	707.3	9.5	RR1306800-Z52N	693 x 8.4
685.0	712.3	9.5	RR1306850-Z52N	698 x 8.4
700.0	724.0	8.1	RR1507000-Z52N	712 x 7.0
700.0	727.3	9.5	RR1307000-Z52N	713 x 8.4
710.0	737.3	9.5	RR1307100-Z52N	723 x 8.4
730.0	757.3	9.5	RR1307300-Z52N	743 x 8.4
760.0	787.3	9.5	RR1307600-Z52N	773 x 8.4
765.0	792.3	9.5	RR1307650-Z52N	778 x 8.4
780.0	807.3	9.5	RR1307800-Z52N	793 x 8.4
790.0	817.3	9.5	RR1307900-Z52N	803 x 8.4
800.0	827.3	9.5	RR1308000-Z52N	813 x 8.4
810.0	837.3	9.5	RR1308100-Z52N	823 x 8.4
820.0	847.3	9.5	RR1308200-Z52N	833 x 8.4
830.0	857.3	9.5	RR1308300-Z52N	843 x 8.4
850.0	877.3	9.5	RR1308500-Z52N	863 x 8.4
870.0	897.3	9.5	RR1308700-Z52N	883 x 8.4
880.0	907.3	9.5	RR1308800-Z52N	893 x 8.4
885.0	912.3	9.5	RR1308850-Z52N	898 x 8.4
890.0	917.3	9.5	RR1308900-Z52N	903 x 8.4
930.0	957.3	9.5	RR1309300-Z52N	943 x 8.4
955.0	982.3	9.5	RR1309550-Z52N	968 x 8.4
1000.0	1038.0	13.8	RR13X1000-Z52N	1016 x 12
1035.0	1073.0	13.8	RR13X1035-Z52N	1051 x 12
1040.0	1067.3	9.5	RR15X1040-Z52N	1053 x 8.4
1040.0	1078.0	13.8	RR13X1040-Z52N	1056 x 12

The rod diameters in **bold** type are in accordance with the recommendations of ISO 3320.
Other dimensions and all intermediate sizes up to 2200 mm diameter including imperial (inch) sizes can be supplied.
* TSS Article Number incl. of NBR-O-Ring.
For application of low-temperature O-Ring, please use Material Set Code Z52T instead of Z52N
All O-Rings with 12 mm cross section are delivered as special profilring.

Rod	Groove Dia.	Groove Width	TSS Article No.*	O-Ring Size
d_N f8/h9	D_1 H9	L_1 +0.2		
1050.0	1077.3	9.5	RR15X1050-Z52N	1063 x 8.4
1050.0	1088.0	13.8	RR13X1050-Z52N	1066 x 12
1100.0	1138.0	13.8	RR13X1100-Z52N	1116 x 12
1120.0	1147.3	9.5	RR15X1120-Z52N	1133 x 8.4
1120.0	1158.0	13.8	RR13X1120-Z52N	1136 x 12
1200.0	1227.3	9.5	RR15X1200-Z52N	1213 x 8.4
1200.0	1238.0	13.8	RR13X1200-Z52N	1216 x 12
1330.0	1357.3	9.5	RR15X1330-Z52N	1343 x 8.4
1330.0	1368.0	13.8	RR13X1330-Z52N	1346 x 12
1500.0	1527.3	9.5	RR15X1500-Z52N	1513 x 8.4
1500.0	1538.0	13.8	RR13X1500-Z52N	1516 x 12
1600.0	1638.0	13.8	RR13X1600-Z52N	1616 x 12
2000.0	2038.0	13.8	RR13X2000-Z52N	2016 x 12

The rod diameters in **bold** type are in accordance with the recommendations of ISO 3320.
Other dimensions and all intermediate sizes up to 2200 mm diameter including imperial (inch) sizes can be supplied.
* TSS Article Number incl. of NBR-O-Ring.
For application of low-temperature O-Ring, please use Material Set Code Z52T instead of Z52N
All O-Rings with 12 mm cross section are delivered as special profilring.

POLYPAC® - Veepac CH

Single Acting

Set of Chevron Rings

With Support and Pressure Energizing Ring

Without and with Anti-extrusion Ring

Material:
Fabric Reinforced Rubber - POM or PTFE

■ Veepac CH

Description

Veepac seals are sets of fabric reinforced chevron rings. They are composed by a support ring, "V" shaped sealing rings and a pressure energizing ring.

The support ring or base ring guides and sustains the other "V" shaped rings for best performance. Special versions provide incorporated anti-extrusion rings, either on the inner or outer side, for rod or piston applications (see type CH/NEI or CH/NEO). In standard version the support ring is manufactured in cotton fabric reinforced rubber, for a good anti-extrusion resistance.

The intermediate "V" shaped rings (vee-rings) are the real sealing elements of Veepac seals. Their particular shape confirs the capacity of increasing sealing effectiveness under high pressure. In standard version they are made in cotton fabric reinforced NBR and pure NBR.

The energizer ring ensures uniform loading of pressure on the other rings. This element is manufactured in acetal resin, or cotton fabric reinforced nitrile for diameters over 300 mm (standard material).

Design

The veepac seals are available in different compositions. The standard version consists in a support ring, two fabric reinforced vee-rings, one rubber vee-ring and the energizing ring.

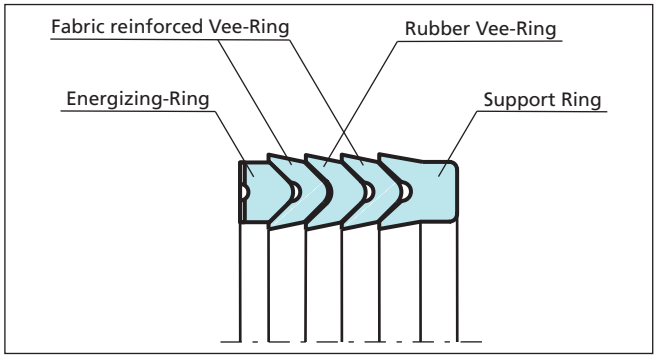

Figure 27 Veepac standard design

When the rubber vee-ring isn't available (indicated in the Table XXIII with the symbol ^) the veepac are assembled with three fabric reinforced vee-ring as shown in figure below.

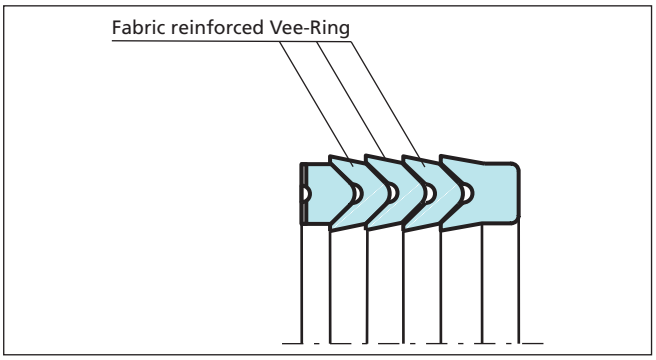

Figure 28 Veepac design with 3 fabric reinforced vee-ring

Where extrusion gaps are greater than those specified or for higher pressure conditions, special designs incorporating anti-extrusion rings can be made, to suit rods (suffix NEI) and at the Polypac ref.

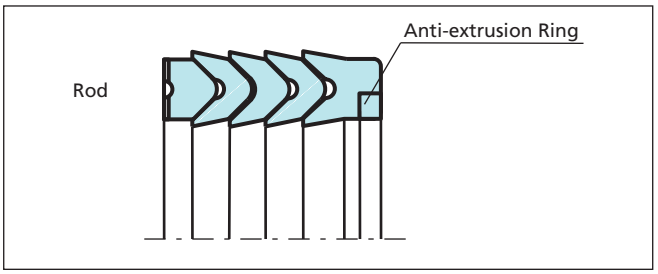

Figure 29 Veepac design with anti-extrusion ring

Advantages

- Exceptional wear resistance
- Pre-load adjustment capability
- Excellent behaviour in harsh conditions
- Rod-seal replacement without complete cylinder dismantling possible
- Long service life

Application Examples

VEEPAC seals are recommended for single acting or double acting (back to back installation) hydraulic cylinders in the following applications:

- Ship hydraulics
- Excavators
- Steel mills
- Presses

Technical Data

Pressure:	Up to 40 MPa
Velocity:	Up to 0.5 m/s
Temperature:	-30 °C to +200 °C
Media:	Hydraulic fluids Mineral Oil based hydraulic fluids,Water/oil and Water/ Glycol emulsions.
Groove type:	Open

Important Note:
The above data are maximum values and cannot be used at the same time. e.g. the maximum operating speed depends on material type, pressure, temperature and gap value.
Temperature range also dependent on medium.

Gap Dimensions

To prevent extrusion the diameter not facing the pressure must be max. 0.3 mm smaller (than the piston seal) and 0.3 mm larger (than the rod seal). Using Veepac with Back-up Ring enables double values.

Materials

Components of the VEEPAC seals are made in different combinations of materials, according to the specific application (see table below).

Table XXII Material Selection

Material Set Code	Temperature	Sealing Ring Material	Energizer Ring Material	
N0O0C	-30 to +130 °C	Cotton reinforced NBR	POM-GL-BK	up to 300 mm I.D.
			Cotton reinforced NBR	over 300 mm I.D.
V0O0A	-20 to +150 °C	Aramidic Fibre reinforced FKM	POM-GL-BK	up to 300 mm I.D.
			Aramidic Fibre reinforced FKM	over 300 mm I.D.
V0P0A	-20 to +200 °C	Aramidic Fibre reinforced FKM	Filled PTFE	up to 300 mm I.D.
			Aramidic Fibre reinforced FKM	over 300 mm I.D.

Highlighted material is standard.

■ Installation Recommendation

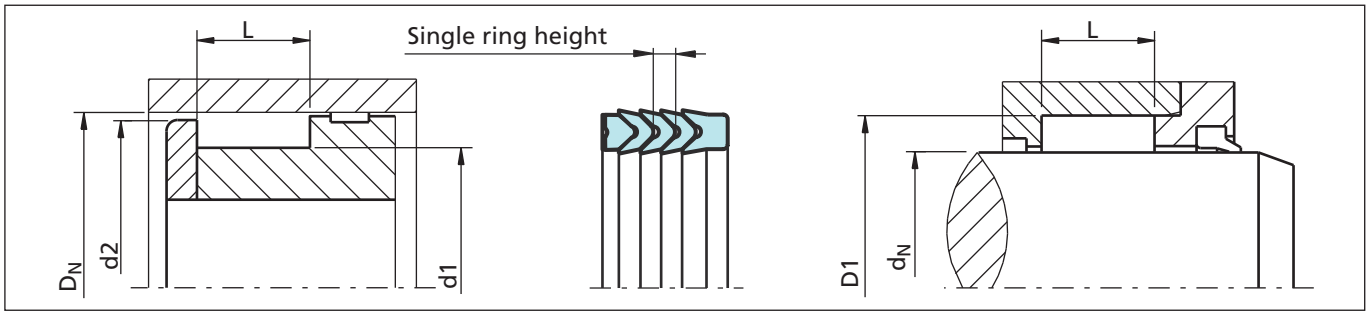

Figure 30 Installation drawing

Ordering Example

For a **rod or piston** application of standard Veepac sealing element composed by: Support ring, 3 elements vee-rings and Energizer ring:

Rod/Groove Dia.:	d_N/d1 = 80.0 mm
Groove Dia./Bore:	D1/D_N = 100.0 mm
TSS Part No.:	RCH1 0 0800
Material Set-Code:	N0O0C
Polypac Part. No.:	CH 393314

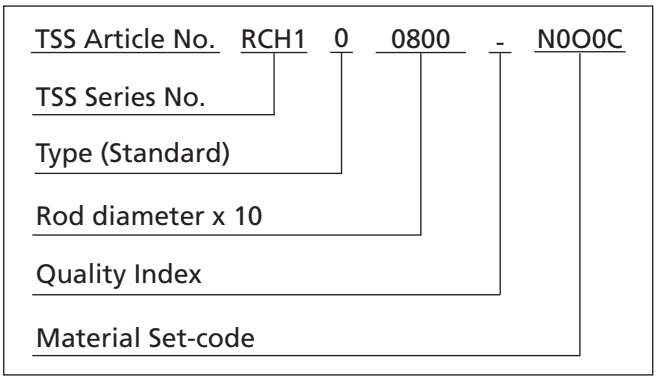

Table XXIII Installation dimensions / TSS Part No.

Rod/Groove Dia.	Groove Dia./ Bore	Groove Width	Diameter	Single Ring Height	Special Version		TSS Part No.	Polypac Ref. No.*
d_N h9/F8	**D1** H11	**L** -0.25	**d2** +/-0.1					
d1 h11	**D_N** H9/f8							
10.00	20.00	11.00	19.00	1.70			RCH000100	CH 078039/B
12.00	25.00	14.32	24.00	2.56			RCH000120	CH 098047/B
12.70	25.40	19.05	24.40	3.17			RCH000127	CH 100050
14.00	27.00	14.32	26.00	2.56	#		RCH000140	CH 106055/B
16.00	29.00	14.32	28.00	2.56			RCH000160	CH 114062/B
18.00	31.00	14.32	30.00	2.56			RCH000180	CH 122070/B
18.25	28.57	16.05	27.60	2.56			RCH000183	CH 112071
20.00	30.00	21.50	29.00	3.81			RCH000200	CH 118078
20.00	31.50	17.50	30.50	2.97			RCH100200	CH 124078

* As the Polypac Ref. No. does not refer to the material, please always state the full number if available for identification.
"#" and "^" see Table XXIV.

Rod/Groove Dia.	Groove Dia./ Bore	Groove Width	Diameter	Single Ring Height	Special Version		TSS Part No.	Polypac Ref. No.*
d_N h9/F8	**D1** H11	**L** -0.25	**d2** +/-0.1					
d1 h11	D_N H9/f8							
20.00	32.00	18.15	31.00	3.15	#	^	RCH200200	CH 125078
20.00	33.00	14.32	32.00	2.56			RCH300200	CH 129078/B
20.00	36.00	24.00	35.00	4.04			RCH400200	CH 141078
22.00	32.00	18.13	31.00	2.75			RCH000220	CH 125086
22.00	38.00	26.00	37.00	4.21			RCH100220	CH 149086
22.00	40.00	22.50	39.00	3.70		^	RCH200220	CH 157086
25.00	35.00	17.30	34.00	2.82			RCH000250	CH 137098
25.00	40.00	19.84	39.00	3.50			RCH100250	CH 157098
25.00	42.00	25.40	41.00	4.29			RCH200250	CH 165098
25.00	45.00	25.40	44.00	4.50	#	^	RCH300250	CH 177098
25.40	38.10	19.45	37.10	3.48			RCH000254	CH 150100
26.00	45.00	29.37	44.00	5.16			RCH000260	CH 177102
28.00	40.00	17.00	39.00	2.80			RCH000280	CH 157110
28.00	44.00	17.62	43.00	3.17	#		RCH100280	CH 173110/B
28.00	44.00	24.00	43.00	4.15	#		RCH200280	CH 173110/1
28.57	41.27	19.84	40.30	3.50			RCH000286	CH 162112
30.00	40.00	21.80	39.00	3.76			RCH000300	CH 157118
30.00	42.00	20.00	41.00	3.50			RCH100300	CH 165118
30.00	50.00	29.37	49.00	5.08			RCH300300	CH 196118
31.75	44.45	16.25	43.40	3.19			RCH000318	CH 175125/1
31.75	44.45	19.05	43.40	3.50			RCH100318	CH 175125
31.75	47.62	29.05	46.60	4.34		^	RCH200318	CH 187125
32.00	42.00	17.30	41.00	2.82			RCH000320	CH 165125
32.00	48.00	17.63	47.00	3.17	#	^	RCH100320	CH 188125/B
34.92	47.62	20.64	46.60	3.43			RCH000349	CH 187137
34.92	50.80	24.21	49.80	4.14	#		RCH100349	CH 200137
35.00	45.00	21.78	44.00	3.81			RCH000350	CH 177137
35.00	50.00	22.50	49.00	3.57			RCH100350	CH 196137
36.00	52.00	17.60	51.00	3.17			RCH100360	CH 204141/B
38.00	55.00	28.00	54.00	5.05			RCH000380	CH 216149
38.10	50.80	19.45	49.80	3.51			RCH000381	CH 200150
38.10	53.97	25.27	53.00	4.60			RCH100381	CH 212150
38.10	53.97	27.78	53.00	4.60			RCH200381	CH 212150/1

* As the Polypac Ref. No. does not refer to the material, please always state the full number if available for identification.
"#" and "^" see Table XXIV.

Rod/Groove Dia.	Groove Dia./ Bore	Groove Width	Diameter	Single Ring Height	Special Version		TSS Part No.	Polypac Ref. No.*
d_N h9/F8	D1 H11	L -0.25	d2 +/-0.1					
d1 h11	D_N H9/f8							
39.00	55.00	25.40	54.00	4.65		^	RCH000390	CH 216153
40.00	50.00	17.30	49.00	2.82			RCH000400	CH 196157
40.00	55.00	22.62	54.00	3.84			RCH100400	CH 216157
40.00	55.00	26.19	54.00	3.84			RCH200400	CH 216157/1
40.00	56.00	17.63	55.00	3.17			RCH300400	CH 220157/B
40.00	60.00	30.00	59.00	5.16	#		RCH400400	CH 236157
40.00	65.00	35.72	64.00	6.15			RCH500400	CH 255157
44.45	57.15	21.83	56.20	3.38			RCH000445	CH 225175
44.45	60.32	27.80	59.30	4.07	#		RCH100445	CH 237175
45.00	55.00	17.50	54.00	2.80			RCH000450	CH 216177
45.00	60.00	22.22	59.00	3.89			RCH100450	CH 236177
45.00	65.00	28.00	64.00	5.34			RCH200450	CH 255177
48.00	60.00	25.00	59.00	4.07		^	RCH000480	CH 236188
50.00	70.00	21.94	69.00	3.95			RCH200500	CH 275196/B
50.00	70.00	30.00	69.00	5.16			RCH300500	CH 275196
50.80	63.50	19.84	62.50	3.35			RCH000508	CH 250200
50.80	66.67	23.00	65.70	4.27			RCH100508	CH 262200
50.80	66.67	25.27	65.70	4.27			RCH200508	CH 262200/1
50.80	69.85	33.50	68.80	5.08	#		RCH300508	CH 275200
50.80	70.80	38.50	69.80	6.75	#	^	RCH400508	CH 278200
51.00	69.00	28.00	68.00	5.03			RCH000510	CH 271200
53.97	63.50	16.67	62.50	2.59	#		RCH000540	CH 250212
53.97	66.67	19.45	65.70	3.35	#	^	RCH100540	CH 262212
53.97	69.85	25.27	68.80	4.07			RCH200540	CH 275212
55.00	67.00	25.00	66.00	4.07			RCH000550	CH 263216
55.00	70.00	26.50	69.00	4.02			RCH100550	CH 275216
55.00	75.00	30.00	74.00	6.48			RCH200550	CH 295216
55.00	75.00	38.50	74.00	6.48			RCH400550	CH 295216/1
55.00	80.00	33.73	79.00	5.16	#		RCH500550	CH 314216
56.00	76.00	21.95	75.00	3.94		^	RCH000560	CH 299220/B
56.00	76.00	33.40	75.00	5.38			RCH100560	CH 299220
57.15	69.85	19.05	68.80	3.25			RCH000572	CH 275225
57.15	73.02	27.78	72.00	4.27	#		RCH100572	CH 287225

* As the Polypac Ref. No. does not refer to the material, please always state the full number if available for identification.
"#" and "^" see Table XXIV.

Rod/Groove Dia.	Groove Dia./ Bore	Groove Width	Diameter	Single Ring Height	Special Version		TSS Part No.	Polypac Ref. No.*
d_N h9/F8	**D1** H11	**L** -0.25	**d2** +/-0.1					
d1 h11	D_N H9/f8							
57.15	76.20	32.54	75.20	5.16			RCH200572	CH 300225
60.00	76.00	29.00	75.00	4.34			RCH100600	CH 299236
60.00	77.00	27.00	76.00	4.59			RCH200600	CH 303236
60.00	80.00	32.15	79.00	5.66			RCH300600	CH 314236
63.00	83.00	21.94	82.00	3.95			RCH000630	CH 326248/B
63.00	85.00	32.00	84.00	5.67			RCH100630	CH 334248
63.50	80.00	28.00	79.00	5.03		^	RCH200635	CH 314250
63.50	82.50	26.59	81.50	4.76			RCH300635	CH 325250
63.50	82.50	31.62	81.50	4.76			RCH400635	CH 325250/1
64.00	80.00	25.80	79.00	4.65			RCH000640	CH 314251
65.00	77.00	21.00	76.00	4.04			RCH000650	CH 303255
65.00	80.00	26.00	79.00	4.00	#		RCH100650	CH 314255
65.00	85.00	29.00	84.00	5.21			RCH200650	CH 334255
65.00	90.00	30.00	89.00	5.00		^	RCH300650	CH 354255
66.30	85.00	24.13	84.00	4.60	#		RCH000663	CH 334261
68.00	88.00	30.00	87.00	5.21	#		RCH000680	CH 346267
69.85	88.90	25.40	87.90	4.83			RCH100699	CH 350275
69.85	88.90	35.50	87.90	4.83			RCH200699	CH 350275/1
70.00	85.00	28.00	84.00	4.32			RCH100700	CH 334275
70.00	90.00	21.95	89.00	3.95		^	RCH200700	CH 354275/B
70.00	90.00	30.00	89.00	5.08			RCH300700	CH 354275
72.00	90.00	30.16	89.00	4.86		^	RCH000720	CH 354283
73.02	88.90	26.58	87.90	4.34			RCH000730	CH 350287
75.00	90.00	22.50	89.00	4.04			RCH000750	CH 354295
75.00	95.00	30.00	94.00	5.21			RCH100750	CH 374295
75.00	100.00	30.00	99.00	5.80		^	RCH300750	CH 393295
75.00	100.00	37.50	99.00	6.32	#	^	RCH400750	CH 393295/1
76.20	88.90	16.27	87.90	2.78			RCH000762	CH 350300
76.20	95.25	25.52	94.20	5.16	#		RCH100762	CH 375300/1
76.20	95.25	28.97	94.20	5.16			RCH200762	CH 375300
80.00	95.00	17.50	94.00	3.05			RCH000800	CH 374314
80.00	100.00	30.00	99.00	4.83			RCH100800	CH 393314
80.00	105.00	27.41	104.00	4.98		^	RCH200800	CH 413314/B

* As the Polypac Ref. No. does not refer to the material, please always state the full number if available for identification.
"#" and "^" see Table XXIV.

Rod/Groove Dia.	Groove Dia./ Bore	Groove Width	Diameter	Single Ring Height	Special Version		TSS Part No.	Polypac Ref. No.*
d_N h9/F8	D1 H11	L -0.25	d2 +/-0.1					
d1 h11	D_N H9/f8							
82.55	101.60	28.97	100.60	4.88			RCH100826	CH 400325
85.00	100.00	17.30	99.00	2.50			RCH000850	CH 393334
85.00	105.00	30.00	104.00	5.35			RCH100850	CH 413334
85.72	104.77	29.37	103.80	4.88			RCH100857	CH 412337
88.90	101.60	17.00	100.60	3.40			RCH000889	CH 400350
88.90	107.95	33.33	106.90	4.90		^	RCH200889	CH 425350/1
89.00	105.00	25.80	104.00	4.65			RCH000890	CH 413350
90.00	105.00	31.75	104.00	5.71			RCH000900	CH 413354
90.00	110.00	25.00	109.00	4.88			RCH100900	CH 433354/1
90.00	110.00	26.88	109.00	4.88			RCH200900	CH 433354
90.00	115.00	27.41	114.00	4.98		^	RCH300900	CH 452354/B
92.07	111.13	29.37	110.10	5.16	#	^	RCH000921	CH 437362
95.00	110.00	24.00	109.00	4.11			RCH000950	CH 433374
95.25	111.13	24.30	110.10	4.09	#	^	RCH000953	CH 437375
98.42	123.82	36.96	122.80	6.55			RCH100984	CH 487387
100.00	114.30	20.64	113.30	3.57			RCH001000	CH 450393
100.00	115.00	25.30	114.00	3.96			RCH101000	CH 452393
100.00	120.00	28.00	119.00	5.16			RCH201000	CH 472393
100.00	120.00	31.00	119.00	5.16	#		RCH301000	CH 472393/1
100.00	125.00	27.40	124.00	4.98		^	RCH401000	CH 492393/B
100.00	125.00	36.90	124.00	6.60		^	RCH501000	CH 492393
101.60	127.00	32.15	126.00	5.82	#		RCH001016	CH 500400
104.00	130.00	37.00	129.00	6.73			RCH001040	CH 511409
105.00	120.00	25.00	119.00	4.00			RCH001050	CH 472413
105.00	125.00	29.76	124.00	5.00		^	RCH201050	CH 492413
105.00	135.00	34.50	134.00	5.80		^	RCH301050	CH 531413
106.00	135.00	33.00	134.00	5.65	#	^	RCH001060	CH 531417
110.00	132.00	36.50	131.00	6.96			RCH201100	CH 519433
111.12	136.52	38.89	135.50	6.53	#	^	RCH001111	CH 537437
114.00	130.00	25.80	129.00	4.80			RCH001140	CH 511448
114.30	127.00	18.41	126.00	3.43			RCH001143	CH 500450
114.30	133.35	28.18	132.30	5.26		^	RCH101143	CH 525450
114.30	139.70	31.75	138.70	5.56	#	^	RCH201143	CH 550450

* As the Polypac Ref. No. does not refer to the material, please always state the full number if available for identification.
"#" and "^" see Table XXIV.

Rod/Groove Dia.	Groove Dia./ Bore	Groove Width	Diameter	Single Ring Height	Special Version		TSS Part No.	Polypac Ref. No.*
d_N h9/F8	**D1** H11	**L** -0.25	**d2** +/-0.1					
d1 h11	D_N H9/f8							
115.00	140.00	37.12	139.00	6.00		^	RCH101150	CH 551452
117.47	142.87	36.10	141.90	6.15	#	^	RCH001175	CH 562462
120.00	140.00	30.00	139.00	5.36			RCH001200	CH 551472
125.00	145.00	29.62	144.00	5.18			RCH001250	CH 570492
125.00	150.00	27.40	149.00	4.98			RCH101250	CH 590492/B
125.00	155.00	34.50	154.00	5.80	#	^	RCH201250	CH 610492
127.00	152.40	38.63	151.40	6.48			RCH001270	CH 600500
130.00	150.00	29.76	149.00	4.96			RCH001300	CH 590511
130.00	155.00	40.00	154.00	7.25	#	^	RCH101300	CH 610511
130.00	160.00	41.50	159.00	5.50	#		RCH201300	CH 629511
130.00	160.00	43.50	159.00	5.50	#		RCH301300	CH 629511/1
135.00	155.00	30.55	154.00	5.11			RCH001350	CH 610531
139.70	165.10	37.30	164.10	5.56	#	^	RCH001397	CH 650550
140.00	160.00	28.50	159.00	5.16			RCH001400	CH 629551
140.00	165.00	41.95	164.00	6.56	#		RCH101400	CH 649551
140.00	170.00	32.97	169.00	5.99		^	RCH201400	CH 669551/B
145.00	170.00	38.10	169.00	6.45		^	RCH001450	CH 669570
146.05	171.45	38.89	170.40	6.53		^	RCH001461	CH 675575
150.00	170.00	30.56	169.00	5.16			RCH001500	CH 669590
150.00	180.00	40.00	179.00	6.28		^	RCH101500	CH 708590
152.40	177.80	33.34	176.80	5.77		^	RCH001524	CH 700600
154.00	175.00	29.44	174.00	5.31		^	RCH001540	CH 688606
157.00	182.00	30.25	181.00	5.72		^	RCH001570	CH 716618
160.00	180.00	30.00	179.00	5.00	#		RCH001600	CH 708629
160.00	190.00	32.97	189.00	5.99		^	RCH101600	CH 748629/B
161.92	180.97	28.57	180.00	5.00	#	^	RCH001619	CH 712637
170.00	195.00	37.50	194.00	6.55		^	RCH001700	CH 767669
170.00	200.00	50.00	199.00	8.00	#	^	RCH101700	CH 787669
171.45	187.32	24.20	186.30	4.09	#	^	RCH001715	CH 737675
175.00	200.00	42.00	199.00	7.54			RCH001750	CH 787688
177.80	196.85	31.00	195.80	5.16		^	RCH001778	CH 775700
177.80	203.20	32.54	202.20	5.95		^	RCH101778	CH 800700
180.00	210.00	32.97	209.00	5.99			RCH001800	CH 826708/B

* As the Polypac Ref. No. does not refer to the material, please always state the full number if available for identification.
"#" and "^" see Table XXIV.

Rod/Groove Dia.	Groove Dia./ Bore	Groove Width	Diameter	Single Ring Height	Special Version		TSS Part No.	Polypac Ref. No.*
d_N h9/F8	D1 H11	L -0.25	d2 +/-0.1					
d1 h11	D_N H9/f8							
180.97	203.20	31.75	202.20	5.95			RCH000810	CH 800712
187.32	200.00	21.74	199.00	3.86		^	RCH001873	CH 787737
190.50	222.25	50.00	221.20	7.57		^	RCH001905	CH 875750
200.00	220.00	30.00	219.00	5.00			RCH002000	CH 866787
200.00	230.00	32.97	229.00	5.99		^	RCH102000	CH 905787/B
205.00	225.00	19.48	224.00	3.17		^	RCH002050	CH 885807
210.00	240.00	34.50	239.00	5.80			RCH002100	CH 944826
210.00	240.00	42.10	239.00	7.55		^	RCH102100	CH 944826/1
220.00	250.00	52.00	249.00	8.25		^	RCH002200	CH 984866
224.00	254.00	32.97	253.00	5.99		^	RCH002240	CH 1000881/B
228.60	254.00	38.10	253.00	6.30		^	RCH002286	CH 1000900
228.60	260.35	48.42	259.30	8.46			RCH102286	CH 1025900
240.00	270.00	45.00	269.00	8.03		^	RCH002400	CH 1062944
250.00	270.00	32.00	269.00	5.00			RCH002500	CH 1062984
254.00	279.40	38.10	268.40	5.95		^	RCH002540	CH 11001000
268.29	298.45	45.24	297.40	7.97		^	RCH002683	CH 11751056
269.88	307.98	53.97	307.00	8.44		^	RCH002699	CH 12121062
280.00	315.00	38.45	314.00	6.98		^	RCH002800	CH 12401102/B
288.93	307.98	28.57	307.00	5.21		^	RCH002889	CH 12121137
290.00	320.00	50.80	319.00	7.29		^	RCH002900	CH 12591141
300.00	320.00	32.00	319.00	5.00			RCH003000	CH 12591181
304.80	330.20	38.10	329.20	6.55		^	RCH003048	CH 13001200
310.00	330.00	30.00	329.00	5.50		^	RCH003100	CH 12991220
315.00	350.00	38.45	349.00	6.98		^	RCH003150	CH 13771240/B
320.00	365.00	55.00	364.00	8.50		^	RCH003200	CH 14371259
340.00	380.00	60.00	379.00	10.41		^	RCH003400	CH 14961338
350.00	390.00	60.00	389.00	10.54	#	^	RCH003500	CH 15351377
355.60	381.00	38.10	380.00	5.95			RCH003556	CH 15001400
368.30	406.40	57.15	405.40	10.00		^	RCH003683	CH 16001450
369.00	400.00	45.00	399.00	7.68		^	RCH003690	CH 15741452
400.00	440.00	54.00	439.00	8.38		^	RCH004000	CH 17321574
416.00	450.00	50.00	449.00	8.67		^	RCH004160	CH 17711637
420.00	460.00	51.60	459.00	8.40			RCH004200	CH 18111653
505.00	545.00	60.00	544.00	10.40		^	RCH005050	CH 21451988
700.00	750.00	73.00	749.00	6.35	#		RCH007000	CH 29532756

* As the Polypac Ref. No. does not refer to the material, please always state the full number if available for identification.
"#" and "^" see Table XXIV.

Table XXIV Explanation to "Special Version"

Not available with rubber V-ring		^		
Available upon request	#			

■ Installation Recommendation, Type POLYPAC® CH/NEI (with Back-up Ring)

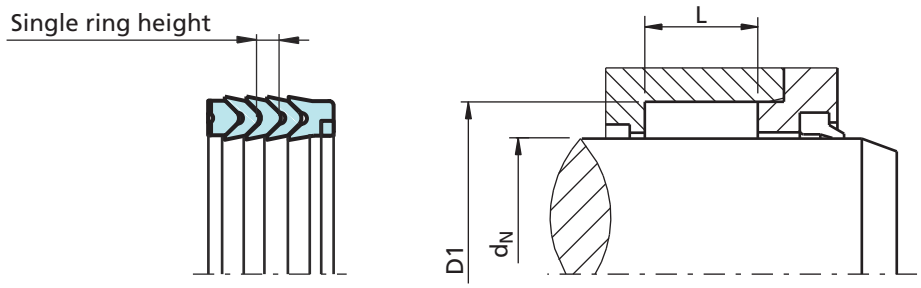

Figure 31 Installation drawing

Ordering Example

For a **rod** application of Veepac sealing element composed by: Support ring **with anti-extrusion ring**, 3 elements Vee-rings and energizer ring:

Rod diameter:	d_N = 80.0 mm
Groove diameter:	D1 = 100.0 mm
TSS Part No.:	RCH1 E 0800
Material Set-Code:	N0O0C
Polypac Part. No.:	CH 393314/NEI

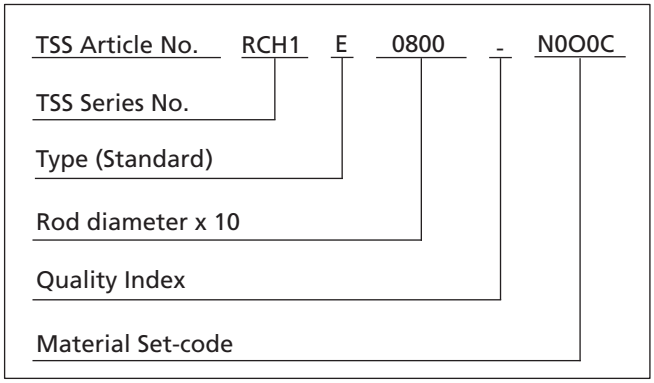

Table XXV Installation dimensions / TSS Part No.

Rod Diameter	Groove Diameter	Groove Width	Single Ring Height	Special Version		TSS Part No.	Polypac Ref. No.*
d_N h9/F8	**D1** H11	**L** -0.25					
10.00	20.00	11.00	1.70			RCH0E0100	CH 078039/B/NEI
28.00	44.00	17.62	3.17	#		RCH1E0280	CH 173110/B/NEI
28.00	44.00	24.00	4.15	#		RCH2E0280	CH 173110/1/NEI
30.00	45.00	22.20	3.80	#		RCH2E0300	CH 177118/NEI
30.00	50.00	29.37	5.08			RCH3E0300	CH 196118/NEI
32.00	48.00	17.63	3.17	#	^	RCH1E0320	CH 188125/B/NEI
36.00	51.00	24.00	4.14	#		RCH0E0360	CH 200141/NEI
40.00	55.00	22.62	3.84			RCH1E0400	CH 216157/NEI
40.00	55.00	26.19	3.84			RCH2E0400	CH 216157/1/NEI
45.00	60.00	22.22	3.89			RCH1E0450	CH 236177/NEI
48.00	62.00	22.22	3.73			RCH1E0480	CH 244188/NEI
50.00	65.00	24.60	4.34			RCH0E0500	CH 255196/NEI

* As the Polypac Ref. No. does not refer to the material, please always state the full number if available for identification.
"#" and "^" see Table XXVI.

Rod Diameter	Groove Diameter	Groove Width	Single Ring Height	Special Version		TSS Part No.	Polypac Ref. No.*
d_N h9/F8	**D1** H11	**L** -0.25					
50.00	65.00	26.00	4.34			RCH1E0500	CH 255196/1/NEI
50.00	70.00	30.00	5.16			RCH3E0500	CH 275196/NEI
53.97	73.02	31.75	5.16			RCH3E0540	CH 287212/NEI
55.00	70.00	26.50	4.02			RCH1E0550	CH 275216/NEI
55.00	75.00	31.00	6.48	#		RCH3E0550	CH 295216/2/NEI
55.00	75.00	38.50	6.48			RCH4E0550	CH 295216/1/NEI
56.00	76.00	33.40	5.38			RCH1E0560	CH 299220/NEI
60.00	75.00	19.00	3.00			RCH0E0600	CH 295236/NEI
60.00	76.00	29.00	4.34			RCH1E0600	CH 299236/NEI
60.00	80.00	32.15	5.66			RCH3E0600	CH 314236/NEI
63.00	85.00	32.00	5.67			RCH1E0630	CH 334248/NEI
63.50	82.50	26.59	4.76			RCH3E0635	CH 325250/NEI
63.50	82.50	31.62	4.76			RCH4E0635	CH 325250/1/NEI
65.00	80.00	26.00	4.00	#		RCH1E0650	CH 314255/NEI
65.00	85.00	29.00	5.21			RCH2E0650	CH 334255/NEI
69.85	85.72	23.81	4.09			RCH0E0699	CH 337275/NEI
70.00	83.00	25.00	4.25	#		RCH0E0700	CH 326275/NEI
75.00	90.00	22.50	4.04			RCH0E0750	CH 354295/NEI
75.00	95.00	31.50	5.21			RCH2E0750	CH 374295/1/NEI
80.00	100.00	30.00	4.83			RCH1E0800	CH 393314/NEI
85.00	105.00	30.00	5.35			RCH1E0850	CH 413334/NEI
85.72	104.77	29.37	4.88			RCH1E0857	CH 412337/NEI
90.00	110.00	26.88	4.88			RCH2E0900	CH 433354/NEI
95.00	110.00	24.00	4.11			RCH0E0950	CH 433374/NEI
95.00	120.00	41.00	7.50	#	^	RCH1E0950	CH 472374/NEI
100.00	120.00	28.00	5.16			RCH2E1000	CH 472393/NEI
106.00	135.00	33.00	5.65	#	^	RCH0E1060	CH 531417/NEI
110.00	130.00	27.00	5.00	#		RCH0E1100	CH 511433/1/NEI
110.00	130.00	30.00	5.00	#		RCH1E1100	CH 511433/NEI
110.00	132.00	36.50	6.96			RCH2E1100	CH 519433/NEI
110.00	135.00	41.50	7.00	#	^	RCH3E1100	CH 531433/NEI
115.00	130.00	25.49	4.35	#		RCH0E1150	CH 511452/NEI
120.00	140.00	30.00	5.36			RCH0E1200	CH 551472/NEI
120.00	145.00	39.50	7.25	#	^	RCH1E1200	CH 570472/NEI

* As the Polypac Ref. No. does not refer to the material, please always state the full number if available for identification.
"#" and "^" see Table XXVI.

Table XXVI Explanation to "Special Version"

Not available with rubber V-ring		^		
Available upon request	#			

POLYPAC® - VEEPAC CH/G5

Single Acting

Set of Chevron Rings

With Support and Pressure Energizing Ring

Material:
Fabbric Reinforced Rubber, Rubber, POM or PTFE

■ Veepac CH/G5 Set

Description

Veepac is a set of fabric reinforced Chevron rings comprising of a support ring (1), sealing rings (2) and a pressure energising ring (3). In the packing set the energising axial force is transferred between the individual packing rings so that each ring is pressed into positive contact with the rod surface. Additional to the standard material special material grades are available for a large variety of working conditions. The figure shows the Veepac design.

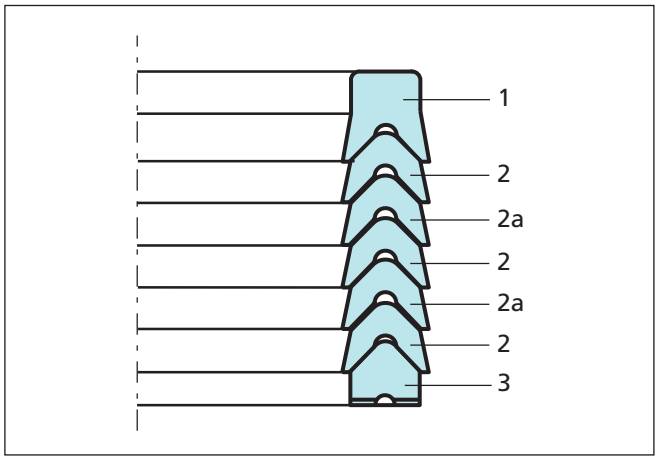

Figure 32 Veepac design

1) "U" or base rings in standard version manufactured in reinforced fabric comprising of layers of cotton impregnated with nitrile rubber compounded to resist extrusion. This component supports the Vee Rings for effective performances.

2) Vee Rings are made of reinforced cotton fabric and nitrile elastomer, in standard version, to give good resilience, sealing efficiency and extrusion resistance.

   Due to their specific design, Vee Rings are sensitive to fluid pressure variations, enabling them to deflect throughout their radial section, increase the seal loading and effectiveness in proportion to the pressures applied.

2a) Vee Rings are made of pure elastomer for high sealing efficienty.

3) Energiser or spreader rings are manufactured in acetal resin or PTFE. The function of this component is to ensure a uniform pressure distribution.

Advantages

- Very robust seal
- Non sensitive
- Adjustable
- Easy replacement in the field with split rings
- Extensive range of sizes (see symmetrical seals)
- Requires non super mating surfaces

Application Examples

- Mining equipment (with approvals)
- Excavators -Steel mills
- Water hydraulic
- Presses
- Ship hydraulics
- Stabilizer cylinders on cranes
- Continous casting equipment

Technical Data

Operating conditions

Pressure:	Up to 40 MPa
Velocity:	Up to 0.5 m/s
Temperature:	-30 °C to +200 °C depending on material
Media:	Hydraulic fluids Mineral oil, water glycol, water emulsions

Important Note:
The above data are maximum values and cannot be used at the same time. e.g. the maximum operating speed depends on material type, pressure, temperature and gap value.
Temperature range also dependent on medium.

Materials

The following material combination can be supplied:

	Standard	Non standard	Non standard
Material Code	N0ONC	V0PVA	V0OVA
Vee-Rings and Back-up Ring	Cotton Fabric NBR	Aramid Fabric FKM	Aramid Fabric FKM
Spreader*	POM	PTFE	POM
Elastomeric Vee Rings	NBR	FKM	FKM
Temperature Range °C	-30 +130	-20 +200	-20 +150

* The material for the spreader is depending from the diameter

Design Instructions

Lead in chamfers

In order to avoid damage to the Veepac during installation, lead in chamfers of min. 5 x 20° must be provided on the rods.

Rod Diameter	Lead in Chamfer
0 - 100	5 x 20°
101 - 200	7 x 20°
201 - 400	10 x 20°

Surface roughness

Parameter	Mating Surface µm	Groove Surface µm
R_{max}	1.00 - 4.00	< 16.0
$R_{z\ DIN}$	0.63 - 2.50	< 10.0
R_a	0.10 - 0.40	< 1.6

The material contact area R_{mr} should be approx. 50 to 70%, determined at a cut depth c = 0.25 x R_z, relative to a reference line of C_{ref}. 5%.

Clearance

The gap behind the seal should not be larger than 0.30 mm in diameter.

■ Installation Recommendation

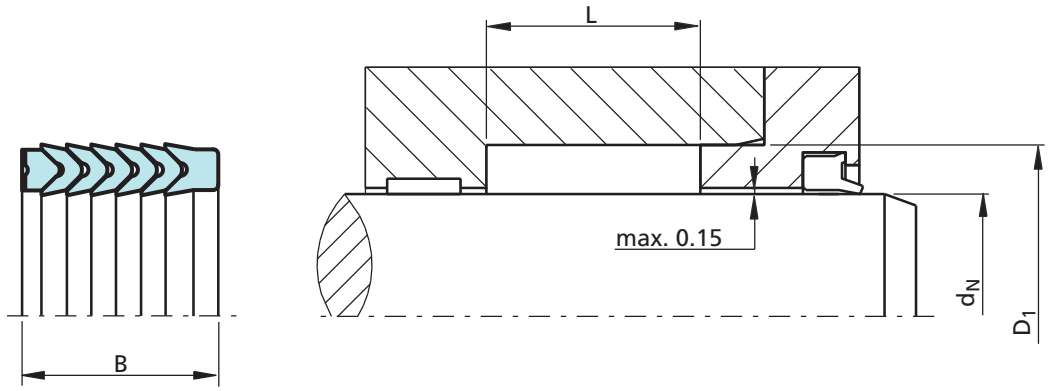

Figure 33 Installation drawing

Ordering example

Veepac Type RCH_G

Rod diameter:	d_N = 70.0 mm
Groove diameter:	D1 = 85.0 mm
Groove width:	L = 22.5 mm
TSS Part No.:	RCH0G0700 -
Material:	N0ONC (standard)

TSS Article No. RCH 0 G 0700 - N0ONC

- TSS Series No. — RCH
- Design code — 0
- Execution Mark — G
- Rod diameter x 10 — 0700
- Quality Index (Standard) — -
- Material code (Standard) — N0ONC

Polypac Ref. No.: CH 334275/G5

Table XXVII Installation dimensions / TSS Part No.

Rod Dia.	Groove Dia.	Groove Width	Seal Width	TSS Part No.	Description
d_N f8/h9	**D1** H11	**L** +0.2	**B**		
25.0	37.0	22.5	22.5	RCH0G0250	CH 145098/G5
25.0	40.0	22.5	22.5	RCH1G0250	CH 157098/G5
28.0	40.0	22.5	22.5	RCH0G0280	CH 157110/G5
30.0	45.0	22.5	22.5	RCH0G0300	CH 177118/G5
36.0	48.0	22.5	22.5	RCH0G0360	CH 188141/G5
40.0	55.0	22.5	22.5	RCH0G0400	CH 216157/G5
45.0	60.0	22.5	22.5	RCH0G0450	CH 236177/G5
45.0	65.0	27.5	27.5	RCH1G0450	CH 255177/G5
50.0	65.0	22.5	22.5	RCH0G0500	CH 255196/G5
56.0	71.0	22.5	22.5	RCH0G0560	CH 279220/G5
60.0	80.0	37.0	37.0	RCH0G0600	CH 314236/G5
65.0	85.0	40.0	40.0	RCH0G0650	CH 334255/G5
70.0	85.0	22.5	22.5	RCH0G0700	CH 334275/G5
70.0	90.0	40.0	40.0	RCH1G0700	CH 354275/G5
75.0	90.0	22.5	22.5	RCH0G0750	CH 354295/G5
80.0	95.0	22.5	22.5	RCH0G0800	CH 374314/G5
80.0	100.0	40.0	40.0	RCH1G0800	CH 393314/G5
85.0	100.0	22.5	22.5	RCH0G0850	CH 393334/G5
90.0	105.0	22.5	22.5	RCH0G0900	CH 413354/G5
90.0	110.0	40.0	40.0	RCH1G0900	CH 433354/G5
100.0	115.0	30.0	30.0	RCH0G1000	CH 452393/G5
100.0	120.0	40.0	40.0	RCH1G1000	CH 472393/G5
110.0	125.0	30.0	30.0	RCH0G1100	CH 492433/G5
110.0	130.0	40.0	40.0	RCH1G1100	CH 511433/G5
120.0	145.0	50.0	50.0	RCH0G1200	CH 570472/G5
125.0	140.0	34.0	34.0	RCH0G1250	CH 551492/G5
125.0	150.0	46.0	46.0	RCH1G1250	CH 590492/G5
140.0	155.0	34.0	34.0	RCH0G1400	CH 610551/G5
140.0	165.0	46.0	46.0	RCH1G1400	CH 649551/G5
160.0	180.0	40.0	40.0	RCH0G1600	CH 708629/G5
160.0	190.0	60.0	60.0	RCH1G1600	CH 748629/G5

CH Production numbers of the available dimensions in standard materials. For specific materials, please indicate existing Polypac designations.
Further sizes in chapter: Symmetrical Seals.

POLYPAC® - Selemaster SM

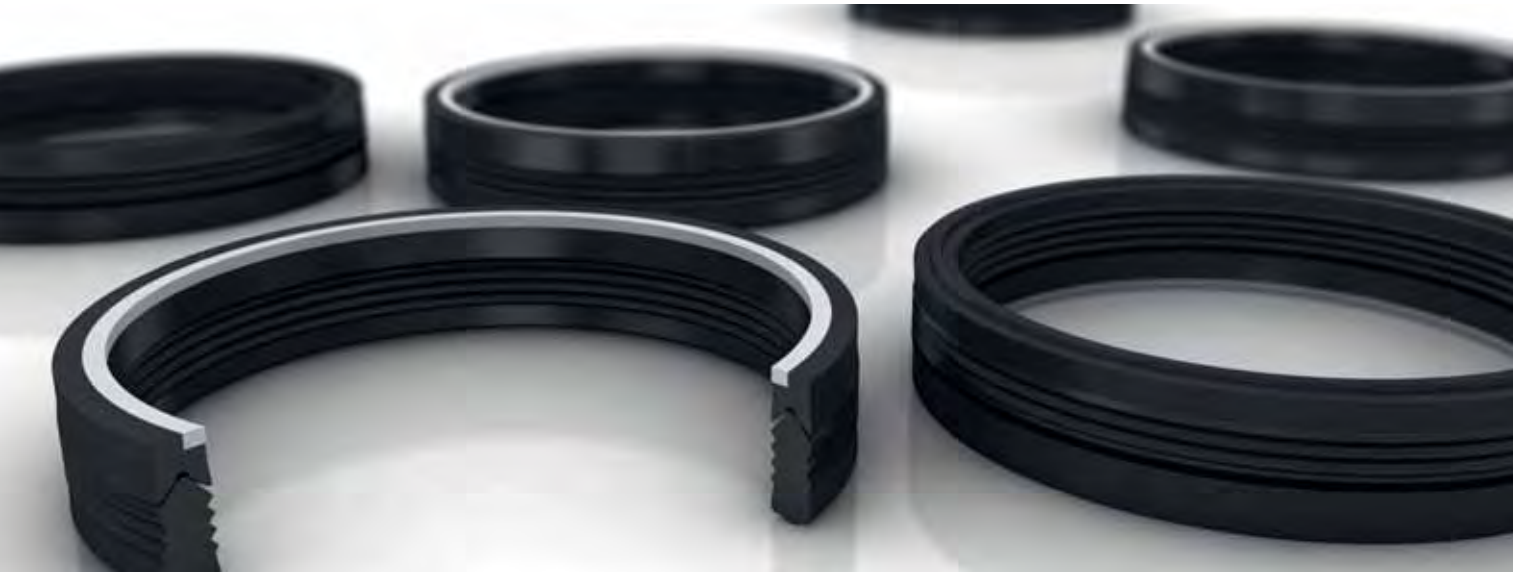

Single Acting

Compact Rod Seal

With Anti-extrusion Ring

Material:
Rubber + Fabric Reinforced
Rubber + POM

■ Selemaster SM

Description

The rod seal range has been designed to meet the needs of hydraulic equipments operating at high pressures and subjected to severe loading and vibration conditions.

The main sealing element is manufactured in a highly compression set resistant nitrile. The most important quality of this element is the design of the multiple sealing lips for maximum sealing efficiency and end face configuration, which ensures that the selemaster can tolerate vibrations and severe misalignment.

The support ring is made in cotton fabric reinforced nitrile elastomer; the "U" shape is energised when pressure is applied.

The last element is the anti-extrusion ring manufactured in POM.

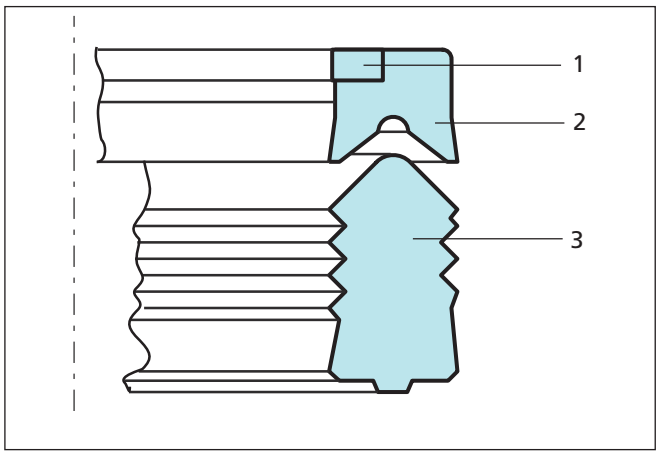

Figure 34 Selemaster design
1) POM anti-extrusion ring
2) Support ring in cotton fabric reinforced nitrile, NBR 80 Shore A
3) Sealing element in nitrile, NBR 80 Shore A

Note

- For low-temperature application -50 °C to +110 °C a special material - code N7C0 - Polypac Ref.: /1AX - 2187 is available

Advantages

- High sealing efficiency
- Effective sealing during vibration and shock loading
- Extrusion resistance at high pressure

Application Examples

- Earth-moving machines
- Excavators
- Lift platforms

Technical Data

Operating conditions

Pressure:	Up to 70 MPa
Velocity:	Up to 0.5 m/s
Temperature:	-40 °C to +130 °C
Media:	Hydraulic fluids Mineral oil-based hydraulic fluids, water and water/glycol emulsions
Groove type:	Open

Important Note:
The above data are maximum values and cannot be used at the same time. e.g. the maximum operating speed depends on material type, pressure, temperature and gap value.
Temperature range also dependent on medium.

■ Installation Recommendation

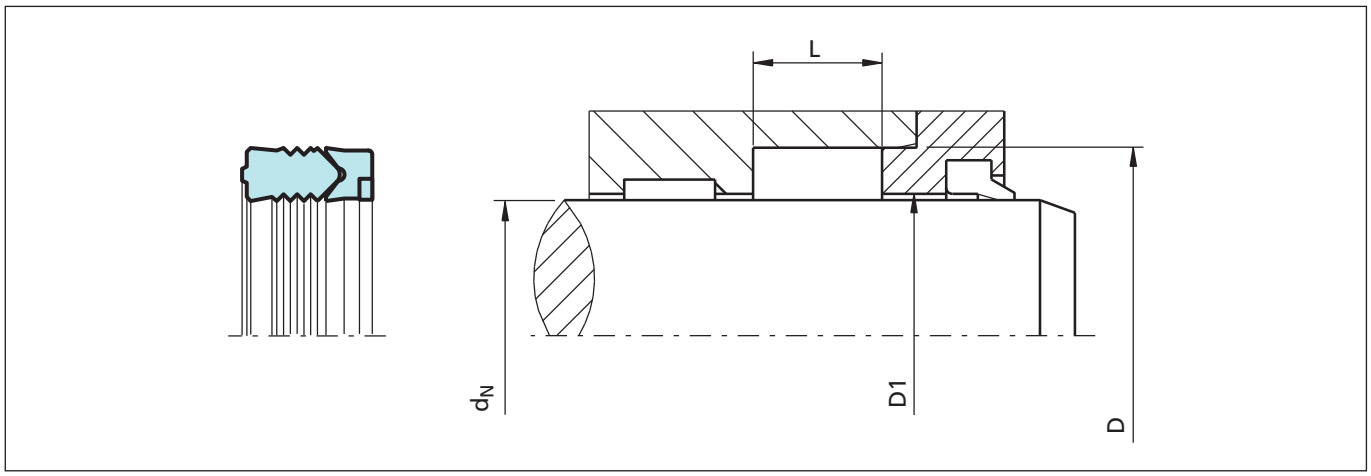

Figure 35 Installation drawing

Ordering Example

Selemaster RCK
Rod diameter: d_N = 50.0 mm
Groove diameter: D = 65.0 mm
Groove width E = 24.5 mm
TSS Part No.: RCK100500
Material code: N8C0 standard
Polypac Ref.: SM 255196/1AX

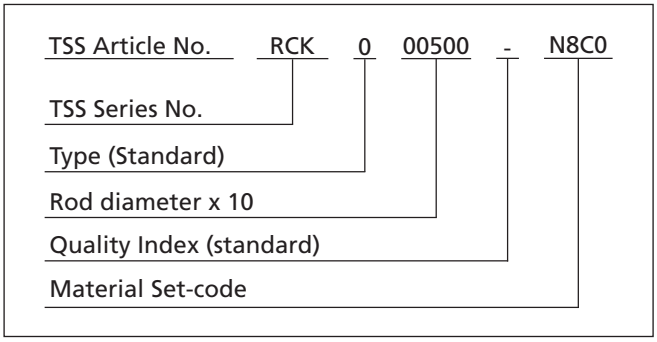

Table XXVIII Installation dimensions / TSS Article No.

Rod Dia.	Groove Dia.	Groove Width	Dia.		TSS Article No. Standard	Description
d_N h9	D H10	L +0.4	D_1 +/-0.1			
15.00	27.00	20.00	15.40		RCK000150-N8C0	SM 106059/1AX
20.00	33.00	20.00	20.40		RCK000200-N8C0	SM 129078/1AX
22.00	35.00	20.00	22.40		RCK000220-N8C0	SM 137086/1AX
25.00	38.00	20.00	25.40		RCK000250-N8C0	SM 149098/1AX
28.00	41.00	20.00	28.40		RCK000280-N8C0	SM 161110/1AX
30.00	43.00	20.00	30.40		RCK000300-N8C0	SM 169118/1AX
32.00	47.00	22.50	32.40		RCK000320-N8C0	SM 185125/1AX
35.00	45.00	25.60	35.40		RCK000350-N8C0	SM 177137/1AX
35.00	47.00	22.50	35.40		RCK100350-N8C0	SM 185137/1AX

^ Available upon request

Rod Dia.	Groove Dia.	Groove Width	Dia.		TSS Article No. Standard	Description
d_N h9	D H10	L +0.4	D_1 +/-0.1			
35.00	50.00	22.50	35.40		RCK200350-N8C0	SM 196137/1AX
36.00	51.00	22.50	36.40		RCK000360-N8C0	SM 200141/1AX
38.10	50.80	23.90	38.50		RCK000381-N8C0	SM 200150/1AX
40.00	52.00	22.50	40.40		RCK200400-N8C0	SM 204157/1AX
40.00	55.00	22.60	40.40		RCK100400-N8C0	SM 216157/1AX
40.00	60.00	30.00	40.40		RCK000400-N8C0	SM 236157/1AX
45.00	60.00	22.50	45.40		RCK000450-N8C0	SM 236177/1AX
45.00	65.00	28.00	45.40		RCK100450-N8C0	SM 255177/1AX
50.00	63.00	20.00	50.40		RCK000500-N8C0	SM 248196/1AX
50.00	65.00	24.50	50.40		RCK100500-N8C0	SM 255196/1AX
50.00	65.00	26.50	50.40	^	RCK200500-N8C0	SM 255196/2AX
50.00	65.00	22.50	50.40		RCK300500-N8C0	SM 255196/1BX
50.00	70.00	30.00	50.40		RCK400500-N8C0	SM 275196/1BX
50.00	70.00	31.90	50.40		RCK500500-N8C0	SM 275196/1AX
50.80	66.67	24.90	51.20		RCK000508-N8C0	SM 262200/1AX
55.00	70.00	25.00	55.40		RCK000550-N8C0	SM 275216/1AX
55.00	70.00	22.50	55.40		RCK100550-N8C0	SM 275216/2AX
55.00	75.00	32.00	55.40		RCK200550-N8C0	SM 295216/1AX
55.00	75.00	30.00	55.40		RCK300550-N8C0	SM 295216/2AX
56.00	71.00	25.00	56.40	^	RCK000560-N8C0	SM 279220/1AX
56.00	76.00	28.00	56.40		RCK100560-N8C0	SM 299220/1AX
60.00	75.00	25.00	60.40		RCK000600-N8C0	SM 295236/1AX
60.00	75.00	22.50	60.40		RCK100600-N8C0	SM 295236/2AX
60.00	77.00	27.00	60.40		RCK200600-N8C0	SM 303236/1AX
60.00	80.00	34.90	40.40		RCK300600-N8C0	SM 314236/1AX
63.00	83.00	29.00	63.40	^	RCK000630-N8C0	SM 326248/1AX
63.00	83.00	27.00	63.40		RCK100630-N8C0	SM 326248/1BX
63.50	82.55	26.60	63.90		RCK000635-N8C0	SM 325250/1AX
65.00	85.00	29.00	65.40		RCK000650-N8C0	SM 334255/1AX
70.00	83.00	25.00	70.40		RCK000700-N8C0	SM 326275/1AX
70.00	85.00	25.00	70.40		RCK200700-N8C0	SM 334275/1BX
70.00	85.00	22.50	70.40		RCK100700-N8C0	SM 334275/1AX
70.00	90.00	30.00	70.40		RCK300700-N8C0	SM 354275/1AX
70.00	90.00	31.90	70.40		RCK400700-N8C0	SM 354275/2AX
75.00	95.00	30.00	75.40		RCK100750-N8C0	SM 374295/2CX
75.00	95.00	28.00	75.40		RCK000750-N8C0	SM 374295/2AX

^ Available upon request

Rod Dia.	Groove Dia.	Groove Width	Dia.		TSS Article No. Standard	Description
d_N h9	D H10	L +0.4	D_1 +/-0.1			
76.20	95.25	24.60	76.60		RCK000762-N8C0	SM 375300/1AX
76.50	96.50	32.50	76.90		RCK000765-N8C0	SM 379301/1AX
80.00	100.00	30.00	80.40		RCK000800-N8C0	SM 393314/1AX
85.00	98.00	25.00	85.40		RCK000850-N8C0	SM 385334/1AX
85.00	105.00	30.00	85.40		RCK100850-N8C0	SM 413334/1AX
90.00	105.00	33.50	90.40		RCK100900-N8C0	SM 413354/1BX
90.00	105.00	25.00	90.40		RCK000900-N8C0	SM 413354/1AX
90.00	110.00	32.50	90.40		RCK300900-N8C0	SM 433354/2BX
90.00	110.00	30.00	90.40		RCK200900-N8C0	SM 433354/1AX
95.00	115.00	28.00	95.40		RCK000950-N8C0	SM 452374/1AX
100.00	114.30	24.20	100.40		RCK001000-N8C0	SM 450393/1AX
100.00	120.00	30.00	100.40		RCK101000-N8C0	SM 472393/1AX
105.00	118.00	25.00	105.40		RCK001050-N8C0	SM 464413/1AX
105.00	120.00	34.00	105.40		RCK101050-N8C0	SM 472413/1AX
110.00	130.00	32.50	110.40		RCK001100-N8C0	SM 511433/1AX
110.00	132.00	36.50	110.40		RCK101100-N8C0	SM 519433/1AX
115.00	130.00	30.00	115.70		RCK001150-N8C0	SM 511452/1AX
115.00	130.00	22.50	115.70		RCK101150-N8C0	SM 511452/2AX
120.00	135.00	22.50	120.70		RCK001200-N8C0	SM 531472/1AX
120.00	140.00	30.00	120.70	^	RCK101200-N8C0	SM 551472/1AX
125.00	145.00	29.60	125.70		RCK001250-N8C0	SM 570492/1AX
127.00	142.00	22.50	127.40		RCK001270-N8C0	SM 559500/1AX
130.00	150.00	28.00	130.70	^	RCK001300-N8C0	SM 590511/1AX
135.00	155.00	28.00	135.70		RCK001350-N8C0	SM 610531/1AX
140.00	160.00	28.00	140.70		RCK001400-N8C0	SM 629551/1AX
145.00	165.00	28.00	145.70		RCK001450-N8C0	SM 649570/1AX
150.00	170.00	28.00	150.70		RCK001500-N8C0	SM 669590/1AX
155.00	175.00	28.00	155.70		RCK001550-N8C0	SM 688610/1AX
158.50	180.00	28.00	159.20	^	RCK001585-N8C0	SM 708624/1AX
160.00	180.00	28.00	160.70		RCK001600-N8C0	SM 708629/1AX
165.00	185.00	30.00	165.70		RCK001650-N8C0	SM 729649/1AX
170.00	195.00	35.00	170.70		RCK001700-N8C0	SM 767669/1AX
180.00	205.00	35.00	180.70		RCK001800-N8C0	SM 807708/1AX
185.00	200.00	22.50	185.70		RCK001850-N8C0	SM 787728/2AX
185.00	210.00	35.00	210.70		RCK101850-N8C0	SM 826728/1AX
190.00	215.00	35.00	190.70		RCK001900-N8C0	SM 846748/2AX

^ Available upon request

Rod Dia.	Groove Dia.	Groove Width	Dia.		TSS Article No. Standard	Description
d_N h9	D H10	L +0.4	D_1 +/-0.1			
200.00	225.00	35.00	200.70		RCK002000-N8C0	SM 885787/1AX
215.00	240.00	35.00	215.70	^	RCK002150-N8C0	SM 944846/1AX
220.00	245.00	35.00	220.70		RCK002200-N8C0	SM 964866/1AX
225.00	250.00	35.00	225.70		RCK002250-N8C0	SM 984886/1AX
230.00	255.00	35.00	230.70		RCK002300-N8C0	SM 1003905/1AX
240.00	265.00	35.00	240.70		RCK002400-N8C0	SM 1043945/1AX
250.00	275.00	35.00	250.70		RCK002500-N8C0	SM 1082984/1AX
260.00	280.00	30.00	260.70		RCK002600-N8C0	SM 11021024/1AX
265.00	290.00	35.00	265.70		RCK002650-N8C0	SM 11411043/1AX
275.00	300.00	35.00	275.70		RCK002750-N8C0	SM 11811082/1AX
280.00	305.00	35.00	280.70		RCK002800-N8C0	SM 12011102/1AX
300.00	325.00	35.00	300.70		RCK003000-N8C0	SM 12791181/1AX
335.00	360.00	35.00	335.70		RCK003350-N8C0	SM 14171318/1AX

^ Available upon request

POLYPAC® - Balsele

Single Acting

Compact Seal

Without and with Back-up Ring

Material:
Fabric Reinforced NBR + POM

■ Balsele

Description

The Balsele is a compact rod seal consisting of an elastomeric sealing element and an integrated fabric reinforced base.

Due to the radial pre-load an excellent sealing performance will be achieved even at low pressures. The fabric reinforced base prevents the seal from extrusion. Where extrusion gaps are greater than those specified or for higher pressure conditions the serie B/NEI with incorporated anti-extrusion ring shall be selected.

Design

1) Sealing element manufactured from a specially developed nitrile compound particularly resistant to compression set. The sealing lips are produced to give optimum efficiency and wear resistance.
2) The reinforced base of the seal element is of cotton fabric impregnated with nitrile elastomer and vulcanised with the sealing element 1, thus forming an integral component.
3) Guide rings or antiextrusion rings are made from acetal resin. As previously described these rings maintain the seal in the optimum position for maximum performance, and minimise all possible extrusion gaps.

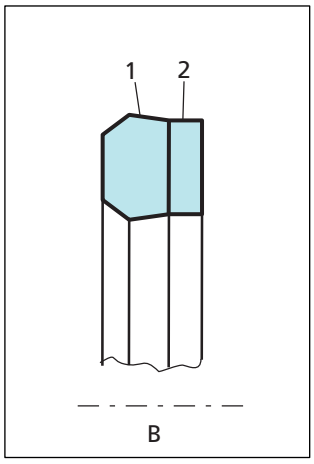

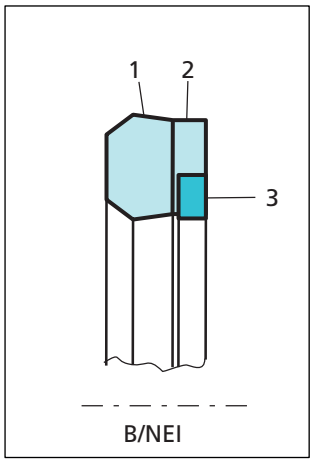

Advantages

- Small cross sections
- Good chemical resistance
- Large size range
- No hydrolyses problems
- Wide temperature range

Application Examples

- Standard hydraulic cylinders (low to medium duty)
- Mobile hydraulic
- Water based fluids equipment
- After market
- Presses

Technical Data

Operating conditions

Pressure:	Up to 25 MPa (Type B) Up to 40 MPa (Type B/NEI)
Velocity:	Up to 0.5 m/s
Temperature:	- 30 °C to +130 °C
Media:	Mineral oil, water, air

Important Note:
The above data are maximum values and cannot be used at the same time. e.g. the maximum operating speed depends on material type, pressure, temperature and gap value.
Temperature range also dependent on medium.

Materials

For type B:
NBR + cotton fabric
Material code N8C0

for type B/NEI:
NBR + cotton fabric
Back-up Ring material POM
Material code N8CO

Design Instructions

Lead in chamfers

In order to avoid damage to the Balsele during installation, lead in chamfers of min. 5 x 20° must be provided on the rods.

Rod Diameter	Lead in Chamfer
0 - 100	5 x 20°
101 - 200	7 x 20°
201 - 400	10 x 20°

Surface roughness

Parameter	Mating Surface µm	Groove Surface µm
R_{max}	0.63 - 2.50	< 16.0
$R_{z\ DIN}$	0.40 - 1.60	< 10.0
R_a	0.05 - 0.20	< 1.6

The material contact area R_{mr} should be approx. 50 to 70%, determined at a cut depth c = 0.25 x R_z, relative to a reference line of $C_{ref.}$ 5%.

Clearance

Operating max. Pressure MPa	Radial Clearance S max.
16	0.20
25	0.10

For Type B/NEI (with Back-up Ring) the values can be double and with similar gap measure Smax. = 0.10 a pressure of 40 MPa can be tightened.

■ Installation Recommendation

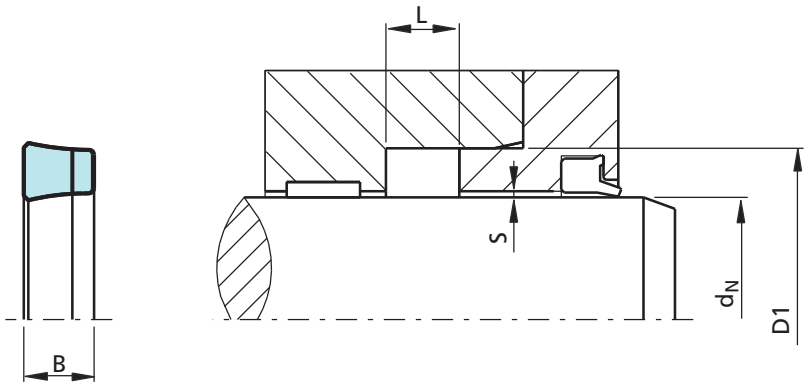

Figure 36 Installation drawing

Ordering example

Balsele Type B
Rod diameter: d_N = 6.0 mm
Groove diameter: D1 = 10.0 mm
Groove width L = 5.0 mm
TSS Part No.: RUM000060 -
Compound: N8C0 (NBR + cotton fabric)

TSS Article No. RUM 0 0 0060 - N8C0

- TSS Series No.
- Design code
- Execution Mark
- Rod diameter x 10
- Quality Index (Standard)
- Material code (Seal ring)

Polypac Ref. No.: B 039023

Table XXIX Installation dimensions / TSS Article No.

Note	Rod Diameter	Groove Diameter	Groove Width	Seal Width	TSS Article No.	Description
	d_N h11	D_1 H11	L +0.1	B		
*	4.76	12.70	6.40	5.75	RUM000047-N8C0	B 050018
*	6.00	10.00	5.00	4.00	RUM000060-N8C0	B 039023
*	**6.00**	**14.00**	**6.40**	**5.90**	**RUM100060-N8C0**	**B 055024**
*	6.35	14.28	6.85	6.30	RUM000063-N8C0	B 056025
*	8.00	15.00	6.40	5.90	RUM000080-N8C0	B 059031
*	10.00	17.00	6.40	5.90	RUM100100-N8C0	B 066039
*	11.11	20.63	7.65	7.00	RUM000111-N8C0	B 081043
*	12.00	18.00	7.50	7.00	RUM000120-N8C0	B 070047
*	12.00	19.00	6.30	5.80	RUM100120-N8C0	B 075047

Dimensions printed in **bold** type correspond to ISO/DIN 5597 and ISO 5597/1. * Split groove
Additional dimensions can be delivered on request.

Note	Rod Diameter	Groove Diameter	Groove Width	Seal Width	TSS Article No.	Description
	d_N h11	D_1 H11	L +0.1	B		
*	**12.00**	**20.00**	**6.40**	**5.80**	**RUM200120-N8C0**	**B 078047**
*	12.70	19.05	5.25	4.80	RUM000127-N8C0	B 075050
*	12.70	20.63	6.85	6.30	RUM100127-N8C0	B 081050
*	12.70	22.22	7.65	7.00	RUM200127-N8C0	B 087050
*	14.00	22.00	6.50	5.90	RUM000140-N8C0	B 086055
*	14.28	23.81	7.65	7.00	RUM000142-N8C0	B 093056
*	15.00	23.00	6.40	5.80	RUM000150-N8C0	B 090059
*	15.87	22.22	5.25	4.80	RUM000158-N8C0	B 087062
*	15.87	25.40	7.65	7.00	RUM100158-N8C0	B 100062
*	**16.00**	**24.00**	**6.40**	**5.90**	**RUM000160-N8C0**	**B 094063/1**
*	16.00	24.00	7.00	6.50	RUM100160-N8C0	B 094063
*	17.46	30.16	10.00	9.20	RUM000174-N8C0	B 118068
*	18.00	25.00	8.00	7.30	RUM100180-N8C0	B 098070
*	**18.00**	**26.00**	**6.40**	**5.80**	**RUM200180-N8C0**	**B 102070/1**
*	18.00	26.00	7.00	6.50	RUM300180-N8C0	B 102070
*	18.00	28.00	6.30	5.70	RUM400180-N8C0	B 110070
*	19.05	28.58	9.00	8.00	RUM100190-N8C0	B 112075
*	19.05	31.75	8.50	7.70	RUM000190-N8C0	B 125075/1
*	20.00	27.00	6.50	5.90	RUM000200-N8C0	B 106078
*	**20.00**	**28.00**	**6.30**	**5.70**	**RUM200200-N8C0**	**B 110078/1**
*	20.00	28.00	7.00	6.50	RUM100200-N8C0	B 110078
*	20.00	30.00	8.50	7.60	RUM300200-N8C0	B 118078
*	20.00	35.00	11.50	10.60	RUM400200-N8C0	B 137078
*	20.63	33.33	10.00	9.20	RUM000206-N8C0	B 131081
*	22.00	30.00	6.50	5.90	RUM000220-N8C0	B 118086/1
*	22.00	30.00	7.00	6.50	RUM100220-N8C0	B 118086
*	22.00	35.00	10.00	9.20	RUM400220-N8C0	B 137086
*	22.22	31.75	9.20	8.60	RUM000222-N8C0	B 125087
*	23.81	36.51	10.00	9.20	RUM000238-N8C0	B 143093
*	24.00	32.00	7.50	6.90	RUM000240-N8C0	B 125094
*	24.00	34.00	6.50	5.90	RUM100240-N8C0	B 134094
	25.00	**33.00**	**6.40**	**5.80**	**RUM000250-N8C0**	**B 129098/1**
*	25.00	35.00	9.00	8.40	RUM100250-N8C0	B 137098
*	25.00	38.00	10.00	9.15	RUM200250-N8C0	B 149098
*	25.00	44.00	12.50	11.40	RUM300250-N8C0	B 173098
*	25.40	31.75	5.25	4.70	RUM000254-N8C0	B 125100

Dimensions printed in **bold** type correspond to ISO/DIN 5597 and ISO 5597/1. * Split groove
Additional dimensions can be delivered on request.

Note	Rod Diameter	Groove Diameter	Groove Width	Seal Width	TSS Article No.	Description
	d_N h11	D_1 H11	L +0.1	B		
*	25.40	34.92	6.85	6.20	RUM100254-N8C0	B 137100
*	25.40	38.10	10.00	9.20	RUM200254-N8C0	B 150100
*	25.40	41.27	11.60	10.70	RUM300254-N8C0	B 162100
*	26.00	40.00	10.00	9.20	RUM000260-N8C0	B 157102/1
*	27.00	35.00	6.50	5.90	RUM000270-N8C0	B 137106
	28.00	**36.00**	**6.40**	**5.80**	**RUM000280-N8C0**	**B 141110**
*	28.19	39.68	8.00	7.30	RUM000281-N8C0	B 156111
*	28.57	41.27	10.00	9.20	RUM100285-N8C0	B 162112
*	28.57	44.45	11.60	10.70	RUM200285-N8C0	B 175112
	30.00	37.50	6.50	6.00	RUM100300-N8C0	B 147118
	30.00	38.00	6.40	5.80	RUM000300-N8C0	B 149118
*	30.00	40.00	7.50	6.80	RUM300300-N8C0	B 157118
*	30.00	41.60	8.00	7.20	RUM500300-N8C0	B 164118
*	30.00	45.00	9.00	8.50	RUM600300-N8C0	B 177118/1
*	30.00	50.00	14.50	13.50	RUM700300-N8C0	B 196118
*	31.75	47.62	11.60	10.60	RUM200317-N8C0	B 187125
	32.00	40.00	6.30	5.80	RUM000320-N8C0	B 157125/1
*	32.00	40.00	9.00	8.50	RUM100320-N8C0	B 157125
*	34.92	50.80	10.00	9.10	RUM100349-N8C0	B 200137/1
*	34.92	50.80	11.60	10.60	RUM200349-N8C0	B 200137/2
	35.00	43.00	6.50	6.00	RUM000350-N8C0	B 169137
*	35.00	45.00	8.00	7.20	RUM100350-N8C0	B 177137/5
*	35.00	45.00	13.50	12.80	RUM300350-N8C0	B 177137/2
*	35.00	50.00	11.50	10.60	RUM400350-N8C0	B 196137
	36.00	43.00	6.50	6.00	RUM000360-N8C0	B 169141
	36.00	44.00	6.40	5.90	RUM100360-N8C0	B 173141
*	37.72	50.80	9.00	8.20	RUM000377-N8C0	B 200148
*	38.00	50.00	9.50	8.80	RUM000380-N8C0	B 196149
*	38.10	50.80	12.40	11.90	RUM100381-N8C0	B 200150/1
*	38.10	53.97	11.50	10.50	RUM400381-N8C0	B 212150/1
*	38.10	53.97	12.83	12.00	RUM500381-N8C0	B 212150/2
	40.00	48.00	6.50	6.00	RUM000400-N8C0	B 188157
	40.00	**50.00**	**8.00**	**7.40**	**RUM100400-N8C0**	**B 196157/3**
*	40.00	50.00	11.00	10.30	RUM300400-N8C0	B 196157
*	40.00	50.00	13.50	12.80	RUM400400-N8C0	B 196157/2
*	40.00	60.00	14.50	13.30	RUM700400-N8C0	B 236157

Dimensions printed in **bold** type correspond to ISO/DIN 5597 and ISO 5597/1. * Split groove
Additional dimensions can be delivered on request.

Note	Rod Diameter	Groove Diameter	Groove Width	Seal Width	TSS Article No.	Description
	d_N h11	D_1 H11	L +0.1	B		
	41.27	57.12	11.60	10.70	RUM000412-N8C0	B 225162
	42.00	50.00	6.40	6.00	RUM000420-N8C0	B 196165
*	42.92	55.50	8.90	8.10	RUM000429-N8C0	B 218169
	43.00	53.00	9.00	8.40	RUM000430-N8C0	B 208169
	44.00	53.00	8.00	7.30	RUM000440-N8C0	B 208173
*	44.45	60.32	11.60	10.70	RUM100444-N8C0	B 237175
*	44.45	61.91	11.60	10.60	RUM200444-N8C0	B 243175
	45.00	53.00	6.50	6.00	RUM000450-N8C0	B 208177
	45.00	**55.00**	**8.00**	**7.30**	**RUM100450-N8C0**	**B 216177**
*	45.00	63.00	11.00	10.00	RUM500450-N8C0	B 248177
*	45.00	65.00	14.50	13.30	RUM600450-N8C0	B 255177
	45.97	55.37	8.33	7.60	RUM000459-N8C0	B 218181
	46.00	56.00	8.00	7.30	RUM100460-N8C0	B 220181
*	47.23	60.32	10.00	9.20	RUM000472-N8C0	B 237186
*	47.62	63.50	11.50	10.60	RUM000476-N8C0	B 250187
*	48.00	60.00	7.00	6.30	RUM000480-N8C0	B 236188
*	50.00	58.00	12.50	12.00	RUM000500-N8C0	B 228196
	50.00	**60.00**	**8.00**	**7.30**	**RUM100500-N8C0**	**B 236196**
*	50.00	60.00	10.00	9.30	RUM200500-N8C0	B 236196/1
*	50.00	62.00	9.50	8.50	RUM300500-N8C0	B 244196/1
*	50.00	64.50	11.50	10.50	RUM400500-N8C0	B 254196
*	50.00	70.00	14.50	13.30	RUM600500-N8C0	B 275196
	50.80	60.35	11.00	10.30	RUM000508-N8C0	B 237200
*	50.80	66.67	11.50	10.50	RUM100508-N8C0	B 262200
*	53.97	73.02	14.80	13.80	RUM000539-N8C0	B 287212
	55.00	70.00	10.50	9.60	RUM200550-N8C0	B 275216
*	55.00	75.00	14.50	13.30	RUM300550-N8C0	B 295216
	56.00	66.00	8.00	7.30	RUM000560-N8C0	B 259220
*	56.00	76.00	14.50	13.40	RUM200560-N8C0	B 299220
	57.00	67.00	8.00	7.30	RUM000570-N8C0	B 263224
	57.15	69.85	10.00	9.20	RUM000571-N8C0	B 275225
*	57.15	73.02	11.50	10.60	RUM100571-N8C0	B 287225
*	57.15	76.20	10.00	8.90	RUM200571-N8C0	B 300225
*	57.15	76.20	13.50	12.40	RUM300571-N8C0	B 300225/1
*	57.15	76.20	14.28	13.20	RUM400571-N8C0	B 300225/2
	60.00	69.50	7.00	6.40	RUM000600-N8C0	B 273236

Dimensions printed in **bold** type correspond to ISO/DIN 5597 and ISO 5597/1. * Split groove
Additional dimensions can be delivered on request.

Note	Rod Diameter	Groove Diameter	Groove Width	Seal Width	TSS Article No.	Description
	d_N h11	D_1 H11	L +0.1	B		
	60.00	70.00	8.00	7.50	RUM100600-N8C0	B 275236
	60.00	71.00	9.60	9.00	RUM400600-N8C0	B 279236
	60.00	72.00	10.00	9.20	RUM500600-N8C0	B 283236
	60.00	75.00	13.00	12.10	RUM600600-N8C0	B 295236
*	60.00	80.00	14.50	13.50	RUM700600-N8C0	B 314236
*	60.32	79.37	14.80	13.80	RUM000603-N8C0	B 312237
	61.00	69.00	8.50	7.90	RUM000610-N8C0	B 271240
	63.00	75.00	9.60	8.80	RUM000630-N8C0	B 295248/1
*	63.00	83.00	14.50	13.30	RUM300630-N8C0	B 326248
*	63.50	82.55	14.28	13.13	RUM200635-N8C0	B 325250/1
	65.00	75.00	8.50	7.80	RUM000650-N8C0	B 295255/1
	65.00	75.00	13.50	12.30	RUM100650-N8C0	B 295255
	65.00	77.00	9.60	8.80	RUM200650-N8C0	B 303255
	65.00	80.00	11.50	10.60	RUM300650-N8C0	B 314255
*	65.00	85.00	14.50	13.50	RUM600650-N8C0	B 334255
*	65.00	95.00	17.50	15.80	RUM500650-N8C0	B 374255
*	66.00	80.00	11.00	10.10	RUM000660-N8C0	B 314259
*	66.67	85.72	14.80	13.70	RUM000667-N8C0	B 337262
	68.00	76.00	8.00	7.40	RUM000680-N8C0	B 299267
	70.00	80.00	8.00	7.30	RUM100700-N8C0	B 314275/1
	70.00	82.00	9.60	8.80	RUM300700-N8C0	B 322275/1
	70.00	84.00	12.50	11.20	RUM500700-N8C0	B 330275
	70.00	85.00	12.00	11.00	RUM600700-N8C0	B 334275/1
*	70.00	90.00	14.50	13.50	RUM800700-N8C0	B 354275
*	73.02	88.90	12.50	11.50	RUM000730-N8C0	B 350287
	75.00	85.00	8.00	7.30	RUM000750-N8C0	B 334295/1
	75.00	89.50	11.50	10.50	RUM200750-N8C0	B 352295
	75.00	90.00	11.50	10.60	RUM300750-N8C0	B 354295
*	75.00	95.00	11.00	10.00	RUM500750-N8C0	B 374295/1
	76.00	84.00	8.50	7.90	RUM000760-N8C0	B 330299
	76.20	88.90	9.40	8.70	RUM000762-N8C0	B 350300
*	76.20	95.25	14.80	13.70	RUM200762-N8C0	B 375300
	77.00	87.00	8.00	7.30	RUM000770-N8C0	B 342303
	79.00	88.50	7.00	6.40	RUM000790-N8C0	B 348311
	80.00	90.00	8.00	7.30	RUM000800-N8C0	B 354314
	80.00	92.00	9.60	8.80	RUM100800-N8C0	B 362314

Dimensions printed in **bold** type correspond to ISO/DIN 5597 and ISO 5597/1. * Split groove
Additional dimensions can be delivered on request.

Note	Rod Diameter	Groove Diameter	Groove Width	Seal Width	TSS Article No.	Description
	d_N h11	D_1 H11	L +0.1	B		
	80.00	96.00	10.50	9.60	RUM400800-N8C0	B 377314
	80.00	100.00	14.50	13.40	RUM600800-N8C0	B 393314
	81.00	91.00	8.00	7.30	RUM000810-N8C0	B 358318
	82.55	101.60	14.80	13.70	RUM000825-N8C0	B 400325/1
	84.00	94.00	8.00	7.30	RUM100840-N8C0	B 370330
	85.00	95.00	8.00	7.30	RUM000850-N8C0	B 374334
	85.00	95.00	8.50	7.80	RUM100850-N8C0	B 374334/1
	85.00	97.00	9.60	9.00	RUM200850-N8C0	B 381334
	85.00	100.00	12.00	10.80	RUM300850-N8C0	B 393334/1
	85.00	105.00	14.50	13.40	RUM400850-N8C0	B 413334
*	85.00	110.00	13.50	12.20	RUM500850-N8C0	B 433334
*	85.72	104.77	14.80	13.80	RUM000857-N8C0	B 412337
*	85.72	111.12	19.50	18.20	RUM100857-N8C0	B 437337
	88.00	96.00	8.00	7.50	RUM000880-N8C0	B 377346
	88.90	101.60	10.00	9.20	RUM000889-N8C0	B 400350
*	88.90	107.95	12.70	11.60	RUM100889-N8C0	B 425350
	90.00	102.00	9.60	8.80	RUM100900-N8C0	B 401354
	90.00	110.00	12.50	11.40	RUM500900-N8C0	B 433354
	91.00	99.00	8.50	7.90	RUM000910-N8C0	B 389358
*	92.07	117.45	13.20	12.00	RUM100920-N8C0	B 462362/1
	95.00	105.00	11.00	10.30	RUM000950-N8C0	B 413374
	95.00	107.00	12.50	11.70	RUM100950-N8C0	B 421374
	95.00	110.00	12.50	11.36	RUM200950-N8C0	B 433374
	95.25	114.30	13.50	12.40	RUM000952-N8C0	B 450375
*	95.25	120.65	19.50	18.20	RUM100952-N8C0	B 475375
	96.00	105.00	8.50	7.90	RUM000960-N8C0	B 413377
	96.00	108.00	12.50	11.70	RUM100960-N8C0	B 425377
	97.00	108.00	12.50	11.80	RUM000970-N8C0	B 425381
	98.00	107.50	7.00	6.20	RUM000980-N8C0	B 423385
	100.00	113.00	13.50	12.70	RUM001000-N8C0	B 444393
	100.00	115.00	11.50	10.60	RUM101000-N8C0	B 452393/1
	100.00	120.00	12.00	11.20	RUM301000-N8C0	B 472393/1
	100.00	120.00	14.50	13.40	RUM401000-N8C0	B 472393
	101.50	123.82	17.18	16.00	RUM001015-N8C0	B 487400
	101.60	127.00	19.50	18.00	RUM001016-N8C0	B 500400
	103.00	115.00	12.50	11.80	RUM001030-N8C0	B 452405

Dimensions printed in **bold** type correspond to ISO/DIN 5597 and ISO 5597/1.
Additional dimensions can be delivered on request.

* Split groove

Note	Rod Diameter	Groove Diameter	Groove Width	Seal Width	TSS Article No.	Description
	d_N h11	D_1 H11	L +0.1	B		
	104.00	120.00	12.00	11.20	RUM001040-N8C0	B 472409
	104.00	130.00	19.50	18.00	RUM101040-N8C0	B 511409
	105.00	115.00	11.00	10.00	RUM001050-N8C0	B 452413
	105.00	117.00	12.50	11.80	RUM101050-N8C0	B 460413
	105.00	120.00	12.00	11.00	RUM201050-N8C0	B 472413
	105.00	125.00	12.50	11.40	RUM301050-N8C0	B 492413
	106.00	116.00	8.50	7.80	RUM001060-N8C0	B 457417
	107.00	115.00	8.00	7.40	RUM001070-N8C0	B 452421
	107.95	133.35	19.00	17.70	RUM001079-N8C0	B 525425
	110.00	125.00	12.00	11.20	RUM001100-N8C0	B 492433
	110.00	140.00	16.50	15.00	RUM301100-N8C0	B 551433
	114.30	133.35	12.40	11.40	RUM001143-N8C0	B 525450
	114.30	139.70	19.50	18.00	RUM101143-N8C0	B 550450
	115.00	125.00	8.00	7.40	RUM001150-N8C0	B 492452
	115.00	135.00	16.00	14.80	RUM101150-N8C0	B 531452
	118.00	130.00	12.50	11.80	RUM001180-N8C0	B 511464
	120.00	130.00	8.00	7.40	RUM001200-N8C0	B 511472
	120.00	132.70	10.00	9.20	RUM101200-N8C0	B 522472
	120.00	140.00	12.50	11.40	RUM301200-N8C0	B 551472
	120.65	146.05	19.50	18.20	RUM001206-N8C0	B 575475
	123.00	133.00	8.00	7.40	RUM001230-N8C0	B 523484
	125.00	135.00	8.50	7.80	RUM001250-N8C0	B 531492
	125.00	140.00	12.00	11.00	RUM101250-N8C0	B 551492
	126.00	134.00	8.00	7.50	RUM001260-N8C0	B 527496
	126.00	136.00	8.50	7.80	RUM101260-N8C0	B 535496
	127.00	139.70	10.00	8.70	RUM001270-N8C0	B 550500
	127.00	152.40	19.50	18.20	RUM201270-N8C0	B 600500
	130.00	140.00	8.00	7.40	RUM001300-N8C0	B 551511
	131.00	144.00	13.50	12.70	RUM001310-N8C0	B 566515
	133.35	158.75	14.00	12.60	RUM001333-N8C0	B 625525/1
	139.70	165.10	19.50	18.20	RUM001397-N8C0	B 650550
	140.00	155.00	13.00	12.00	RUM001400-N8C0	B 610551
	146.05	171.45	19.50	18.20	RUM101460-N8C0	B 675575
	152.40	177.80	19.50	18.20	RUM001524-N8C0	B 700600
	152.40	184.15	25.80	24.20	RUM101524-N8C0	B 725600
	155.00	170.00	9.50	8.55	RUM001550-N8C0	B 669610

Dimensions printed in **bold** type correspond to ISO/DIN 5597 and ISO 5597/1. * Split groove
Additional dimensions can be delivered on request.

Note	Rod Diameter	Groove Diameter	Groove Width	Seal Width	TSS Article No.	Description
	d_N h11	D_1 H11	L +0.1	B		
	158.75	190.50	25.80	24.20	RUM001587-N8C0	B 750625
	160.00	174.00	11.50	10.60	RUM001600-N8C0	B 685629
	163.00	178.00	13.00	12.00	RUM001630-N8C0	B 700641
	165.10	177.80	10.00	9.20	RUM001651-N8C0	B 700650
	165.10	196.85	25.80	24.20	RUM101651-N8C0	B 775650
	170.00	182.70	10.00	9.20	RUM001700-N8C0	B 719669
	171.45	203.20	25.80	24.20	RUM001714-N8C0	B 800675
	175.00	200.00	14.50	13.10	RUM001750-N8C0	B 787688
	177.80	203.20	22.70	21.40	RUM001778-N8C0	B 800700
	180.00	195.00	12.50	11.50	RUM001800-N8C0	B 767708
	184.15	215.90	25.80	24.20	RUM001841-N8C0	B 850725
	187.00	202.00	11.50	10.60	RUM001870-N8C0	B 795736
	188.00	203.00	13.00	12.00	RUM001880-N8C0	B 799740
	190.50	222.25	25.80	24.20	RUM001905-N8C0	B 875750
	196.00	208.70	9.50	8.70	RUM001960-N8C0	B 821771
	196.85	228.60	25.80	24.20	RUM001968-N8C0	B 900775
	203.20	235.00	25.80	24.20	RUM002032-N8C0	B 925800
	214.00	229.00	13.00	12.10	RUM002140-N8C0	B 901842
	215.90	247.65	25.80	24.20	RUM002159-N8C0	B 975850
	222.25	254.00	25.80	24.20	RUM002222-N8C0	B 1000875
	224.00	236.70	9.50	8.70	RUM002240-N8C0	B 931881
	228.60	260.35	25.80	24.20	RUM002286-N8C0	B 1025900
	238.00	258.00	15.50	14.40	RUM002380-N8C0	B 1015937
	240.00	255.00	13.00	12.00	RUM002400-N8C0	B 1003944
	241.30	273.05	25.80	24.20	RUM002413-N8C0	B 1075950
	250.00	290.00	25.40	23.30	RUM002500-N8C0	B 1141984
	254.00	285.75	25.80	24.20	RUM002540-N8C0	B 11251000
	260.35	292.10	25.80	24.20	RUM002603-N8C0	B 11501025
	266.70	298.45	25.80	24.20	RUM002667-N8C0	B 11751050
	273.05	304.80	25.80	24.20	RUM002730-N8C0	B 12001075
	279.40	311.15	25.80	24.20	RUM002794-N8C0	B 12251100
	280.00	320.00	22.50	20.30	RUM002800-N8C0	B 12591102
	285.75	317.50	25.80	24.20	RUM002857-N8C0	B 12501125
	298.45	330.20	25.80	24.20	RUM002984-N8C0	B 13001175
	304.80	336.55	25.80	24.20	RUM003048-N8C0	B 13251200
	318.00	355.00	13.00	11.90	RUM003180-N8C0	B 13191252

Dimensions printed in **bold** type correspond to ISO/DIN 5597 and ISO 5597/1. * Split groove
Additional dimensions can be delivered on request.

Note	Rod Diameter	Groove Diameter	Groove Width	Seal Width	TSS Article No.	Description
	d_N h11	D_1 H11	L +0.1	B		
	320.00	**360.00**	**25.50**	**23.30**	**RUM003200-N8C0**	**B 14171259**
	350.00	385.00	25.40	23.50	RUM003500-N8C0	B 15151377
	375.00	415.00	25.40	23.20	RUM003750-N8C0	B 16331476
	445.00	482.00	35.50	33.50	RUM004450-N8C0	B 19001750

Dimensions printed in **bold** type correspond to ISO/DIN 5597 and ISO 5597/1. * Split groove
Additional dimensions can be delivered on request.

■ Installation Recommendation

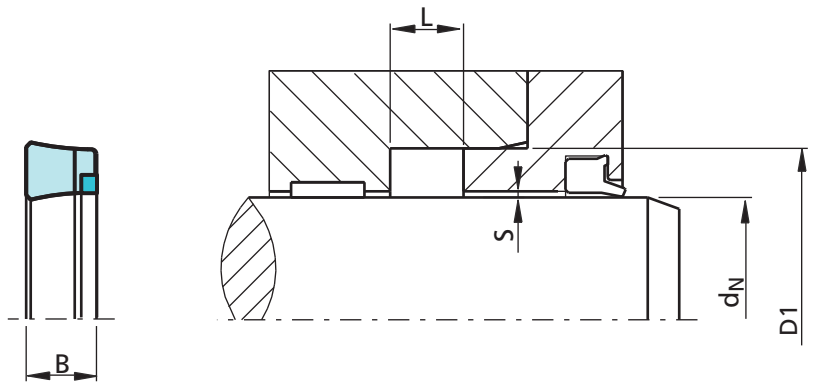

Figure 37 Installation drawing

Ordering example

Balsele Type B/NEI
Rod diameter: d_N = 20.0 mm
Groove diameter: D1 = 28.0 mm
Groove width L = 7.0 mm
TSS Part No.: RUM1E0200 -
Compound: N8CO (NBR + cotton fabric and POM Back-up Ring)

TSS Article No. RUM 1 E 0200 - N8CO

- TSS Series No.
- Design code
- Execution Mark
- Rod diameter x 10
- Quality Index (Standard)
- Material code (Seal ring)

Polypac Ref. No.: B 110078/NEI

Table XXX Installation dimensions / TSS Article No.

Note	Rod Diameter	Groove Diameter	Groove Width	Seal Width	TSS Article No.	Description
	d_N h11	D_1 H11	L +0.1	B		
*	12.00	23.00	7.50	6.80	RUM3E0120-N8C0	B090047/NEI
*	15.00	27.00	7.00	6.30	RUM1E0150-N8C0	B106059/NEI
*	16.00	24.00	7.00	6.50	RUM1E0160-N8C0	B094063/NEI
*	16.00	28.00	7.50	6.90	RUM2E0160-N8C0	B110062/NEI
*****	**18.00**	**28.00**	**6.30**	**5.70**	**RUM4E0180-N8C0**	**B110070/NEI**
*	18.00	30.00	7.50	6.90	RUM5E0180-N8C0	B118070/NEI
*****	**20.00**	**28.00**	**6.30**	**5.70**	**RUM2E0200-N8C0**	**B110078/1/NEI**
*	20.00	28.00	7.00	6.50	RUM1E0200-N8C0	B110078/NEI
*	20.00	30.00	8.50	7.60	RUM3E0200-N8C0	B118078/NEI

Dimensions printed in **bold** type correspond to ISO/DIN 5597 and ISO 5597/1. * Split groove
Additional dimensions can be delivered on request.

POLYPAC® - Balsele with Back-up Ring

Note	Rod Diameter	Groove Diameter	Groove Width	Seal Width	TSS Article No.	Description
	d_N h11	D_1 H11	L +0.1	B		
*	22.00	30.00	7.00	6.50	RUM1E0220-N8C0	B118086/NEI
*	22.00	32.00	10.00	9.00	RUM2E0220-N8C0	B125086/NEI
*	22.00	34.00	9.50	8.90	RUM3E0220-N8C0	B133086/NEI
*	22.00	35.00	10.00	9.20	RUM4E0220-N8C0	B137086/NEI
*	**25.00**	**33.00**	**6.40**	**5.80**	**RUM0E0250-N8C0**	**B129098/1/NEI**
*	25.00	35.00	9.00	8.40	RUM1E0250-N8C0	B137098/NEI
*	25.00	38.00	10.00	9.15	RUM2E0250-N8C0	B149098/NEI
*	25.40	38.10	10.00	9.20	RUM2E0254-N8C0	B150100/NEI
*	28.00	36.00	6.40	5.80	RUM0E0280-N8C0	B141110/NEI
*	**28.00**	**38.00**	**8.00**	**7.40**	**RUM1E0280-N8C0**	**B149110/1/NEI**
*	28.00	40.00	9.50	8.90	RUM2E0280-N8C0	B157110/NEI
*	28.00	41.00	10.00	9.30	RUM3E0280-N8C0	B161110/NEI
*	28.57	39.68	9.25	8.50	RUM0E0285-N8C0	B156112/NEI
*	30.00	38.00	6.40	5.80	RUM0E0300-N8C0	B149118/NEI
*	30.00	40.00	7.50	6.80	RUM3E0300-N8C0	B157118/NEI
*	30.00	40.00	10.50	9.80	RUM4E0300-N8C0	B157118/1/NEI
*	30.00	45.00	9.00	8.50	RUM6E0300-N8C0	B177118/1/NEI
*	30.00	50.00	14.50	13.50	RUM7E0300-N8C0	B196118/NEI
*	31.75	47.62	11.60	10.60	RUM2E0317-N8C0	B187125/NEI
*	32.00	40.00	6.30	5.80	RUM0E0320-N8C0	B157125/1/NEI
*	32.00	40.00	9.00	8.50	RUM1E0320-N8C0	B157125/NEI
*	32.00	42.00	8.50	7.80	RUM2E0320-N8C0	B165125/1/NEI
*	32.00	42.00	11.00	10.30	RUM3E0320-N8C0	B165125/NEI
*	32.00	45.00	10.00	9.50	RUM4E0320-N8C0	B177125/NEI
*	34.92	50.80	8.50	7.50	RUM0E0349-N8C0	B200137/4/NEI
*	34.92	50.80	11.60	10.60	RUM2E0349-N8C0	B200137/2/NEI
	35.00	43.00	6.50	6.00	RUM0E0350-N8C0	B169137/NEI
*	35.00	45.00	10.50	9.80	RUM2E0350-N8C0	B177137/3/NEI
*	35.00	50.00	11.50	10.60	RUM4E0350-N8C0	B196137/NEI
	36.00	43.00	6.50	6.00	RUM0E0360-N8C0	B169141/NEI
	36.00	44.00	6.40	5.90	RUM1E0360-N8C0	B173141/NEI
*	36.00	46.00	8.50	7.80	RUM2E0360-N8C0	B181141/NEI
*	36.00	48.00	9.50	8.70	RUM3E0360-N8C0	B188141/NEI
*	36.00	48.00	12.00	11.20	RUM4E0360-N8C0	B188141/1/NEI
*	38.10	50.80	10.00	9.22	RUM2E0381-N8C0	B200150/NEI
*	38.10	53.97	10.50	9.50	RUM3E0381-N8C0	B212150/5/NEI

Dimensions printed in **bold** type correspond to ISO/DIN 5597 and ISO 5597/1. * Split groove
Additional dimensions can be delivered on request.

POLYPAC® - Balsele with Back-up Ring

Note	Rod Diameter	Groove Diameter	Groove Width	Seal Width	TSS Article No.	Description
	d_N h11	D_1 H11	L +0.1	B		
	40.00	48.00	6.50	6.00	RUM0E0400-N8C0	B188157/NEI
*	**40.00**	**50.00**	**8.00**	**7.40**	**RUM1E0400-N8C0**	**B196157/3/NEI**
*	40.00	50.00	10.50	9.80	RUM2E0400-N8C0	B196157/1/NEI
*	40.00	50.00	11.00	10.30	RUM3E0400-N8C0	B196157/NEI
*	**40.00**	**55.00**	**8.00**	**7.00**	**RUM5E0400-N8C0**	**B216157/NEI**
*	40.00	55.00	11.00	10.10	RUM6E0400-N8C0	B216157/1/NEI
*	40.00	60.00	14.50	13.30	RUM7E0400-N8C0	B236157/NEI
*	42.00	52.00	9.00	8.40	RUM1E0420-N8C0	B204165/NEI
	44.45	53.97	7.62	7.00	RUM0E0444-N8C0	B212175/1/NEI
*	44.45	60.32	11.60	10.70	RUM1E0444-N8C0	B237175/NEI
	45.00	**55.00**	**8.00**	**7.30**	**RUM1E0450-N8C0**	**B216177/NEI**
	45.00	55.00	11.00	10.00	RUM2E0450-N8C0	B216177/1/NEI
*	45.00	57.00	10.00	9.00	RUM3E0450-N8C0	B224177/NEI
*	45.00	60.00	10.50	9.60	RUM4E0450-N8C0	B236177/NEI
*	45.00	65.00	14.50	13.30	RUM6E0450-N8C0	B255177/NEI
	50.00	**60.00**	**8.00**	**7.30**	**RUM1E0500-N8C0**	**B236196/NEI**
	50.00	60.00	10.00	9.30	RUM2E0500-N8C0	B236196/1/NEI
*	50.00	62.00	9.50	8.50	RUM3E0500-N8C0	B244196/1/NEI
	50.00	65.00	11.00	10.10	RUM5E0500-N8C0	B255196/NEI
*	50.00	70.00	14.50	13.30	RUM6E0500-N8C0	B275196/NEI
*	54.00	66.00	9.50	8.70	RUM0E0540-N8C0	B259212/NEI
	55.00	65.00	8.00	7.30	RUM0E0550-N8C0	B255216/1/NEI
	55.00	65.00	11.00	10.30	RUM1E0550-N8C0	B255216/NEI
*	55.00	70.00	10.50	9.60	RUM2E0550-N8C0	B275216/NEI
*	55.00	75.00	14.50	13.30	RUM3E0550-N8C0	B295216/NEI
*	56.00	71.00	10.50	9.60	RUM1E0560-N8C0	B279220/NEI
*	56.00	76.00	14.50	13.40	RUM2E0560-N8C0	B299220/NEI
	57.15	69.85	10.00	9.20	RUM0E0571-N8C0	B275225/NEI
	60.00	69.50	7.00	6.40	RUM0E0600-N8C0	B273236/NEI
	60.00	70.00	8.00	6.40	RUM1E0600-N8C0	B275236/NEI
	60.00	70.00	11.00	10.30	RUM2E0600-N8C0	B275236/1/NEI
	60.00	70.00	13.00	12.25	RUM3E0600-N8C0	B275236/2/NEI
	60.00	72.00	10.00	9.20	RUM5E0600-N8C0	B283236/NEI
*	60.00	75.00	13.00	12.10	RUM6E0600-N8C0	B295236/NEI
*	60.00	80.00	14.50	13.50	RUM7E0600-N8C0	B314236/NEI
	63.00	75.00	11.00	10.20	RUM1E0630-N8C0	B295248/NEI

Dimensions printed in **bold** type correspond to ISO/DIN 5597 and ISO 5597/1. * Split groove
Additional dimensions can be delivered on request.

POLYPAC® - Balsele with Back-up Ring

Note	Rod Diameter	Groove Diameter	Groove Width	Seal Width	TSS Article No.	Description
	d_N h11	D_1 H11	L +0.1	B		
*	**63.00**	**78.00**	**12.50**	**11.50**	**RUM2E0630-N8C0**	**B307248/NEI**
*	63.00	83.00	14.50	13.30	RUM3E0630-N8C0	B326248/NEI
	63.50	76.20	8.50	7.70	RUM0E0635-N8C0	B300250/NEI
*	63.50	77.78	11.50	10.70	RUM1E0635-N8C0	B306250/NEI
	65.00	75.00	13.50	12.30	RUM1E0650-N8C0	B295255/NEI
	65.00	77.00	9.60	8.80	RUM2E0650-N8C0	B303255/NEI
*	65.00	80.00	11.50	10.60	RUM3E0650-N8C0	B314255/NEI
*	65.00	80.00	12.50	11.50	RUM4E0650-N8C0	B314255/2/NEI
	70.00	80.00	8.00	7.30	RUM0E0700-N8C0	B314275/1/NEI
	70.00	80.00	13.00	12.30	RUM2E0700-N8C0	B314275/NEI
	70.00	82.00	10.50	9.70	RUM4E0700-N8C0	B322275/NEI
	70.00	84.00	12.50	11.20	RUM5E0700-N8C0	B330275/NEI
*	70.00	85.00	12.00	11.00	RUM6E0700-N8C0	B334275/1/NEI
*	**70.00**	**85.00**	**12.50**	**11.50**	**RUM7E0700-N8C0**	**B334275/NEI**
*	70.00	90.00	14.50	13.50	RUM8E0700-N8C0	B354275/NEI
*	72.00	87.00	11.00	10.00	RUM0E0720-N8C0	B342283/NEI
	75.00	85.00	11.00	10.30	RUM1E0750-N8C0	B334295/2/NEI
	75.00	90.00	11.50	10.60	RUM3E0750-N8C0	B354295/NEI
	75.00	90.00	12.80	11.80	RUM4E0750-N8C0	B354295/1/NEI
*	75.00	95.00	14.50	13.50	RUM6E0750-N8C0	B374295/NEI
	80.00	93.00	14.50	13.50	RUM2E0800-N8C0	B366314/NEI
	80.00	95.00	12.00	11.10	RUM3E0800-N8C0	B374314/NEI
	80.00	96.00	10.50	9.60	RUM4E0800-N8C0	B377314/NEI
*	80.00	100.00	12.00	10.80	RUM5E0800-N8C0	B393314/1/NEI
*	80.00	100.00	14.50	13.40	RUM6E0800-N8C0	B393314/NEI
	85.00	95.00	8.00	7.30	RUM0E0850-N8C0	B374334/NEI
	85.00	97.00	9.60	9.00	RUM2E0850-N8C0	B381334/NEI
	85.00	100.00	12.00	10.80	RUM3E0850-N8C0	B393334/1/NEI
*	85.00	105.00	14.50	13.40	RUM4E0850-N8C0	B413334/NEI
*	88.90	114.30	19.50	18.20	RUM2E0889-N8C0	B450350/2/NEI
	90.00	**105.00**	**9.50**	**8.70**	**RUM2E0900-N8C0**	**B413354/NEI**
	90.00	**105.00**	**12.50**	**11.60**	**RUM3E0900-N8C0**	**B413354/1/NEI**
	90.00	106.20	10.80	9.80	RUM4E0900-N8C0	B418354/NEI
*	**90.00**	**110.00**	**12.50**	**11.40**	**RUM5E0900-N8C0**	**B433354/NEI**
*	92.07	111.12	12.50	11.30	RUM0E0920-N8C0	B437362/NEI
	95.00	105.00	11.00	10.30	RUM0E0950-N8C0	B413374/NEI

Dimensions printed in **bold** type correspond to ISO/DIN 5597 and ISO 5597/1. * Split groove
Additional dimensions can be delivered on request.

POLYPAC® - Balsele with Back-up Ring

Note	Rod Diameter	Groove Diameter	Groove Width	Seal Width	TSS Article No.	Description
	d_N h11	D_1 H11	L +0.1	B		
	95.00	112.00	12.00	11.10	RUM3E0950-N8C0	B441374/NEI
*	95.00	115.00	14.50	13.30	RUM4E0950-N8C0	B452374/NEI
	100.00	113.00	13.50	12.70	RUM0E1000-N8C0	B444393/NEI
	100.00	115.00	11.50	10.60	RUM1E1000-N8C0	B452393/1/NEI
	100.00	115.00	12.50	11.50	RUM2E1000-N8C0	B452393/NEI
	100.00	120.00	12.00	11.20	RUM3E1000-N8C0	B472393/1/NEI
	100.00	120.00	14.50	13.40	RUM4E1000-N8C0	B472393/NEI
	105.00	115.00	11.00	10.00	RUM0E1050-N8C0	B452413/NEI
	105.00	125.00	12.50	11.40	RUM3E1050-N8C0	B492413/NEI
	110.00	125.00	12.00	11.20	RUM0E1100-N8C0	B492433/NEI
	110.00	**130.00**	**12.50**	**11.40**	**RUM1E1100-N8C0**	**B511433/NEI**
	110.00	135.00	15.50	14.20	RUM2E1100-N8C0	B531433/NEI
	120.00	132.70	10.00	9.20	RUM1E1200-N8C0	B522472/NEI
	120.00	135.00	12.50	11.60	RUM2E1200-N8C0	B531472/NEI
	120.00	140.00	12.50	11.40	RUM3E1200-N8C0	B551472/NEI
	120.00	145.00	18.80	17.50	RUM4E1200-N8C0	B570472/NEI
	125.00	150.00	14.50	13.10	RUM2E1250-N8C0	B590492/NEI
	130.00	145.00	13.00	12.00	RUM2E1300-N8C0	B570511/1/NEI
	130.00	145.00	15.00	14.00	RUM3E1300-N8C0	B570511/NEI
	130.00	150.00	16.00	14.80	RUM4E1300-N8C0	B590511/NEI
	133.35	158.75	14.00	12.60	RUM0E1333-N8C0	B625525/1/NEI
	135.00	150.00	14.00	13.00	RUM0E1350-N8C0	B590531/1/NEI
	135.00	155.00	16.00	14.80	RUM1E1350-N8C0	B610531/NEI
	135.00	160.00	14.00	12.70	RUM2E1350-N8C0	B629531/NEI
	140.00	155.00	13.00	12.00	RUM0E1400-N8C0	B610551/NEI
	140.00	**160.00**	**12.50**	**11.40**	**RUM1E1400-N8C0**	**B629551/NEI**
	140.00	160.00	14.50	13.40	RUM2E1400-N8C0	B629551/1/NEI
	140.00	170.00	22.80	21.20	RUM3E1400-N8C0	B669551/NEI
	145.00	157.70	10.00	9.20	RUM0E1450-N8C0	B620570/NEI
	150.00	170.00	14.50	13.40	RUM1E1500-N8C0	B669590/1/NEI
	160.00	175.00	16.00	15.50	RUM1E1600-N8C0	B688629/NEI
	160.00	180.00	14.50	13.30	RUM2E1600-N8C0	B708629/NEI
	165.00	184.00	16.00	14.80	RUM0E1650-N8C0	B728649/NEI
	165.00	195.00	20.40	18.70	RUM1E1650-N8C0	B767649/NEI
	175.00	200.00	23.00	21.55	RUM1E1750-N8C0	B787688/1/NEI
	180.00	200.00	14.50	13.30	RUM1E1800-N8C0	B787708/NEI

Dimensions printed in **bold** type correspond to ISO/DIN 5597 and ISO 5597/1. * Split groove
Additional dimensions can be delivered on request.

Note	Rod Diameter	Groove Diameter	Groove Width	Seal Width	TSS Article No.	Description
	d_N h11	D_1 H11	L +0.1	B		
	180.00	210.00	20.50	18.90	RUM2E1800-N8C0	B826708/1/NEI
	190.00	210.00	14.50	13.40	RUM0E1900-N8C0	B826748/NEI
	198.00	208.00	12.00	11.30	RUM0E1980-N8C0	B819779/NEI
	200.00	220.00	14.50	13.30	RUM0E2000-N8C0	B866787/NEI
	210.00	230.00	14.50	13.30	RUM0E2100-N8C0	B905826/NEI
	210.00	240.00	22.50	21.00	RUM1E2100-N8C0	B944826/NEI
	220.00	250.00	20.50	18.90	RUM0E2200-N8C0	B984866/NEI
	230.00	260.00	20.50	19.00	RUM0E2300-N8C0	B1023905/NEI
	500.00	540.00	35.00	32.80	RUM0E5000-N8C0	B21261968/NEI
	530.00	570.00	25.00	23.00	RUM0E5300-N8C0	B22442086/NEI
	640.00	680.00	25.00	23.00	RUM0E6400-N8C0	B26772519/NEI
	702.00	752.40	30.00	27.50	RUM0E7020-N8C0	B29612764/NEI
	760.00	820.00	35.00	32.00	RUM0E7600-N8C0	B32282992/NEI
	785.00	845.00	35.00	32.00	RUM0E7850-N8C0	B33273090/NEI
	845.00	905.00	35.00	32.00	RUM0E8450-N8C0	B35633327/NEI
	921.00	981.00	35.00	32.00	RUM0E9210-N8C0	B38623626/NEI
	1040.00	1110.00	35.00	32.00	RUM0X1040-N8C0	B43704094/NEI
	1195.00	1265.00	35.00	32.00	RUM0X1195-N8C0	B49804705/NEI

Dimensions printed in **bold** type correspond to ISO/DIN 5597 and ISO 5597/1. * Split groove
Additional dimensions can be delivered on request.

Zurcon® L-Cup®

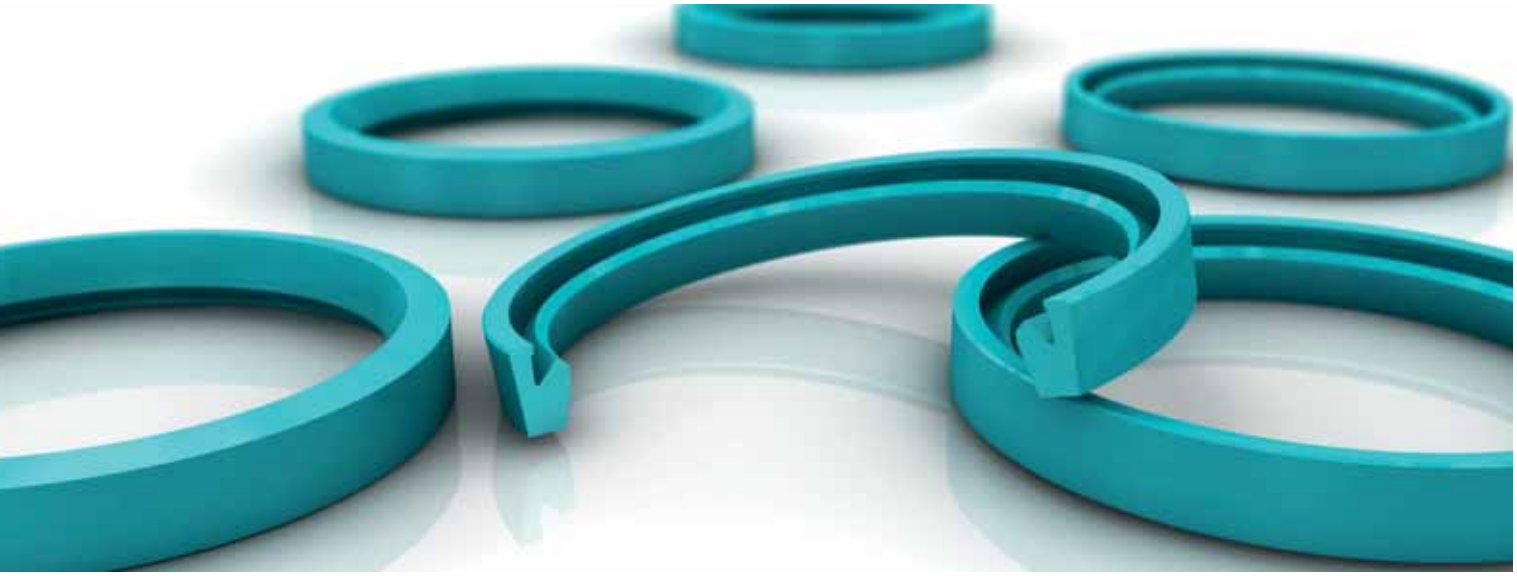

Single Acting

Low Friction Properties

Material:
Zurcon®

■ Zurcon® L-Cup®

Introduction

The rod sealing system is the most critical part of a hydraulic cylinder. Therefore it is expected that a rod sealing system performs under leak-free conditions in the static and dynamic state. Moreover it has to fulfil the lifetime of several thousand hours.

To meet these requirements, Trelleborg Sealing Solutions has developed the Zurcon® L-Cup®*, a highly effective and innovative rod sealing component.

***Patent for: Europe No. EP 0724693**
***Patent for: US No. 5,649,711**
***Patent for: China No. ZL 94193869.7**
Zurcon® L-Cup® is a trade name.

Description

Zurcon® L-Cup® is a single acting polyurethane rod seal with a unique design offering a hydrodynamic backpumping ability over the complete working pressure range. The pressure-independent, hydrodynamic sealing ability of this new sealing element requires no lubrication reservoir in the sealing area and ensures a constant and controlled pressure distribution over a wide pressure range.

The advantages of the Zurcon® L-Cup® design lead to the following improved properties:

Advantages

- Hydrodynamic back-pumping ability over the complete working pressure range
- Low friction and therefore a reduction of heat generated
- Low breakout force even after a long period of non-operation
- Very low stick-slip
- Low increase in friction at increasing pressure
- High extrusion resistance
- Optimum geometry of the static sealing lip for higher sealing ability
- No entrapped oil and grease between seal and groove (due to notches)
- No pressure build-up between seal and groove OD
- Long service life

The Zurcon® L-Cup® was designed in accordance with customers' demands.

- Groove dimensions according to ISO 5597 Part 2
- Interchangeable with existing U-Cup grooves
- Installation into closed grooves
- Wear and extrusion resistant high-performance polyurethane

Application Examples

Zurcon® L-Cup® can be used in all applications in which previously a conventional U-Cup was applied, such as:

- Fork lifts
- Agricultural machines
- Light and medium mobile hydraulics
- Industrial hydraulics
- Machine tools
- Injection moulding machines
- hydraulic presses.

Another preferred solution for tandem rod sealing systems is the combination with the Turcon® Stepseal® 2K as primary seal and L-Cup® as secondary seal, in conjunction with a double acting scraper.

Technical Data

Operating conditions

Pressure:	Up to 40 MPa
Velocity:	Up to 0.5 m/s
Temperature:	-35 °C to +110 °C
Media:	Hydraulic fluids based on mineral oil

Important Note:
The above data are maximum values and cannot be used at the same time. e.g. the maximum operating speed depends on material type, pressure, temperature and gap value.
Temperature range also dependent on medium.

Materials

Zurcon® Z20

Special polyurethane	93 Shore A
Colour:	turquoise

Method of Operation

Trelleborg Sealing Solutions' experience in the production of hydrodynamic back-pumping seals such as Turcon® Stepseal® 2K, and the use of Finite Element Analysis (FEA) and other laboratory tests have led to the development of Zurcon® L-Cup®. The main objective in the development of this seal was the ability to achieve an optimum pressure distribution over the complete pressure range.

The pressure distribution curve under the sealing lip needs to have a steep gradient on the high-pressure side and a shallow gradient on the rear of the seal.

The operating principles and function of Zurcon® L-Cup® is similar to the well-known Turcon® Stepseal® 2K.

Friction

In Figure 38 the friction values of a conventional U-Cup and of Zurcon® L-Cup® are being compared. A high increase in friction of the U-Cup is clearly shown between approximately 5 and 15 MPa. This is due to the U-Cup being totally pressed on the rod surface at increased pressure, causing elimination of the oil reservoir and dry running of the U-Cup.

In comparison, the L-Cup® shows only a low increase in friction which is due to the smaller contact area and better tribological behaviour. The result is a low friction heat generation.

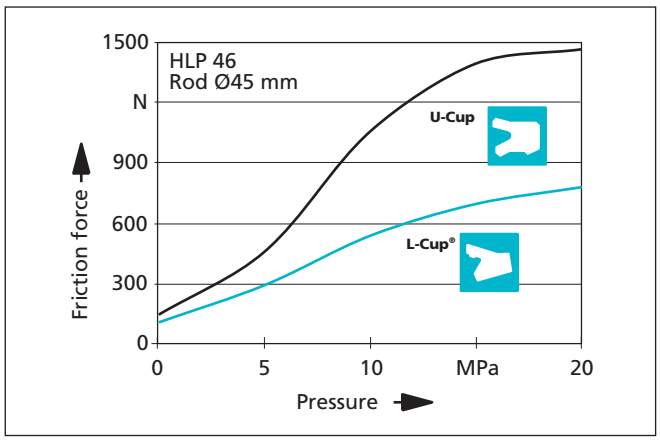

Figure 38 Friction dependent on pressure

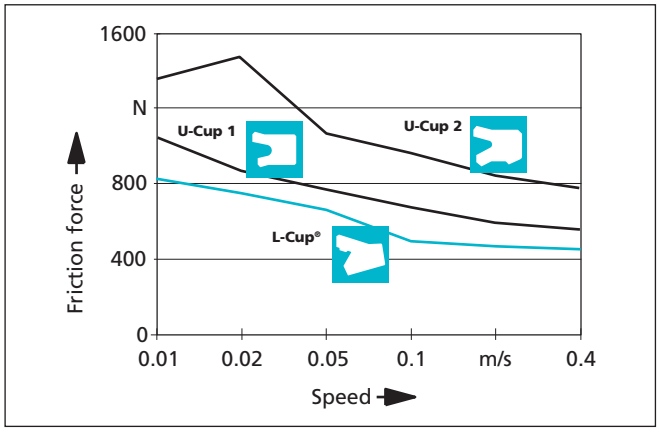

Figure 39 Friction dependent on speed

Friction Heat

The effect described above can be made visible by simply measuring the temperature. Figure 40 shows the increase in temperature on the rod surface caused by friction, measured at a pressure of 40 MPa after 20 000 cycles. This explains the prolonged service life of L-Cup®.

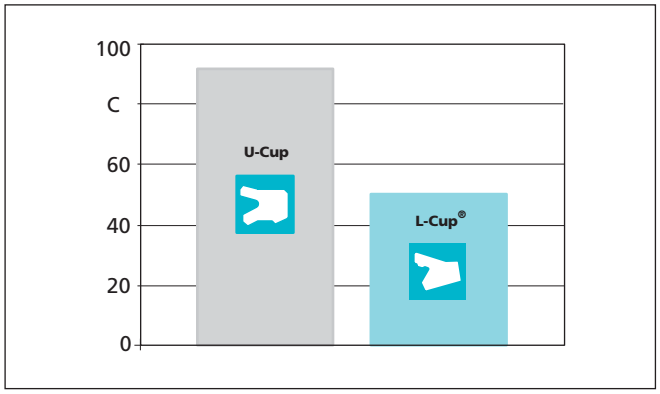

Figure 40 Increase in temperature caused by friction

Test Conditions (Figure 40)

Dimension:	50 x 60 x 11 mm
Pressure:	0/40 MPa
Velocity:	0.1 m/s
Temperature:	ambient

Sealing Gap

The recommended gap dimensions described in Figure 41, depend on pressure and temperature.

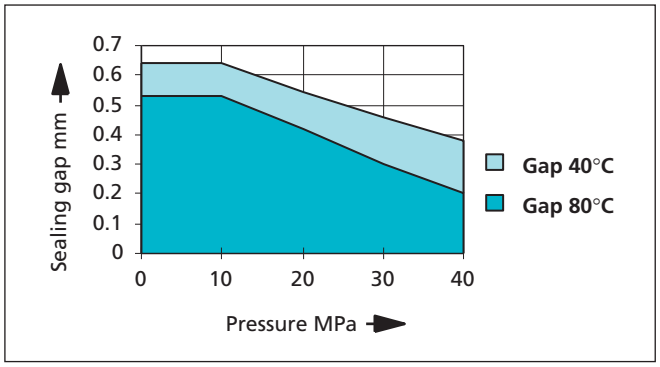

Figure 41 Sealing gap

Design Instructions

Lead-in chamfers

In order to avoid damage to the rod seal during installation, lead-in chamfers and rounded edges must be provided on the piston rods (Figure 42). If this is not possible for design reasons, a separate installation tool must be used.

The minimum length of the lead-in chamfer depends on the profile size of the seal and can be seen from the following tables.

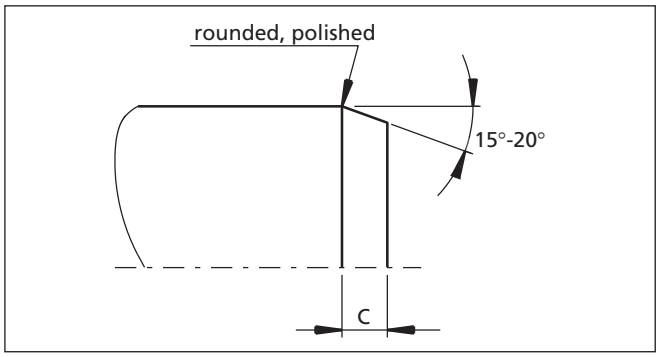

Figure 42 Lead-in chamfer

Lead-in Chamfer Length C min.	Zurcon® L-Cup® Groove Depth*
2.0	3.5
2.0	4.0
2.5	5.0
4.0	7.5
5.0	10.0
6.5	12.5
7.5	15.0

* The groove depth is calculated from: $(D - d_N)/2$.
The dimensions for D and d_N can be found in the Table XXXI.

■ Installation Recommendation

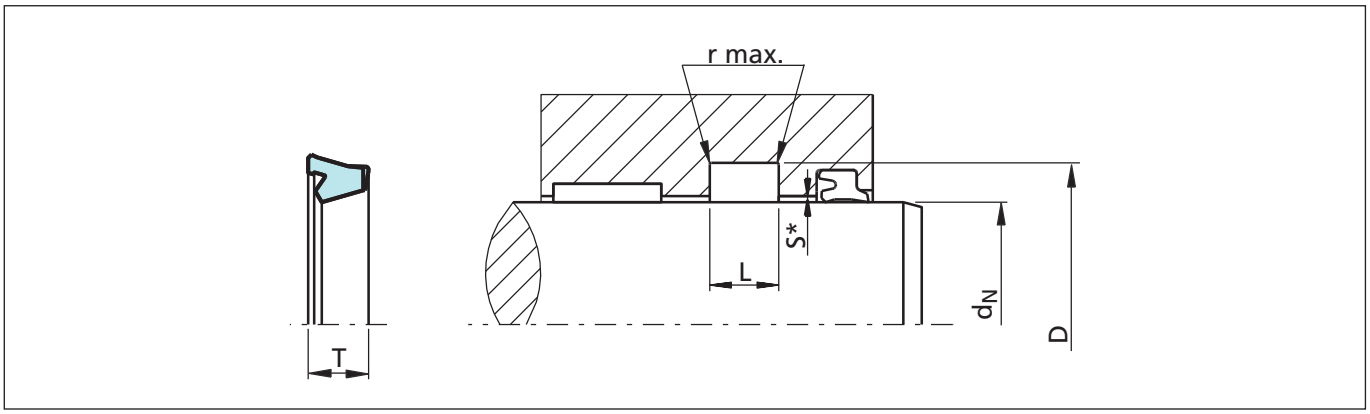

Figure 43 Installation drawing
* Gap measure "S" see Figure 41

Table XXXI Installation dimensions / TSS Article No.

Rod Dia.	Groove Dia.	Groove Width	Ra-dius	Ring Width	TSS Article No.
d_N f8	D H10	L +0.25	r max	T	
***10**	**18**	**6.3**	**0.3**	**5.7**	**RLS100100-Z20**
***12**	**20**	**6.3**	**0.3**	**5.7**	**RLS100120-Z20**
***14**	**22**	**6.3**	**0.3**	**5.7**	**RLS100140-Z20**
16	22	**6.0**	**0.3**	**5.4**	RL38N0160-Z20
***18**	**26**	**6.3**	**0.3**	**5.7**	**RLS100180**-Z20
20	26	5.5	0.3	5.0	RL04N0200-Z20
***20**	**28**	**6.3**	**0.3**	**5.7**	**RL08N0200-Z20**
***22**	**30**	**6.3**	**0.3**	**5.7**	**RL08N0220-Z20**
25	**33**	**8.0**	**0.3**	**7.2**	**RL10N0250-Z20**
25	**33**	**6.3**	**0.3**	**5.7**	**RL08N0250-Z20**
28	**36**	**6.3**	**0.5**	**5.7**	**RL08N0280-Z20**
***28**	**38**	**8.0**	**0.3**	**7.2**	**RL14N0280-Z20**
30	38	6.3	0.3	5.7	RL08N0300-Z20
30	40	8.0	0.3	7.2	RL14N0300-Z20
30	38	8.0	0.3	7.2	RL10N0300-Z20
30	40	11.0	0.3	9.9	RL17N0300-Z20
32	**42**	**8.0**	**0.3**	**7.2**	**RL14N0320-Z20**
35	43	6.3	0.3	5.7	RL08N0350-Z20
35	45	11.0	0.3	9.9	RL17N0350-Z20
36	**44**	**6.3**	**0.5**	**5.7**	**RL08N0360-Z20**
36	**46**	**8.0**	**0.3**	**7.2**	**RL14N0360-Z20**

* Split groove
Dimensions and TSS Article Numbers in bold according to ISO 5597, Edition 2 tables 4 and 5.

Rod Dia.	Groove Dia.	Groove Width	Ra-dius	Ring Width	TSS Article No.
d_N f8	D H10	L +0.25	r max	T	
36	46	10.0	0.3	9.0	RL16N0360-Z20
38	48	11.0	0.3	9.9	RL17N0380-Z20
40	48	7.0	0.3	6.3	RL09N0400-Z20
40	**50**	**8.0**	**0.3**	**7.2**	**RL14N0400-Z20**
40	50	10.0	0.3	9.0	RL16N0400-Z20
42	52	8.0	0.3	7.2	RL14N0420-Z20
42	52	10.0	0.3	9.0	RL16N0420-Z20
45	53	8.0	0.3	7.2	RL10N0450-Z20
45	**55**	**8.0**	**0.3**	**7.2**	**RL14N0450-Z20**
48	60	11.0	0.3	9.9	RL36N0480-Z20
50	58	9.0	0.3	8.1	RL11N0500-Z20
50	**60**	**8.0**	**0.3**	**7.2**	**RL14N0500-Z20**
50	60	10.0	0.3	9.0	RL16N0500-Z20
50	**65**	**12.5**	**0.4**	**11.3**	**RL26N0500-Z20**
55	63	9.0	0.3	8.1	RL11N0550-Z20
55	65	10.0	0.3	9.0	RL16N0550-Z20
***56**	**71**	**12.5**	**0.4**	**11.3**	**RL26N0560-Z20**
60	68	9.0	0.3	8.1	RL11N0600-Z20
60	70	8.0	0.3	7.2	RL14N0600-Z20
60	70	10.0	0.3	9.0	RL16N0600-Z20
63	**78**	**12.5**	**0.4**	**11.3**	**RL26N0630-Z20**
65	75	10.0	0.3	9.0	RL16N0650-Z20
70	80	10.0	0.3	9.0	RL16N0700-Z20
70	**85**	**12.5**	**0.4**	**11.3**	**RL26N0700-Z20**
75	90	12.5	0.3	11.3	RL26N0750-Z20
80	**95**	**12.5**	**0.4**	**11.3**	**RL26N0800-Z20**
85	100	13.1	0.4	11.8	RL27N0850-Z20
90	**105**	**12.5**	**0.4**	**11.3**	**RL26N0900-Z20**
100	**120**	**16.0**	**0.6**	**14.4**	**RL30N1000-Z20**
110	**130**	**16.0**	**0.6**	**14.4**	**RL30N1100-Z20**
115	135	16.0	0.6	14.4	RL30N1150-Z20
119	134	9.4	0.4	8.1	RL22N1190-Z20
120	135	12.5	0.4	11.3	RL26N1200-Z20
120	140	16.0	0.6	14.4	RL30N1200-Z20
125	140	12.0	0.4	10.8	RL25N1250-Z20
125	**145**	**16.0**	**0.6**	**14.4**	**RL30N1250-Z20**

* Split groove
Dimensions and TSS Article Numbers in bold according to ISO 5597, Edition 2 tables 4 and 5.

Rod Dia.	Groove Dia.	Groove Width	Ra-dius	Ring Width	TSS Article No.
d_N f8	D H10	L +0.25	r max	T	
130	150	16.0	0.6	14.4	RL30N1300-Z20
135	155	16.0	0.6	14.4	RL30N1350-Z20
140	**160**	**16.0**	**0.6**	**14.4**	**RL30N1400-Z20**
150	170	16.0	0.6	14.4	RL30N1500-Z20
155	175	16.0	0.6	14.4	RL30N1550-Z20
160	180	16.0	0.6	14.4	RL30N1600-Z20
195	220	20.0	0.6	18.0	RL32N1950-Z20

* Split groove
Dimensions and TSS Article Numbers in bold according to ISO 5597, Edition 2 tables 4 and 5.

Zurcon® U-Cup RU2

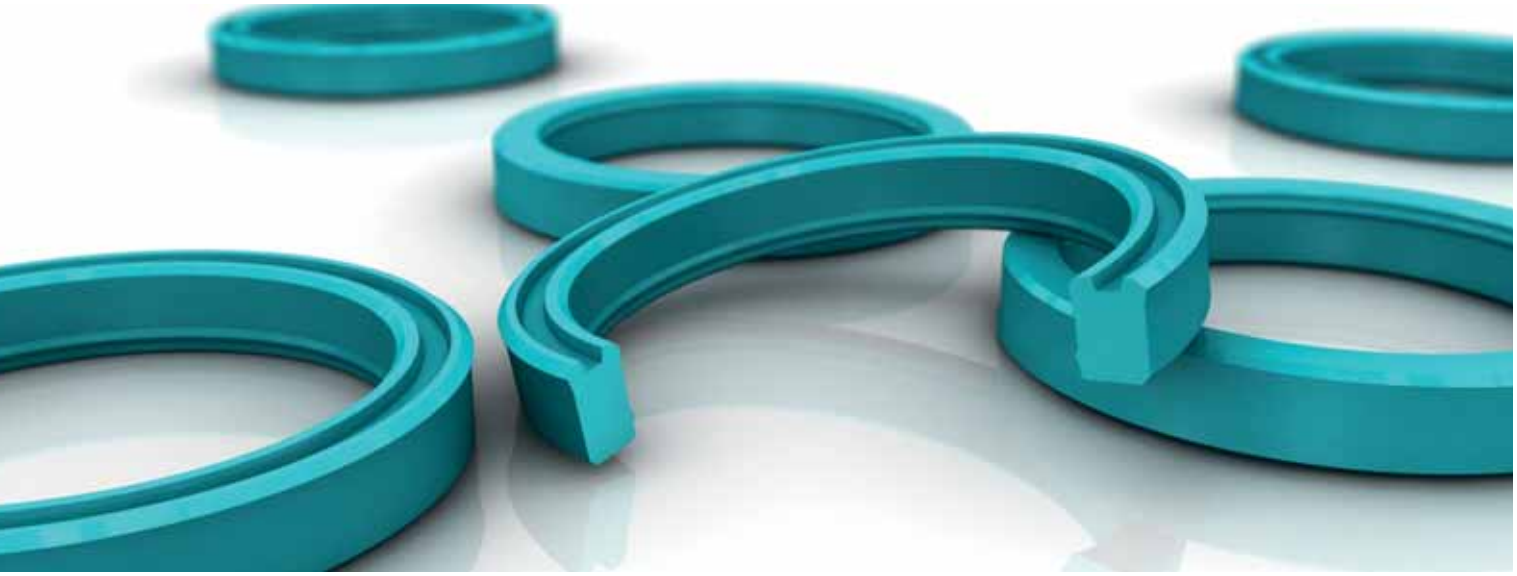

Single Acting U-Cup

Asymmetric, Double Lip, Compact

Material:
Zurcon®

■ U-Cup RU2

Description

Today U-Cups are used primarily as seals for piston rods in hydraulic cylinders. U-Cups in polyurethane are proven elements, due to their good mechanical properties, for standard cylinder construction, particularly for mobile hydraulics under rough operating conditions.

The U-Cup RU2 is a double lip seal in a compact design.

Type RU2

The compact U-Cup type RU2 is designed for small grooves. It is thus particularly suitable for use in space-saving designs. The compact form provides a high sealing effect even with low system pressures.

The U-Cup has two sealing lips in the dynamic sealing zone. The compact form with two sealing lips provides an improvement in the leakage behaviour at low system pressures. Due to the incorporation of an oil trap between the two sealing lips, friction at pressures above approx. 10 MPa is reduced. Furthermore, the second sealing lip prevents the entry of dirt from the atmosphere side.

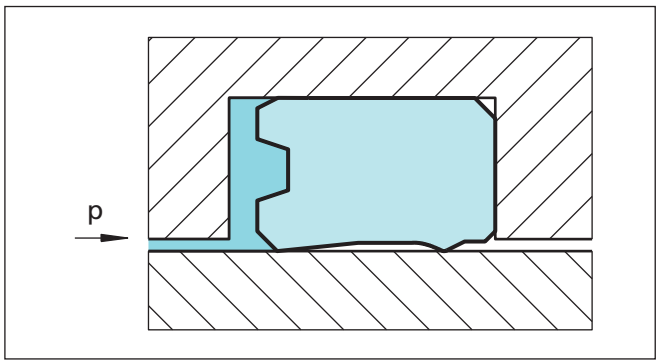

Figure 44 U-Cup, type RU2

Method of Operation

The sealing effect of the U-Cup comes from the intrinsic preload of the seal body and from the compression of the seal lips during installation. In operating condition, the radial mechanical contact forces are superimposed by the system pressure.

At low stroke speeds, U-Cups can tend to have a stick-slip effect due to an inadequate lubrication film formation in the seal clearance and to their material properties. This behaviour corresponds to the Stribeck curve described in the relevant literature.

Advantages

- Good sealing effect at high and low pressures
- Good abrasion resistance, wear-resistant
- Unaffected by sudden loads
- Suitable for small grooves
- Simple installation.

Technical Data

Operating pressure:	Max. 40 MPa
Speed:	Up to 0.5 m/s
Temperature:	Use in mineral oils: -35 °C to + 110 °C
Media:	Mineral oil-based hydraulic fluids.

Important Note:
The above data are maximum values and cannot be used at the same time. e.g. the maximum operating speed depends on material type, pressure, temperature and gap value.
Temperature range also dependent on medium.

Material

Standard Zurcon®:	Z20
Special Polyurethane:	93 Shore A
Colour:	turquoise

Seal clearance

Guide values for the radial clearance between rod and gland in relation to the operating pressure and rod diameter can be found in the table below.

Operating max. Pressure MPa	Radial Clearance S max.	
	d_N <60 mm	d_N >60mm
5	0.40	0.50
10	0.30	0.40
20	0.20	0.30
30	0.15	0.20
40	0.10	0.15

The values for S max. given in this table apply to all types for the low-pressure side of the U-Cup. They are designed for an operating temperature of 60 °C.

■ Installation Recommendation

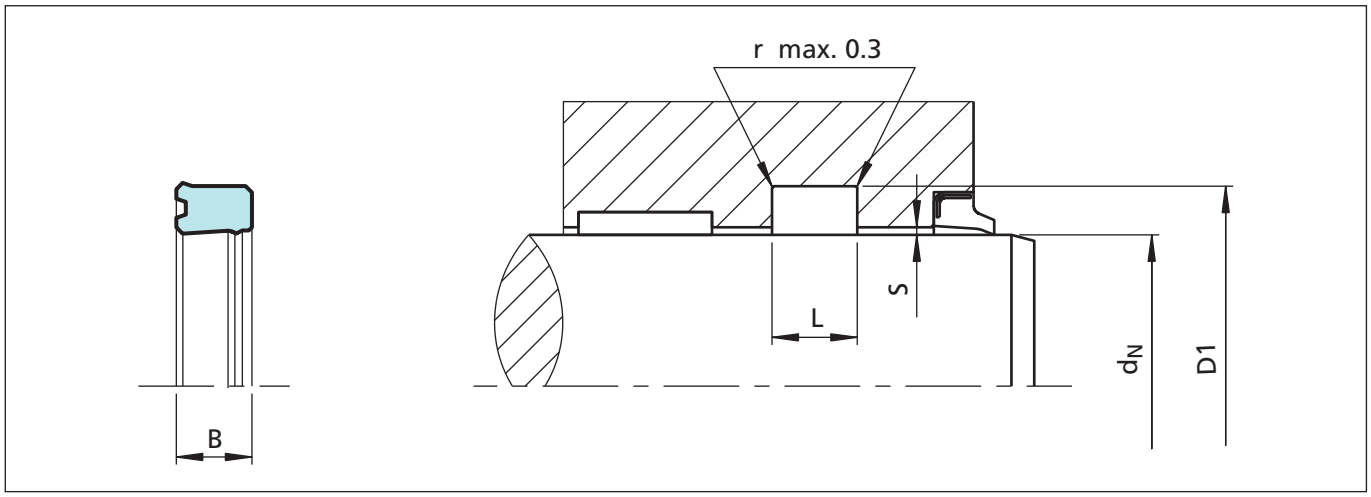

Figure 45 Installation drawing
Dimensions "S" (see table on previous page)

Ordering example

U-Cup Type RU2

Rod diameter:	d_N = 45.0 mm
Groove diameter:	D1 = 55.0 mm
Groove width:	L = 11.0 mm
TSS Part No.:	RU2200450 -

Material

Standard Zurcon®:	Z20
Special polyurethane:	93 Shore A
Colour:	turquoise

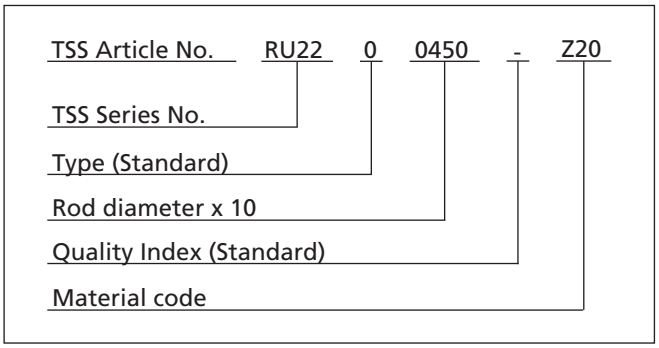

Table XXXII Installation dimensions / TSS Part No.

Note	Rod Diameter	Groove Diameter	Groove Width	Seal Width	TSS Part No.
	d_N f8/h9	**D_1** H10	**L** +0.2	**B**	
*	**6.0**	**14.0**	**6.3**	**5.8**	**RU2000060**
*	**8.0**	**16.0**	**6.3**	**5.8**	**RU2200080**
*	**10.0**	**18.0**	**6.3**	**5.8**	**RU2000100**
*	**12.0**	**20.0**	**6.3**	**5.8**	**RU2100120**
*	**14.0**	**22.0**	**6.3**	**5.8**	**RU2100140**
*	**16.0**	**24.0**	**6.3**	**5.8**	**RU2000160**
*	**18.0**	**26.0**	**6.3**	**5.8**	**RU2100180**
	20.0	**28.0**	**6.3**	**5.8**	**RU2100200**
*	**20.0**	**30.0**	**8.0**	**7.0**	**RU2300200**

Dimensions printed in **bold** type correspond to ISO/DIN 5597 and ISO 5597/1. * Split groove
Additional dimensions can be delivered on request.

Note	Rod Diameter	Groove Diameter	Groove Width	Seal Width	TSS Part No.
	d_N f8/h9	D_1 H10	L +0.2	B	
	22.0	**30.0**	**6.3**	**5.8**	**RU2300220**
	24.0	32.0	6.3	5.7	RU2000240
	25.0	**33.0**	**6.3**	**5.7**	**RU2000250**
*	**25.0**	**35.0**	**8.0**	**7.0**	**RU2400250**
*	25.0	35.0	9.0	8.0	RU2500250
	28.0	36.0	6.3	5.8	RU2000280
*	**28.0**	**38.0**	**6.3**	**5.8**	**RU2300280**
*	**28.0**	**38.0**	**8.0**	**7.0**	**RU2400280**
	32.0	**42.0**	**8.0**	**7.0**	**RU2100320**
	36.0	44.0	6.3	5.8	RU2000360
	36.0	**46.0**	**8.0**	**7.3**	**RU2300360**
	40.0	**50.0**	**8.0**	**7.0**	**RU2500400**
	45.0	53.0	6.3	5.8	RU2000450
	45.0	**55.0**	**6.3**	**5.7**	**RU2300450**
	45.0	**55.0**	**8.0**	**7.0**	**RU2500450**
	50.0	**60.0**	**8.0**	**7.0**	**RU2400500**
	56.0	66.0	7.5	6.5	RU2100560
	56.0	**71.0**	**12.5**	**11.5**	**RU2200560**
	63.0	**78.0**	**12.5**	**11.5**	**RU2100630**
	70.0	80.0	7.5	6.5	RU2200700
	80.0	**95.0**	**12.5**	**11.5**	**RU2100800**
	90.0	100.0	7.5	6.5	RU2000900
	90.0	**105.0**	**12.5**	**11.4**	**RU2400900**
	110.0	125.0	10.5	9.5	RU2001100
	110.0	**130.0**	**16.0**	**15.0**	**RU2101100**
	140.0	**160.0**	**16.0**	**15.0**	**RU2201400**

Dimensions printed in **bold** type correspond to ISO/DIN 5597 and ISO 5597/1. * Split groove
Additional dimensions can be delivered on request.

Zurcon® U-Cup RU6

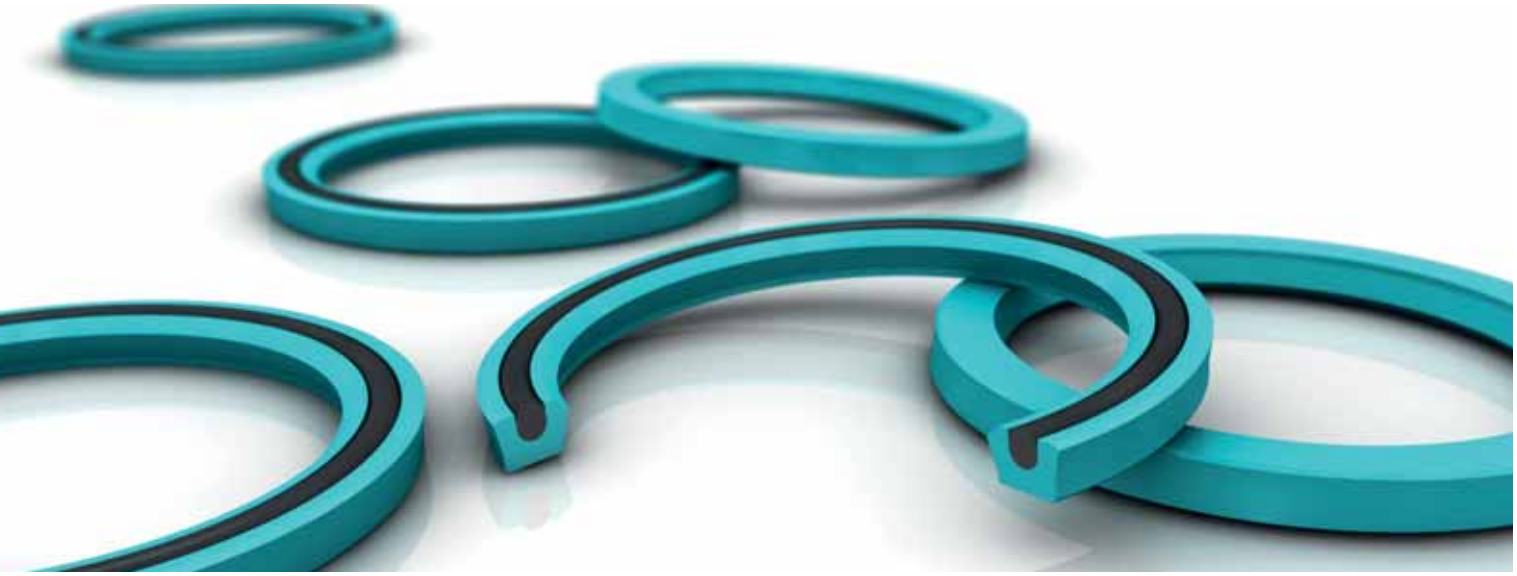

Single Acting U-Cup

Rubber Energized

Material:
Zurcon® + NBR

■ U-Cup RU6

Description

Additional to the machined seals Stepseal® 2K and Rimseal for housings due to ISO 7425/2 (rubber energised plastic seals) the U-Cup type RU6 has been developped as an injection molded seal of polyurethane material to fit in the same ISO housings. The integrated NBR O-Ring (only available for series RU62 - RU64) improves the performance at low pressure and low temperature applications. Polyurethan (Zurcon® Z20) is a proved material for U-cups due to their good mechanical properties.

Type RU6

The U-Cup type RU6 can be installed as a single seal for low to medium duty applications; for sealing systems, the U-Cup RU6 shall be installed mainly as a secondary seal together with the Turcon® Stepseal® 2K as primary seals.

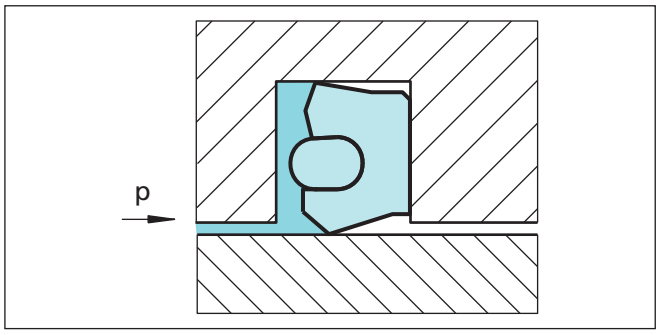

Figure 46 U-Cup, type RU6

Method of Operation

The sealing effect of the U-Cup RU6 comes from the intrinsive preload of the seal body and from the compression of the seal lip and the O-Ring during installation. In operation conditions, the radial contact forces are superimposed by the system pressure.

Due to the special design and the integrated O-Ring the RU6 U-Cups have an excellent sealing behavior with and without pressure activation. The short sealing lip gives better friction values compared to common U-Cups.

Advantages

- Very good low pressure sealability
- Simple installation
- Lower friction compared with common U-Cups
- Installation in ISO 7475/2 grooves
- Very low compression set due to O-Ring

Application Examples

- General hydraulic cylinders
- Injection molding machines
- Lift trucks
- Agricultural machines

Technical Data

Operating pressure:	Max. 25 MPa (as single element)
Speed:	Up to 0.5 m/s
Temperature:	Use in mineral oils: -35 °C to + 110 °C
Media:	Mineral oil-based hydraulic fluids.

Important Note:
The above data are maximum values and cannot be used at the same time. e.g. the maximum operating speed depends on material type, pressure, temperature and gap value.
Temperature range also dependent on medium.

Clearance

Operating Pressure MPa max.	Radial Clearance S max.
16	0.60
25	0.50

The values for S max given in this table apply to all types for the low-pressure side of the U-Cup. They are designed for an operating temperature of 60 °C. (for harsh conditions and high side loads the gap must be reduced by 50%)

Material

The thermoplastic polyurethane material Zurcon® Z20 has a high abrasion resistance, a low compression set and exhibits a high resistance to clearance extrusion.

The integrated O-Ring is an NBR with 70 shore A and a very low compression set.

U-Cup:	polyurethane 93 shore A material code Z20
O-Ring:	NBR 70 Shore A material code N
Set code:	Z20N

Design and Installation Instructions

The different forms have different grooves, see Table XXXIII.

Surface roughness

Parameter	Mating Surface µm	Groove Surface µm
R_{max}	1.00 - 4.00	< 16.0
$R_{z\ DIN}$	0.63 - 2.50	< 10.0
R_a	0.10 - 0.40	< 1.6

The material contact area R_{mr} should be approx. 50 to 70%, determined at a cut depth c = 0.25 x R_z, relative to a reference line of $C_{ref.}$ 5%.

■ Installation Recommendation

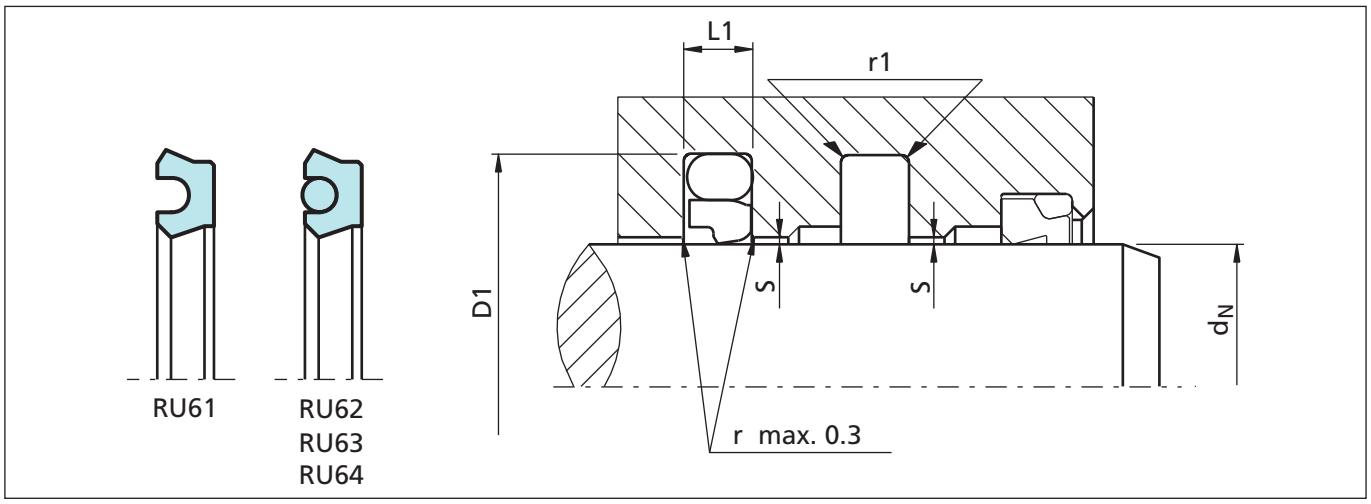

Figure 47 Installation drawing

Ordering example

U-Cup Type RU6
Rod diameter: d_N = 25.0 mm
Groove diameter: D1 = 36.0 mm
Groove width: L = 4.2 mm
TSS Part No.: RU6200250 -

Compound code seal: Z20 turquoise
Compound code O-Ring: N
Material set code: Z20N

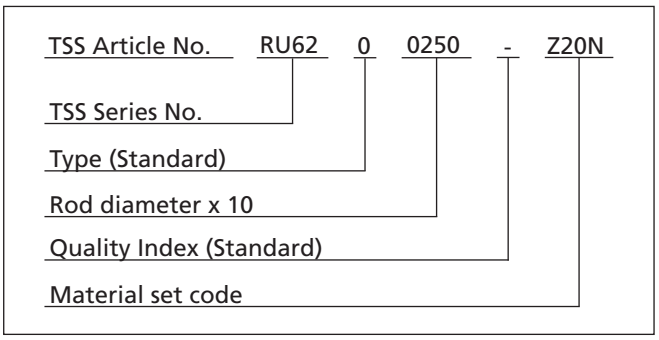

Table XXXIII Installation dimensions / TSS Part No.

Open groove	Rod Diameter	Groove Diameter	Groove Width	Radius	TSS Part No.	O-Ring Size
	d_N f8/h9	D_1 H10	L +0.2	r1		
	12.0	**19.5**	**3.2**	**0.5**	**RU6100120**	**-**
	14.0	**21.5**	**3.2**	**0.5**	**RU6100140**	**-**
	16.0	**23.5**	**3.2**	**0.5**	**RU6100160**	**-**
	18.0	**25.5**	**3.2**	**0.5**	**RU6100180**	**-**
	20.0	**27.5**	**3.2**	**0.5**	**RU6100200**	**-**
	22.0	**29.5**	**3.2**	**0.5**	**RU6100220**	**-**
	25.0	**32.5**	**3.2**	**0.5**	**RU6100250**	**-**
x	**28.0**	**39.0**	**4.2**	**0.5**	**RU6200280**	**31.42 x 2.62**
x	**32.0**	**43.0**	**4.2**	**0.5**	**RU6200320**	**36.17 x 2.62**

Dimensions printed in **bold** type correspond to ISO/DIN 7425/2. Is also suitable for TSS Stepseal® groove.

Zurcon® U-Cup RU6

Open groove	Rod Diameter	Groove Diameter	Groove Width	Radius	TSS Part No.	O-Ring Size
	d_N f8/h9	D_1 H10	L +0.2	r1		
	36.0	**47.0**	**4.2**	**0.5**	**RU6200360**	**39.34 x 2.62**
x	**40.0**	**51.0**	**4.2**	**0.5**	**RU6200400**	**44.12 x 2.62**
x	**45.0**	**56.0**	**4.2**	**0.5**	**RU6200450**	**48.90 x 2.62**
	50.0	**61.0**	**4.2**	**0.5**	**RU6200500**	**53.64 x 2.62**
	55.0	66.0	4.2	0.5	RU6200550	58.42 x 2.62
	56.0	**67.0**	**4.2**	**0.5**	**RU6200560**	**59.99 x 2.62**
	56.0	**71.5**	**6.3**	**0.9**	**RU6300560**	**59.92 x 3.53**
	63.0	**74.0**	**4.2**	**0.5**	**RU6200630**	**66.34 x 2.62**
	63.0	**78.5**	**6.3**	**0.9**	**RU6300630**	**66.27 x 3.53**
	65.0	80.5	6.3	0.9	RU6300650	69.44 x 3.53
	70.0	**85.5**	**6.3**	**0.9**	**RU6300700**	**75.79 x 3.53**
	75.0	90.5	6.3	0.9	RU6300750	82.14 x 3.53
	80.0	**95.5**	**6.3**	**0.9**	**RU6300800**	**85.32 x 3.53**
	90.0	**105.5**	**6.3**	**0.9**	**RU6300900**	**94.84 x 3.53**
	100.0	**115.5**	**6.3**	**0.9**	**RU6301000**	**104.37 x 3.53**
	110.0	**125.5**	**6.3**	**0.9**	**RU6301100**	**113.89 x 3.53**
	120.0	135.5	6.3	0.9	RU6301200	126.59 x 3.53
	130.0	145.5	6.3	0.9	RU6301300	136.12 x 3.53
	140.0	**155.5**	**6.3**	**0.9**	**RU6301400**	**145.64 x 3.53**
	150.0	165.5	6.3	0.9	RU6301500	158.34 x 3.53
	160.0	**175.5**	**6.3**	**0.9**	**RU6301600**	**164.69 x 3.53**
	180.0	**195.5**	**6.3**	**0.9**	**RU6301800**	**183.74 x 3.53**
	190.0	205.5	6.3	0.9	RU6301900	196.44 x 3.53
	200.0	**221.0**	**8.1**	**0.9**	**RU6402000**	**208.92 x 5.33**
	210.0	231.0	8.1	0.9	RU6402100	221.62 x 5.33
	260.0	281.0	8.1	0.9	RU6402600	266.07 x 5.33
	300.0	321.0	8.1	0.9	RU6403000	329.57 x 5.33
	350.0	371.0	8.1	0.9	RU6403500	354.97 x 5.33

Dimensions printed in **bold** type correspond to ISO/DIN 7425/2. Is also suitable for TSS Stepseal® groove.

Zurcon® U-Cup RU9

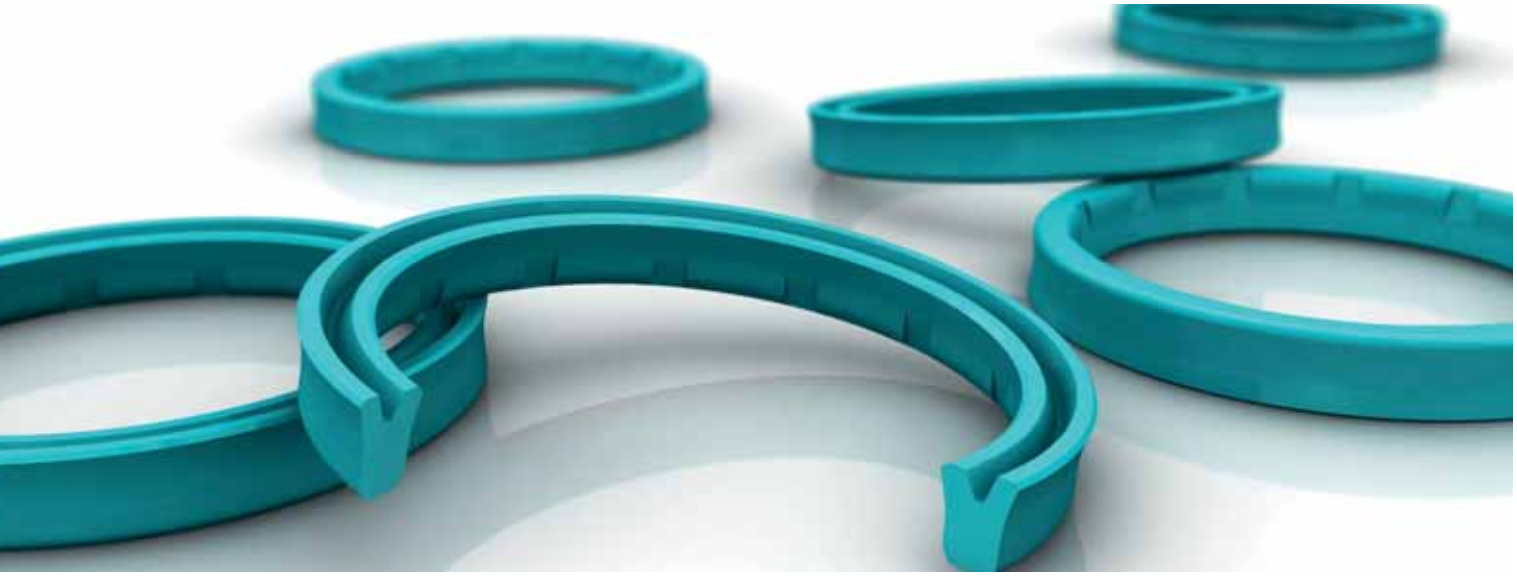

Single Acting U-Cup

New U-Cup Design

Material:
Zurcon®

■ Zurcon® U-Cup RU9

Introduction

Rod seals are particularly exposed to pressure and friction. A long service life is a specific requirement of piston rods. Features such as wear and extrusion resistance, media and temperature compatibility, low friction, compact installation dimensions and ease of assembly are also essential and require the introduction of new products and materials. It is against this background that we have developed the Zurcon® U-Cup RU9.

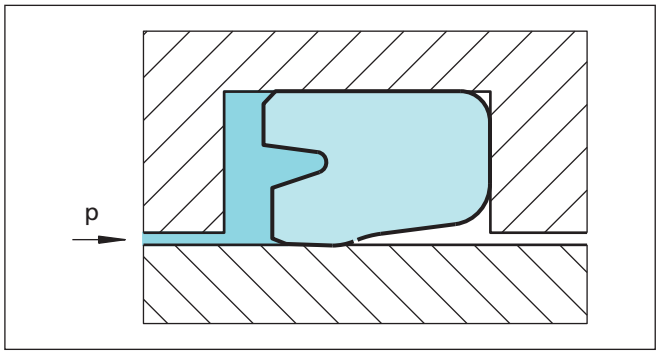

Figure 48 U-Cup, type RU9

Description

Due to its special design, behind the dynamic seal lip, the Zurcon® U-Cup RU9 with its structure of slide segments interspersed by back-pumping channels features excellent back-pumping ability across the entire pressure range. The dynamic seal slide segments also have a micro-structure with excellent tribological and sealing characteristics. As well as increasing the sealing ability of the U-Cup RU9, this also ensures a constant lubrication film underneath the seal sliding surface, reducing breakaway force even after prolonged periods of rest and reduces dynamic friction force.

■ Characteristics

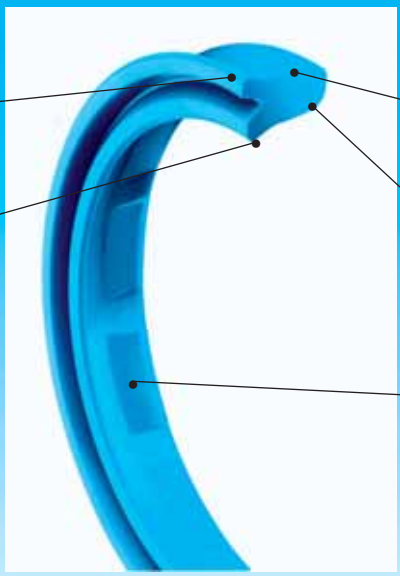

Trimmed sealing lip
High interference
Excellent static tightness

Trimmed sealing lip
High dynamic and static tightness

Expansion free space to reduce friction at the dynamic surface

Expansion free space for increased extrusion resistance

Slide segment for increased backpumping ability
Reduced friction
Low heat generation

Friction

The friction force of U-Cups dramatically increases between 2.5 and 10 MPa. The Zurcon® U-Cup RU9 has a unique feature. As the system pressure increases, the contact surface between the U-Cup and the piston rod increases. Once a specific system pressure is reached, the seal deforms to such an extent that its entire friction-generating inside surface gets in contact with the piston rod. Due to the special design of Zurcon® U-Cup RU9 there is improved pressure distribution on the rod. The resulting tribological benefits restrict the increase in friction. When we compare the friction values of conventional U-Cups with those of the Zurcon® U-Cup RU9 the results are self-evident.

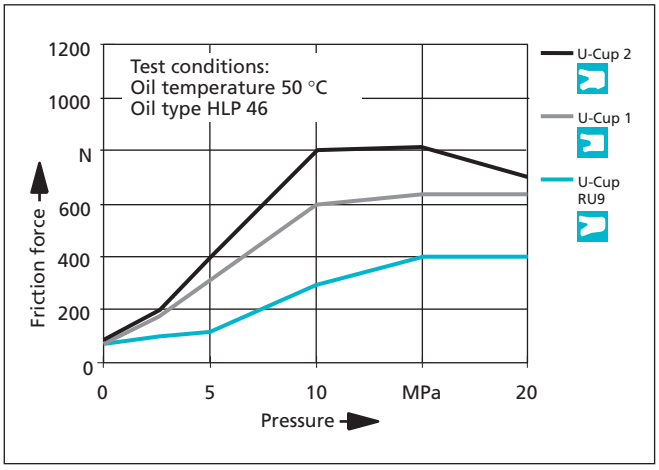

Figure 49 Friction dependent on pressure

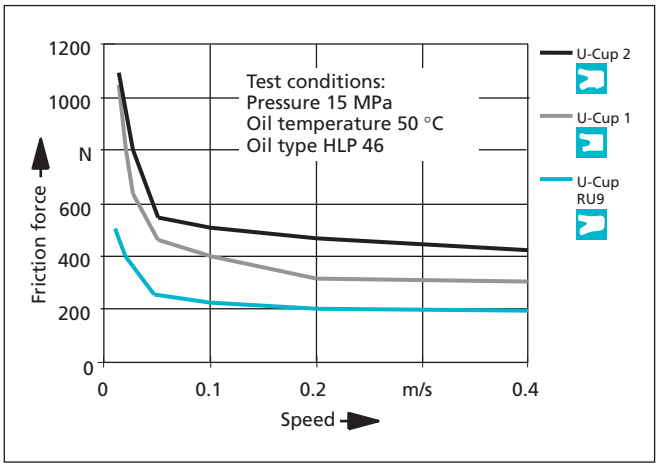

Figure 50 Friction dependent on speed

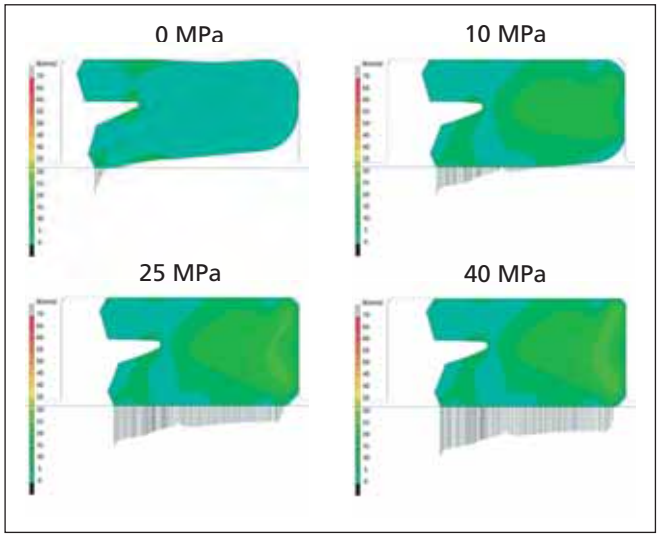

Figure 51 How the Zurcon® U-Cup RU9 performs underpressure

Sealing Performance

The high sealing performance is achieved by:

- Interference fit at the external diameter
- Special shape of both trimmed seal lips
- Controlled pressure distribution and hydrodynamic backpumping ability over a wide pressure range

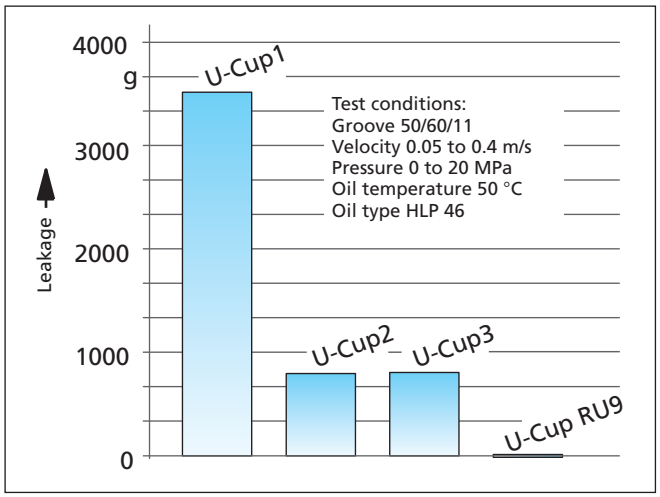

Figure 52 Leakage performance dependent on U-Cup type

Radial clearance

The new Zurcon® RU9 design combined with the special compound properties shows a better extrusion resistance compared to standard U-Cup under all working conditions. The hardware clearance can be increased significantly.

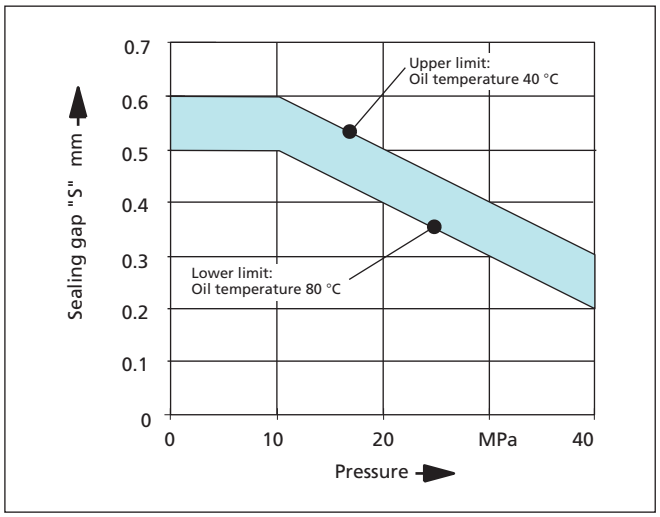

Figure 53 Radial clearance "S" as function of pressure

Advantages

- Lower friction than standard U-Cups
- Lower heat generation than standard U-Cups
- High extrusion resistance
- Excellent dynamic and static sealing
- Optimum environment protection
- Back pumping ability over the entire pressure range achieved by grooved profile
- Suitable with the Zurcon® Buffer Seal as secondary seal in "tandem design"
- Suitable for sealing systems with double scraper
- Seal stability within the groove

Application Examples

Zurcon® U-Cup RU9 can be used in all applications in whichpreviously a conventional U-Cup was applied, such as:

- Hydraulic cylinders
- Construction machinery
- Fork lifts
- Truck cranes
- Telescopic cylinders
- Agricultural machines
- Machine tools
- Injection moulding machines
- Hydraulic presses
- Gas spring

In medium/heavy duty applications the preferred solution for tandem rod sealing systems is the combination with the Zurcon® Buffer Seal primary seal and Zurcon® U-Cup RU9 in conjunction with a double acting scraper.

Materials

Zurcon® Z20 Standard polyurethane 93 Shore A
Zurcon® Z22 Premium polyurethane 93 Shore A

Colour: Turquoise

The Zurcon® polyurethane has high abrasion resistance, a low compression set, high extrusion resistance and a wide temperature range.

Technical Data

Operating conditions:

Pressure:	Up to 40 MPa
Velocity:	Up to 0.5 m/s
Temperature:	
Zurcon® Z20 Standard:	-35 °C to +110 °C
Zurcon® Z22 Premium:	-45 °C to +110 °C

Media:
Hydraulic fluids based on mineral oil: -35 °C to +110 °C
Synthetic and natural ester HEES, HETG: up to +60 °C
Flame-retardant hydraulic fluids HFA/HFB: up to +40 °C

Important Note:
The above stated limits for pressure and speed are maximum values individually. Friction heat generated by the combination of pressure and speed may cause local heat built-up. Care should be taken not to apply high values for pressure and speed at the same time.

■ Installation Recommendation

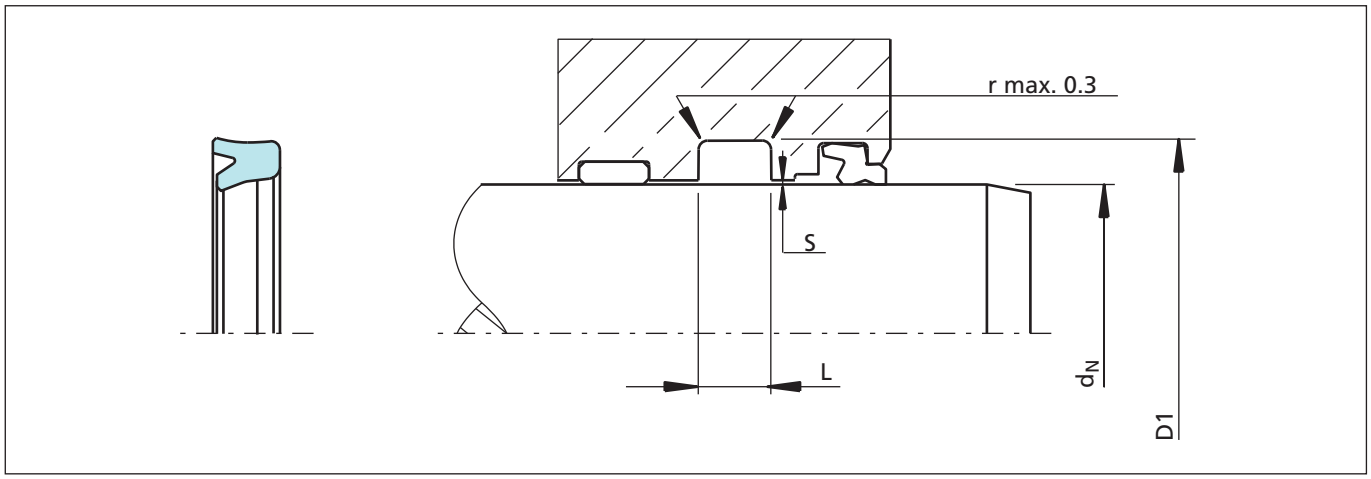

Figure 54 Installation drawing, Dimension "S" see Figure 53

Ordering Example (Metric)

Zurcon® U-Cup Type RU9

Rod diameter:	dN = 20.0 mm
Groove diameter:	D1 = 28.0 mm
Groove width:	L = 6.3 mm
TSS Part No.:	RU9000200 -

Material

Standard Zurcon®:	Z20
Special polyurethane:	93 Shore A
Colour:	turquoise

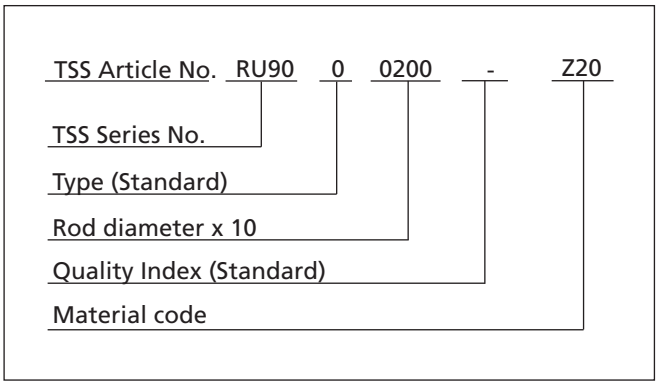

Table XXXIV Preferred Series / TSS Article No.

Rod Diameter	Groove Diameter	Groove Width	TSS Article No.
d_N f8/h9	**D1** H10	**L** + 0.25	
6.0	14.0	6.3	RU9000060-Z20
8.0	**16.0**	**6.3**	**RU9000080-Z20**
12.0	19.0	6.0	RU9000120-Z20
16.0	22.0	6.0	RU9100160-Z20
16.0	**24.0**	**6.3**	**RU9000160-Z20**
18.0	**26.0**	**6.3**	**RU9000180-Z20**
20.0	26.0	6.0	RU9100200-Z20
20.0	**28.0**	**6.3**	**RU9000200-Z20**
22.0	**30.0**	**6.3**	**RU9000220-Z20**

Dimensions and TSS article numbers printed in bold according to ISO 5597

Rod Diameter	Groove Diameter	Groove Width	TSS Article No.
d_N f8/h9	**D1** H10	**L** + 0.25	
22.0	**32.0**	**8.0**	**RU9100220-Z20**
25.0	**33.0**	**6.3**	**RU9000250-Z20**
28.0	**36.0**	**6.3**	**RU9000280-Z20**
28.0	**38.0**	**8.0**	**RU9100280-Z20**
30.0	40.0	11.0	RU9000300-Z20
32.0	**42.0**	**8.0**	**RU9000320-Z20**
35.0	**45.0**	**8.0**	**RU9000350-Z20**
36.0	**44.0**	**6.3**	**RU9100360-Z20**
36.0	44.0	9.0	RU9000360-Z20
36.0	**46.0**	**8.0**	**RU9200360-Z20**
40.0	**50.0**	**8.0**	**RU9000400-Z20**
45.0	**55.0**	**6.3**	**RU9100450-Z20**
45.0	**55.0**	**8.0**	**RU9000450-Z20**
50.0	**60.0**	**8.0**	**RU9000500-Z20**
50.0	**65.0**	**12.5**	**RU9100500-Z20**
50.0	60.0	11.0	RU9200500-Z20
55.0	65.0	8.0	RU9000550-Z20
56.0	**71.0**	**12.5**	**RU9000560-Z20**
60.0	68.0	7.0	RU9100600-Z20
60.0	**75.0**	**12.5**	**RU9000600-Z20**
63.0	**78.0**	**12.5**	**RU9000630-Z20**
65.0	75.0	8.0	RU9000650-Z20
70.0	**85.0**	**12.5**	**RU9000700-Z20**
75.0	83.0	7.0	RU9000750-Z20
80.0	**95.0**	**12.5**	**RU9100800-Z20**
90.0	100.0	7.5	RU9100900-Z20
90.0	**105.0**	**12.5**	**RU9000900-Z20**
95.0	115.0	13.0	RU9000950-Z20
100.0	**120.0**	**16.0**	**RU9001000-Z20**
105.0	120.0	12.5	RU9001050-Z20
110.0	120.0	11.0	RU9101100-Z20
110.0	**130.0**	**16.0**	**RU9001100-Z20**
115.0	125.0	11.0	RU9001150-Z20
120.0	135.0	12.5	RU9001200-Z20
125.0	**145.0**	**16.0**	**RU9001250-Z20**
140.0	**160.0**	**16.0**	**RU9001400-Z20**

Dimensions and TSS article numbers printed in bold according to ISO 5597

Zurcon® Buffer Seal

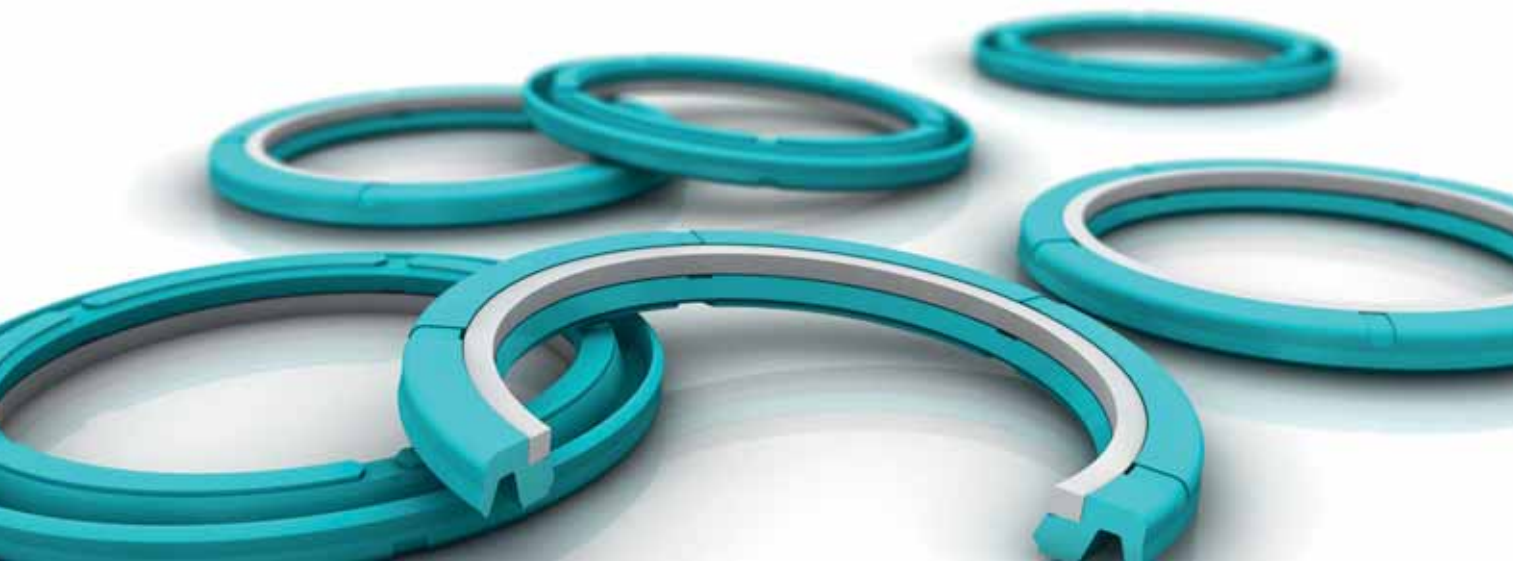

Single Acting

With integrated Back-Up Ring

Material:
Zurcon®

■ Zurcon® Buffer Seal

Introduction

In heavy duty applications, leak free performance and high service life cannot be assured by a single sealing element; therefore, specially developed "system seals" are arranged in series, building a "tandem configuration".

Each sealing element in a system has its specific function and their interaction needs to be secured to get a redundant sealing system. The primary seal in Zurcon® material has an excellent wear and extrusion resistance under extreme working conditions. It allows a fine lubrication film passing this first barrier, ensuring the necessary lubrication of the secondary sealing element for long service life.

The "tandem arrangement" requires an outstanding backpumping ability of the primary seal and the secondary seal, if a double acting scraper is installed.

Description

The single-acting Zurcon® Buffer Seal is designed as a heavy duty primary rod seal. The design of the product incorporates a combination of a Zurcon® sealing ring long with a Back-up ring.

By utilizing two materials, the performance of the product is enhanced and life is extended. The Zurcon® Buffer Seal is designed in such a way that sealing performance is not compromised under system pressure extremes. At low system pressure, the resilience of the Zurcon® material allows for effective sealing. At high system pressure, the Back-up ring is designed to contract into the extrusion gap, protecting the Zurcon® Seal ring.

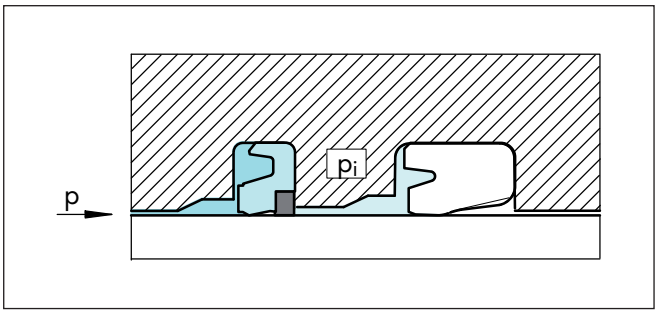

Figure 55 Tandem configuration

■ Characteristics

Zurcon® Sealing Ring
- *High abration resistance*
- *Low compression set*

Radial slots to avoid risk of "blow-by"

Dynamic lip designed to work at high pressure minimizing the friction and ensuring back pumping

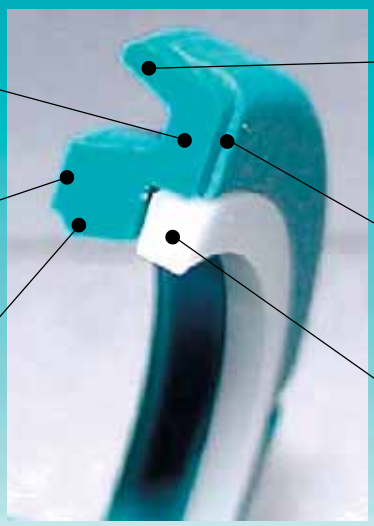

High flexible static lip optimised to relieve the inter-stage pressure

Radial channels to facilitate back pumping and pressure relieving capability

Solid POM anti-extrusion ring

Friction

The Zurcon® Buffer Seal with its special U shape and its rounded dynamic lip is able to guarantee an optimal pressure distribution and a constant lubrication of the rod across the entire pressure range.

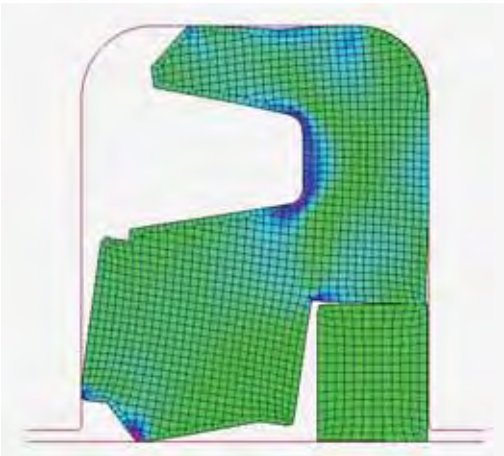

Figure 56 Zurcon® Buffer Seal un-pressurized

At un-pressurized condition head-on slots on dynamic lip assure a right positioning avoiding any risk of blow-by. The Zurcon® Buffer Seal is ready for a fast activation protecting the secondary seal from the peak of pressure.

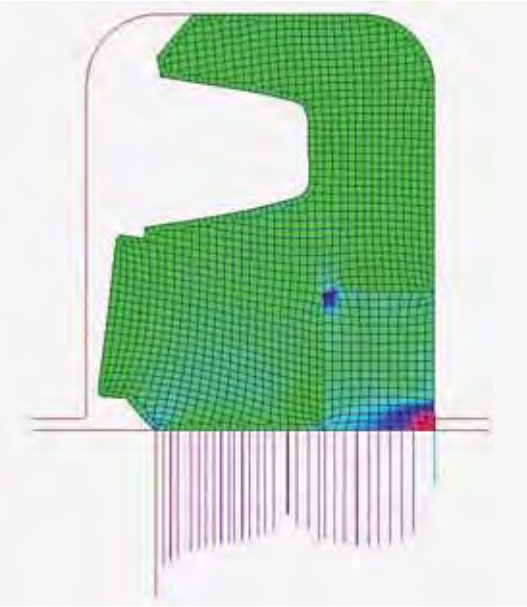

Figure 57 Pressure distribution at 40 MPa (5800 psi)

Pressure relief

In a tandem configuration the Zurcon® Buffer Seal must assure a quick and complete pressure relief in order to reduce friction and wear of the secondary seal increasing the life and overall sealing performance. The relief mechanism is activated by the special seal design through its thin, short and flexible static lip. The radial channels on the back side offer the fluid a direct stream up to both lips. A minimum difference between the pressure trapped and the pressure in the chamber is able to deflect the seal and recover the same pressure level.

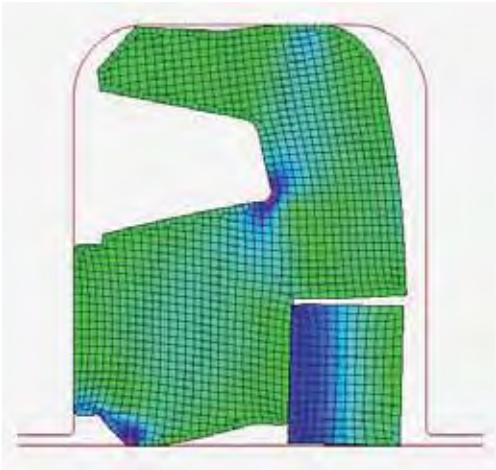

Figure 58 Pressure relief with a back pressure bigger of 0.5 MPa (72.5 psi)

Advantages

- Manufactured from Zurcon® and high-performance materials
- Conforms to ISO 7425/2 groove standards
- Suitable also for Stepseal® groove
- Excellent back-pumping over entire pressure range
- Resistant against high temperature and pressure
- Special design of dynamic seal lip for superior performance
- Designed with radial relief notches to prevent pressure
- trapping
- Superior wear and abrasion resistance
- Low compression set

Application Examples

Medium and Heavy duty applications:

- Mobile equipment
- Lift trucks
- Earthmoving equipment

Materials - Standard application

For hydraulic components in mineral oils or medias with good lubricating performance.

Seal Ring:	Zurcon® Z20 Standard polyurethane
Back-up Ring:	Polyacetal resin (POM)
Set reference:	Z2054

Materials - Low temperature application

Seal Ring:	Zurcon® Z22 Premium polyurethane
Back-up Ring:	Polyacetal resin (POM)
Set reference:	Z2254

The Zurcon® polyurethane has high abrasion resistance, a low compression set, high extrusion resistance and a wide temperature range.

Technical Data

Operating conditions:

The Zurcon® Buffer Seal is designed for high pressure rod sealing applications in extreme conditions.

Pressure:	Up to 40 MPa Up to 60 MPa peak
Velocity:	Up to 1 m/s
Temperature: Zurcon® Z20 Standard: Zurcon® Z22 Premium:	 -35 °C to +110 °C -45 °C to +110 °C
Media: Hydraulic fluids based onmineral oil:	 -35 °C to +110 °C
Synthetic and natural ester HEES, HETG:	up to +60 °C
Flame-retardant hydraulic fluids HFA/HFB:	up to +40 °C

■ Installation Recommendation

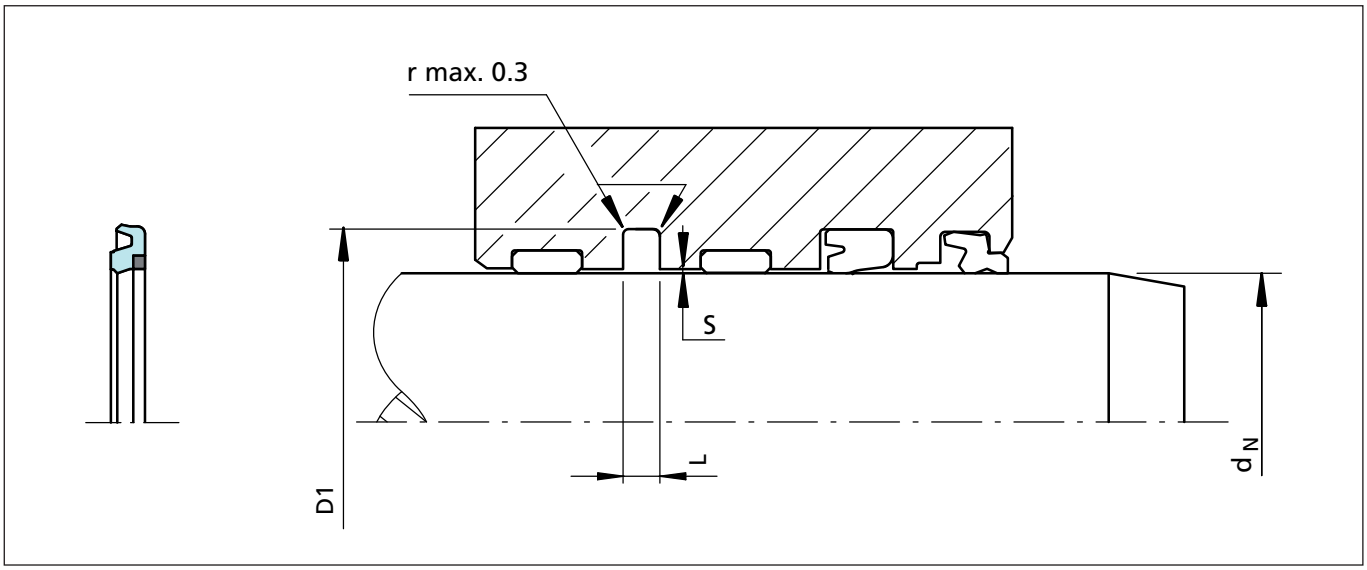

Figure 59 Installation drawing

TSS Ordering Example

Buffer Seal Type RUK
Rod diameter: d_N = 63.0 mm
Groove diameter: D1 = 78.5 mm
Groove width: L = 6.3 mm
TSS Part No.: RUK3B0630 -

Material

Compound: Z2054
(Zurcon® Z20 + POM Back-up Ring)

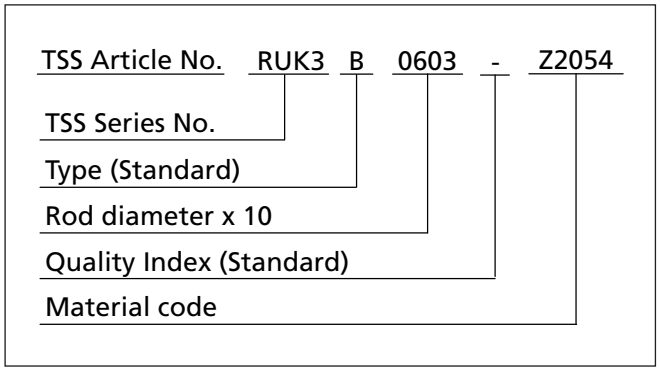

Table XXXV Installation dimensions

Rod Diameter	Groove Diameter	Groove Width	Radial Clearance	TSS Article No.
d_N f8/h9	**D1** +0.2	**L** +0.25	**S** max.	
40.0	55.5	6.3	0.4	RUK3B0400-Z2054
45.0	**60.5**	**6.3**	**0.4**	**RUK3B0450-Z2054**
50.0	**65.5**	**6.3**	**0.4**	**RUK3B0500-Z2054**
55.0	70.5	6.3	0.4	RUK3B0550-Z2054
56.0	**71.5**	**6.3**	**0.4**	**RUK3B0560-Z2054**
60.0	75.5	6.3	0.4	RUK3B0600-Z2054
63.0	**78.5**	**6.3**	**0.4**	**RUK3B0630-Z2054**
65.0	80.5	6.3	0.4	RUK3B0650-Z2054
70.0	**85.5**	**6.3**	**0.4**	**RUK3B0700-Z2054**

Rod Diameter	Groove Diameter	Groove Width	Radial Clearance	TSS Article No.
d_N f8/h9	**D1** +0.2	**L** +0.25	**S** max.	
75.0	90.5	6.3	0.4	RUK3B0750-Z2054
80.0	**95.5**	**6.3**	**0.4**	**RUK3B0800-Z2054**
85.0	100.5	6.3	0.4	RUK3B0850-Z2054
90.0	**105.5**	**6.3**	**0.4**	**RUK3B0900-Z2054**
95.0	**110.5**	**6.3**	**0.4**	**RUK3B0950-Z2054**
100.0	**115.5**	**6.3**	**0.4**	**RUK3B1000-Z2054**
105.0	120.5	6.3	0.4	RUK3B1050-Z2054
110.0	**125.5**	**6.3**	**0.4**	**RUK3B1100-Z2054**
115.0	130.5	6.3	0.4	RUK3B1150-Z2054
125.0	**140.5**	**6.3**	**0.4**	**RUK3B1250-Z2054**
140.0	**155.5**	**6.3**	**0.4**	**RUK3B1400-Z2054**

Turcon® Variseal® M2

Single Acting

Spring Energized Plastic U-Cup

Material:
Turcon® and Zurcon®

■ Turcon® Variseal® M2

Description

The Turcon® Variseal® M2 is a single-acting seal consisting of a U-shaped seal jacket and a V-shaped corrosion resistant spring.

Variseal® M2 has an asymmetric seal profile. The heavy profile of its dynamic lip with an optimized front angle offers good leakage control, reduced friction and long service life.

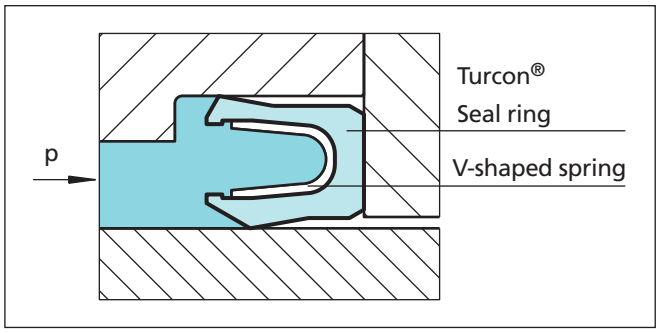

Figure 60 Turcon® Variseal® M2

At low and zero pressure, the metal spring provides the primary sealing force. As the system pressure increases, the main sealing force is achieved by the system pressure and ensures a tight seal from zero to high pressure.

The possibility of matching suitable materials for the seal and the spring allows use in a wide range of applications going beyond the field of hydraulics, e.g. in the chemical, pharmaceutical and foodstuff industry.

The Variseal® M2 can be sterilized and is available in a special Hi-Clean version where the spring cavity is filled with a Silicone gel preventing contaminants from being entrapped in the seal. This design also works well in applications involving mud, slurries or adhersives to keep grit from packing into the seal cavity and inhibiting the spring action.

For applications with highly viscous media, please contact our engineering department.

Variseal® M2 seals can be installed in grooves to AS4716 and ISO 3771. The seal can only be installed to a limited extent in closed grooves. Installation instructions, see Figure 15.

Advantages

- Resistant to most fluids and chemicals
- Low coefficients of friction
- Stick-slip-free operating for precise control
- High abrasion resistance and dimensional stability
- Can handle rapid changes in temperature
- No contamination in contact with foodstuffs, pharmaceutical and medicinal fluids
- High temperature range
- Sterilisable
- Unlimited shelf life.

Application Examples

Turcon® Variseal® M2 is the recommended sealing element for all applications requiring stick slip free operation as well as chemical resistance against almost all media such as:

- Valves
- Pumps
- Separators
- Actuators
- Dosing devices

It requires a mating surface of high quality to avoid high wear rate.

Technical Data

Operating conditions

Pressure:	For static loads: 40 MPa (400 Bar) For dynamic loads: 20 MPa (200 Bar)
Speed:	Reciprocating: Up to 15 m/s Rotating: Up to 1 m/s
Temperature:	-70 °C to +260 °C For specific applications beyond indicated range, please enquire
Media:	Virtually all fluids, chemicals and gases

Important Note:
The above data are maximum values, when using standard materials and geometries, and cannot be used at the same time. e.g. the maximum operating speed depends on material type, pressure, temperature and gap value. Temperature range also dependent on medium.

Materials

All materials used are physiologically safe. They contain no odour or taste-affecting substances.

The following material combination has proved effective for most fluid applications:

Seal ring: Turcon® T40

Spring: Stainless Steel Material No. AISI 301 Code S

For gas application use:

Seal ring: Turcon® T05/Zurcon® Z80

For use in accordance with the demands of the "Food and Drug Administration", suitable materials are available on request.

Table XXXVI Turcon® and Zurcon® Materials for Variseal® M2

Material, Applications, Properties	Code	Spring Material	Code	Operating Temp. * °C	Mating Surface Material	MPa max.
Turcon® T40 For all lubricating and non-lubricating hydraulic fluids, hydraulic oils without zinc, **water hydraulic, hard mating surfaces.** Surface texture not suitable for gases. Carbon fibre filled Colour: Grey	T40	AISI 301	S	-70 to +260	Steel, hardened Steel, chromeplated	40
Turcon® T05 For all lubricating hydraulic fluids, soft mating surfaces, **very good sliding properties**, low friction. Colour: Turquoise	T05	AISI 301	S	-70 to +260	Steel Steel, chromeplated Cast iron Stainless steel Aluminium Bronze Alloys	20
Zurcon® Z80 For lubricating and non-lubricating hydraulic fluids, high abrasion resistance, very good chemical resistance, limited temperature resistance. **FDA compliance.** Ultra high molecular weight polyethylen Colour: White to off-white	Z80	AISI 301	S	-70 to +80	Steel Steel, chromeplated Stainless steel Aluminium Bronze Ceramic coating	40
Zurcon® Z48 For tight sealing with long wear life, in applications without high temperatures or corrosive chemicals. Colour: Black	Z48	AISI 301	S	-60 to +130	Steel Steel, chromeplated Cast iron Stainless steel Aluminium Bronze Alloys Ceramic coating	40

* Depending on media. Highlighted material is standard.

■ Installation Recommendation

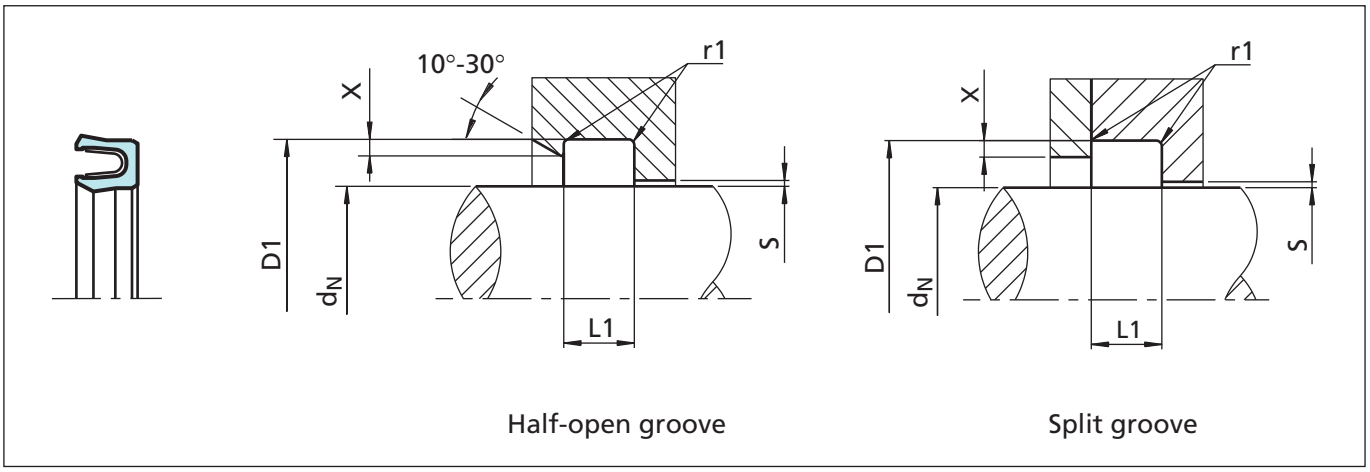

Figure 61 Installation drawing

Table XXXVII Installation dimensions

Series No.	Rod Diameter d_N h9		Groove Diameter	Groove Width	Radius	Step[2] Height	Radial Clearance S max. *			
	Recommended Range	Extended[1] Range	D1 H9	L1 +0.2	r_1	X min.	<2 MPa	<10 MPa	<20 MPa	<40 MPa
RVA0	3.0 - 9.9	3.0 - 40.0	d_N + 2.9	2.4	0.4	0.4	0.20	0.10	0.08	0.05
RVA1	10.0 - 19.9	6.0 - 200.0[3]	d_N + 4.5	3.6	0.4	0.6	0.25	0.15	0.10	0.07
RVA2	20.0 - 39.9	10.0 - 400.0[3]	d_N + 6.2	4.8	0.6	0.7	0.35	0.20	0.15	0.08
RVA3	40.0 - 119.9	20.0 - 700.0[3]	d_N + 9.4	7.1	0.8	0.8	0.50	0.25	0.20	0.10
RVA4	120.0 - 630.0	35.0 - 1600.0[3]	d_N + 12.2	9.5	0.8	0.9	0.60	0.30	0.25	0.12
RVA5	1000.0 - 2600.0	80.0 - 2600.0[3]	d_N + 19.0	15.0	0.8	0.9	0.90	0.50	0.40	0.20

* At pressures **> 40 MPa:** use diameter tolerance H8/f8 (bore/rod) in area of the seal.
[1] Available on request
[2] Maximum X = 0.02 x d_N
Note: Recommended Step Height is not always obtainable
[3] By diameters larger than "Recommended Range": the tolerance on d_N and D_1 is changed to h8/H8.By pressure above 40 MPa, please contact Trelleborg Sealing Solutions

Ordering Example

Turcon® Variseal® M2, recommended range, Series RVA3 (from Table XXXVII).
Rod diameter: d_N = 80.0 mm
TSS Part No.: RVA300800 (from Table XXXVIII)

For other seal and spring materials please contact the Trelleborg Sealing Solutions representative.

** For diameters ≥ 1000.0 mm multiply only by factor 1.
Example: RVA5 for diameter 1200.0 mm.
TSS Article No.: RVA5**X1200** - T40S.

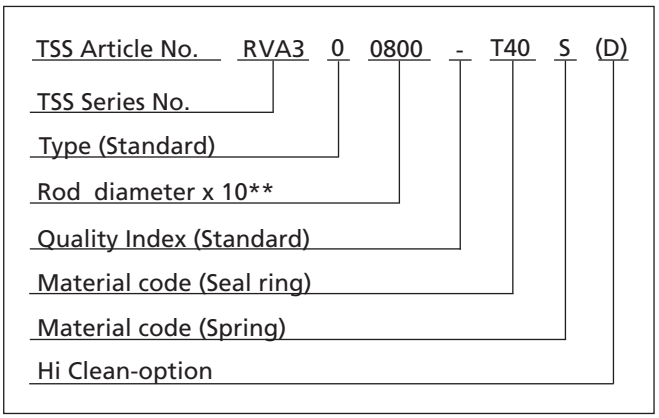

Table XXXVIII Installation dimensions / TSS Part No.

Rod Diameter	Groove Diameter	Groove Width	TSS Part No.
d_N h9	D_1 H9	L1 +0.2	
3.0	5.9	2.4	RVA000030
4.0	**6.9**	**2.4**	**RVA000040**
5.0	**7.9**	**2.4**	**RVA000050**
6.0	**8.9**	**2.4**	**RVA000060**
8.0	**10.9**	**2.4**	**RVA000080**
10.0	**14.5**	**3.6**	**RVA100100**
12.0	**16.5**	**3.6**	**RVA100120**
14.0	**18.5**	**3.6**	**RVA100140**
15.0	19.5	3.6	RVA100150
16.0	**20.5**	**3.6**	**RVA100160**
18.0	**22.5**	**3.6**	**RVA100180**
20.0	**26.2**	**4.8**	**RVA200200**
22.0	**28.2**	**4.8**	**RVA200220**
25.0	**31.2**	**4.8**	**RVA200250**
28.0	**34.2**	**4.8**	**RVA200280**
30.0	36.2	4.8	RVA200300
32.0	**38.2**	**4.8**	**RVA200320**
35.0	41.2	4.8	RVA200350
36.0	**42.2**	**4.8**	**RVA200360**
40.0	**49.4**	**7.1**	**RVA300400**
42.0	51.4	7.1	RVA300420
45.0	**54.4**	**7.1**	**RVA300450**
48.0	57.4	7.1	RVA300480
50.0	**59.4**	**7.1**	**RVA300500**
52.0	61.4	7.1	RVA300520
55.0	64.4	7.1	RVA300550
56.0	**65.4**	**7.1**	**RVA300560**
60.0	69.4	7.1	RVA300600
63.0	**72.4**	**7.1**	**RVA300630**
65.0	74.4	7.1	RVA300650
70.0	**79.4**	**7.1**	**RVA300700**
75.0	84.4	7.1	RVA300750
80.0	**89.4**	**7.1**	**RVA300800**
85.0	94.4	7.1	RVA300850
90.0	**99.4**	**7.1**	**RVA300900**
95.0	104.4	7.1	RVA300950

Rod Diameter	Groove Diameter	Groove Width	TSS Part No.
d_N h9	D_1 H9	L1 +0.2	
100.0	**109.4**	**7.1**	**RVA301000**
105.0	114.4	7.1	RVA301050
110.0	**119.4**	**7.1**	**RVA301100**
115.0	124.4	7.1	RVA301150
120.0	132.2	9.5	RVA401200
125.0	**137.2**	**9.5**	**RVA401250**
130.0	142.2	9.5	RVA401300
135.0	147.2	9.5	RVA401350
140.0	**152.2**	**9.5**	**RVA401400**
150.0	162.2	9.5	RVA401500
160.0	**172.2**	**9.5**	**RVA401600**
170.0	182.2	9.5	RVA401700
180.0	**192.2**	**9.5**	**RVA401800**
190.0	202.2	9.5	RVA401900
200.0	**212.2**	**9.5**	**RVA402000**
210.0	222.2	9.5	RVA402100
220.0	**232.2**	**9.5**	**RVA402200**
230.0	242.2	9.5	RVA402300
240.0	252.2	9.5	RVA402400
250.0	**262.2**	**9.5**	**RVA402500**
280.0	**292.2**	**9.5**	**RVA402800**
300.0	312.2	9.5	RVA403000
320.0	**332.2**	**9.5**	**RVA403200**
350.0	362.2	9.5	RVA403500
360.0	**372.2**	**9.5**	**RVA403600**
400.0	412.2	9.5	RVA404000

The rod diameters in **bold** type correspond to the recommendations of ISO 3320.
Other dimensions and all intermediate sizes up to 2.500 mm diameter including imperial (inch) sizes can be supplied.

Turcon® VL Seal®

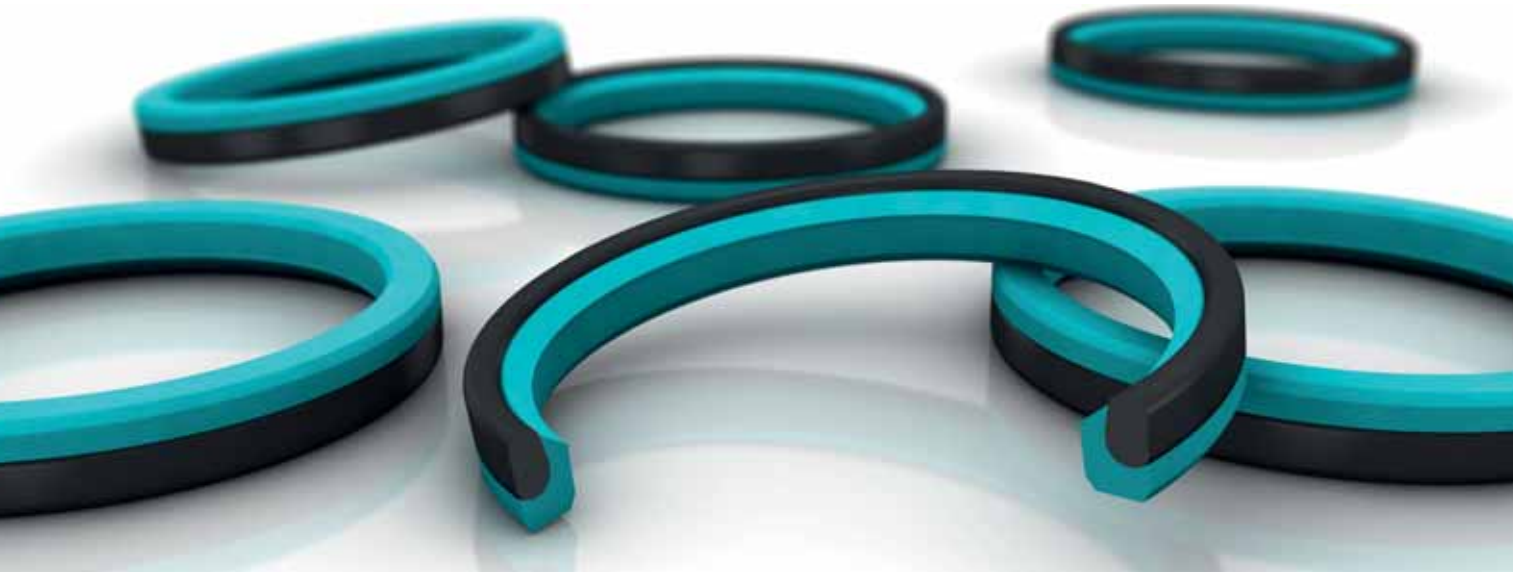

Single Acting

Rubber Energized Plastic Faced Seal

Material:
Turcon® and Zurcon®

■ Turcon® VL Seal® *

Description

Turcon® VL Seal® is a new generation unidirectional Rod seal for the same groove dimensions as standard O-Rings, see Figure 62.

The design has taken the latest empirical and theoretical experience into account in order to optimise performance, friction, leakage and service life. This has been achieved through FEA simulation, in-house testing and qualification in the most demanding Aerospace applications.

The VL Seal® has no static lip, instead static sealing is effectively provided by the O-Ring. The O-Ring is protected from damage under pressure cycles by the concave seal back which supports the O-Ring and keeps it in position also at high working pressure.

The VL Seal® is designed with hydrodynamic back-pumping effect, which allows the seal to relieve pressure trapped between tandem seals or between seals and double-acting scrapers.

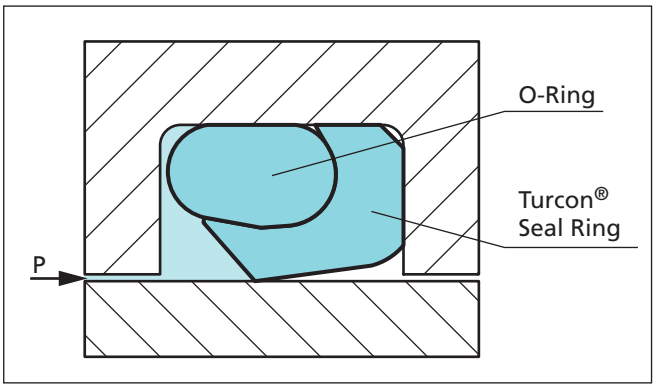

Figure 62 Turcon® VL Seal® mounted in O-Ring groove

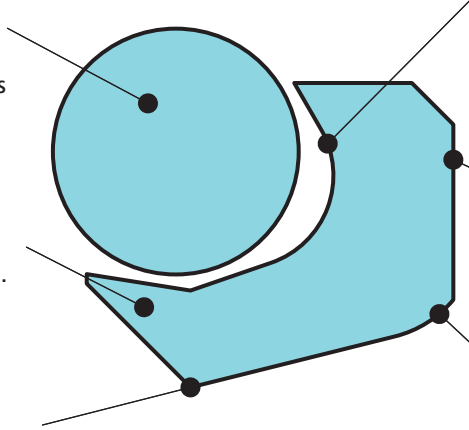

Elastomer O-Ring
High flexibility to satisfy hardware tolerances. High static sealing function eliminates fluid flow in the groove. Elastomer materials available to meet a wide variety of service conditions.

Stabilising Wing
Keeps the O-Ring in the correct position also when un-pressurised. Assists pressure transfer from O-Ring to seal lip. Stabilises the seal profile.

Pressure Relieved Sealing Lip
Optimised sealing lip position for high sealing efficiency. Short dynamic contact area for low friction and torque.

Contoured O-Ring Contact Zone
Stabilises the O-Ring position in the seal groove. Secures optimal pressure transfer to dynamic sealing lip. Prevents O-Ring nibbling.

Stabilised Groove Contact
Strong seal profile with full groove wall contact for stable seal position. Prevents premature extrusion of seal material into the radial clearance.

Contoured Rear Chamfer for Hydrodynamic Back-pumping
Improved back-pumping of residual oil film for increased sealing efficiency. Increased radial clearance.

* Patent pending. (US Patent No. 6,497,415)

Method of operation

The sealing mechanism of the Turcon® VL Seal® is based on the hydrodynamic properties of the seal. The specially formed seal edge has a steep contact pressure gradient on the high pressure side and a shallow contact pressure gradient on the low pressure side. This ensures that the fluid film adhering to the piston rod is returned to the high pressure chamber on the return stroke of the rod. This prevents the micro-fluid layer, which is carried out of the high pressure chamber when the piston rod is extended, from causing leaks.

This return delivery property prevents the build-up of inter-seas pressure normally associated with tandem seal configurations (Figure 63). Inter-seal pressure depends on the system pressure, speed, stroke length and groove design.

Advantages

- Groove design with shallow radial depth
- Tight leakage control
- Low friction with small contact area between seal and counter surface
- Featuring the Turcon® Stepseal® 2K back pumping effect
- Utilize standard O-Ring installation groove
- Available in all diameter sizes from 6 to 2600 mm

Application Examples

The VL Seal® is recommended for hydraulics and general machine construction as an alternative to Turcon® Stepseal® 2K and other single acting seals according to their individual advantages:

- Machine tools
- Automation
- Handling devises
- Telescopic cylinders
- Automobile industry
- Aerospace hydraulics
- Servo hydraulics
- Valves
- Valve stems
- Down-hole tools
- O-Ring replacement

Technical Data

Operating conditions:

Pressure:	Up to 60 MPa
Speed:	Up to 15 m/s with reciprocating movements, requency up to 5 Hz
Temperature:	-45 °C to +200 °C (depending on O-Ring material)
Media:	Mineral oil-based hydraulic fluids, flame retardant hydraulic fluids, environmentally safe hydraulic, fluids (bio-oils), phosphate ester, water and others, depending on the O-Ring material compatibility (see Table XXXIX)
Clearance:	The maximum permissible radial clearance Smax is shown in Table XL, as a function of the operating pressure and functional diameter.

Materials

The following material combinations have proven effective for hydraulic applications:

All round material for hydraulic applications with reciprocating, short stroke or helical movements in mineral oils, flame retardant hydraulic fluids HFC, phosphate ester, bio-oils or fluids having less satisfactory lubricating properties:

Turcon® VL Seal ®:	Turcon® M12	
O-Ring:	NBR, 70 Shore A FKM, 70 Shore A	N V
Set code:	M12N or M12V	

For medium to heavy applictions with reciprocating movements in mineral oils and other media with good lubrication.

Turcon® VL Seal ®:	Turcon® T46	
O-Ring:	NBR, 70 Shore A FKM, 70 Shore A	N V
Set code:	T46N or T46V	

Zurcon® Z52 is recommended for VL Seal® as alternative to polyurethane U-Cups especially outside the size range of these products.

For specific applications, all Turcon® materials are available. Other viable material combinations are listed in Table XXXIX.

Installation dimensions

The VL Seal® is dimensionally interchangeable with seals for O-Ring housings, like Vectorseal™, Double Delta® and Turcon® Variseal® M2. Groove dimensions, radial clearances and recommended seal series in relation to diameter are as illustrated in Table XL.

VL Seal® is preferably installed in closed grooves according to Figure 63 page 159. Depending on type and size installation in split grooves is also possible. Recommended minimum diameters for installation in closed grooves see Table VII page 13.

Redundant Sealing System

In many applications, secondary seal systems are demanded. Figure 63 shows such a tandem configuration with the VL Seal®.

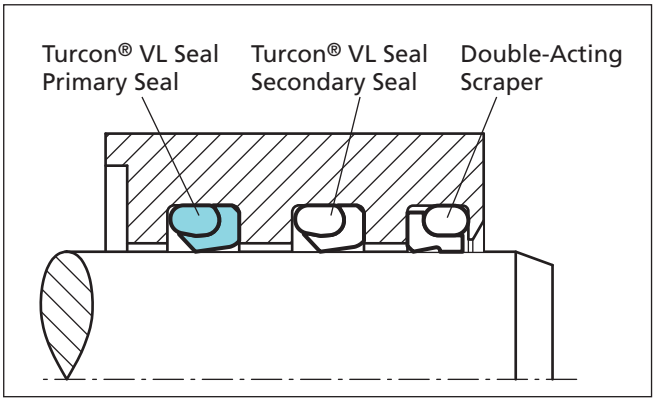

Figure 63 Turcon® VL Seal® in tandem configuration

Radial Notch

Turcon® VL Seal® can be delivered with radial notches at the "back side" (low pressure side).

This is an advantage if the seal is used in rotary applications. The notches can prevent the seal from rotating in the groove by avoiding pressurised fluid being trapped between seal and groove corner.

Table XXXIX Turcon® and Zurcon® Materials for VL Seal®

Material, Applications, Properties	Code	O-Ring Material Shore A	Code	O-Ring Operating Temp.*°C	Mating Surface Material	MPa max. Dyna-mic
Turcon® M12 First material choice for seals in linear motion Overall improved properties For new constructions and updating For all commonly applied hydraulic fluids including fluids with low lubrication performance Lowest friction and best sliding properties Lowest wear on seals Improved absorption of abrasive contaminants No wear or abrasion of counter surface Mineral fibre and Additives filled Colour: Dark grey	M12	NBR- 70	N	-30 to +100	Steel Steel hardened Steel chrome plated (rod) Steel plated (rod) Cast iron Stainless steel Titanium	50
		NBR- 70 Low temp	T	45 to +80		
		FKM- 70	V	-10 to +200		
Turcon® T05 For lubricating fluids Also for gas service Very low friction Very good sliding and sealing properties Colour: Turquoise	T05	NBR- 70	N	-30 to +100	Steel Steel hardened Steel chrome plated (rod)	20
		NBR- 70 Low temp.	T	-45 to +80		
		FKM- 70	V	-10 to +200		
Turcon® T08 For lubricating fluids and linear motion Very high compressive strength and extrusion resistance Hard counter surfaces is recommended Bronze filled Colour: Light to dark brown, which may have variations in shading	T08	NBR- 70	N	-30 to +100	Steel hardened Steel chrome plated (rod) Cast iron	60
		NBR- 70 Low temp.	T	-45 to +80		
		FKM- 70	V	-10 to +200		
Turcon® T29 For lubricating and non-lubricating fluids Good extrusion resistance Surface texture is not suitable for gas sealing Not for electrically conducting fluids Carbon fibre filled Colour: Grey	T29	NBR- 70 S	N	-30 to +100	Steel Steel hardened Steel chrome plated (rod) Cast iron Stainless steel	30
		NBR- 70 Low temp.	T	-45 to +80		
		FKM- 70	V	-10 to +200		
		EPDM- 70	E**	-45 to +145		
Turcon® T40 For lubricating and non-lubricating fluids High frequency and short strokes **Water hydraulics** Surface texture is not suitable for gas sealing Carbon fibre filled Colour: Grey.	T40	NBR- 70	N	-30 to +100	Steel Steel hardened Steel chrome plated (rod) Cast iron Stainless steel Aluminium	25
		NBR- 70 Low temp.	T	-45 to +80		
		FKM- 70	V	-10 to +200		
		EPDM- 70	E**	-45 to +145		

* The O-Ring Operation Temperature is only valid in mineral hydraulic oil. ** Material not suitable for mineral oils.
*** Max. Ø 2200 mm. Highlighted materials are standard.

Material, Applications, Properties	Code	O-Ring Material Shore A	Code	O-Ring Operating Temp.*°C	Mating Surface Material	MPa max. Dyna-mic
Turcon® T46 For lubricated hydraulics in linear motion High compressive strength High extrusion resistance Very good sliding and wear properties BAM tested Bronze filled Colour: Light to dark brown, which may have variations in shading.	T46	NBR- 70	N	-30 to +100	Steel hardened Steel chrome plated (rod) Cast iron	50
		NBR - 70 Low temp.	T	-45 to +80		
		FKM- 70	V	-10 to +200		
Zurcon® Z51*** For mineral oil based fluids **Very high abrasion and extrusion resistance** For counter surface with rougher surface finish Limited chemical resistance Max. working temperature 110 °C Cast polyurethane Colour: Yellow to light-brown.	Z51	NBR- 70	N	-30 to +100	Steel Steel hardened Steel chrome plated (rod) Cast iron Stainless steel Ceramic coating	60
		NBR- 70 Low temp.	T	-45 to +80		
Zurcon® Z52*** For mineral oil based fluids Linear and slowly turning movements High abrasion resistance For counter surface with rougher surface finish Good extrusion resistance Limited chemical resistance Max. working temperature 110 °C Cast polyurethane Colour: Turquoise.	Z52	NBR- 70	N	-30 to +100	Steel Steel hardened Steel chrome plated (rod) Cast iron Stainless steel Ceramic coating	25
		NBR- 70 Low temp.	T	-45 to +80		
Zurcon® Z80 For lubricating and non-lubricating fluids Water based fluids, air and gases Dry air pneumatics High abrasion and extrusion resistance For service in abrasive conditions and media with particles Good chemical resistance Limited temperature capability (-60 to +80 °C) UHMWPE (Ultra High Molecular Weight Polyethylene) Colour: White to off-white.	Z80	NBR- 70	N	-30 to +100	Steel Steel hardened Steel chrome plated (rod) Stainless steel Aluminium Ceramic coating	35
		NBR- 70 Low temp.	T	-45 to +80		
		EPDM- 70	E**	-45 to(+145)		

* The O-Ring Operation Temperature is only valid in mineral hydraulic oil. ** Material not suitable for mineral oils.
*** Max. Ø 2200 mm. Highlighted materials are standard.

■ Installation Recommendation

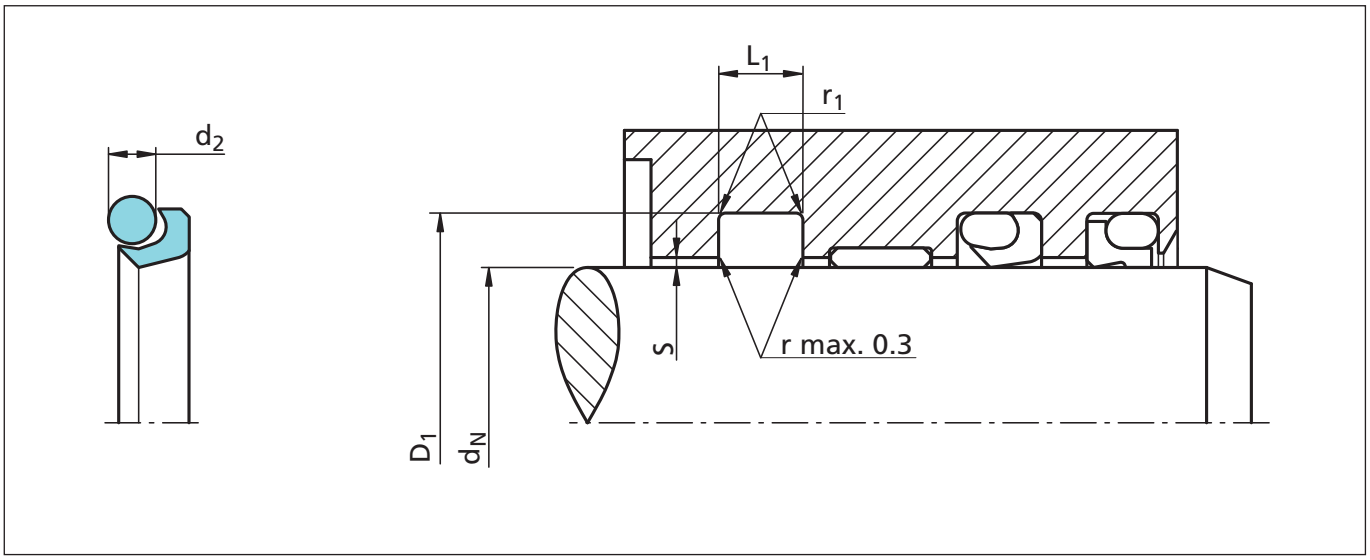

Figure 64 Installation drawing

Table XL Installation dimensions - Standard Recommendations

Rod Diameter d_N f8/h9			Groove Diameter D_1 H9	Groove Width L_1 +0.2	Radius r_1	Radial Clearance* S_{max}			O-Ring Cross-Section d_2
Series No.	Standard Application	Available Range				10 MPa	20 MPa	30 MPa	
REL10	10 - 19.9	6 - 100.0	d_N + 4.5	3.6	0.4	0.40	0.25	0.15	1.78
REL20	20 - 39.9	10 - 200.0	d_N + 6.2	4.8	0.6	0.40	0.25	0.20	2.62
REL30	40 - 119.9	20 - 400.0	d_N + 9.4	7.1	0.8	0.50	0.30	0.20	3.53
REL40	120 - 399.9	35 - 650.0	d_N + 12.2	9.5	0.8	0.60	0.35	0.25	5.33
REL50	400 - 649.9	125 - 999.9	d_N + 15.9	12.2	0.8	0.70	0.50	0.30	7.00
REL60	650 - 999.9	400 - 999.9	d_N + 19.0	15.0	0.8	1.00	0.70	0.60	8.40
REL6X	≥ 1000	1000 - 2600	d_N + 19.0	15.0	0.8	1.00	0.70	0.60	8.40

* At pressures **> 40 MPa** use diameter tolerance H8/f8 (bore/rod) in area behind the seal; or consult TSS for alternative profiles.
TSS Slydring®/Wear Rings are not applicable at very small radial clerance; consult the Slydring® catalog.
For minimum diameter installation in closed grooves see Table VII page 13

Ordering example

Turcon® VL Seal® complete with O-Ring, standard application:

Series: REL40 (from Table XL).
Rod diameter: d_N = 250.0 mm
TSS Part No.: REL402500 (from Table XLI).

Select the material from Table XXXIX.
The corresponding code numbers are appended to the TSS Part No.
Together these form the TSS Article Number.

The TSS Article Number for all intermediate sizes not shown in Table XLI can be determined following the example below.

TSS Article No. REL4 0 2500 - M12 N

- Series No. — REL4
- Type (Standard)** — 0
- Rod diameter x 10* — 2500
- Quality Index (Standard) — -
- Material Code (Seal Ring) — M12
- Material Code (O-Ring) — N

* For diameters ≥ 1000.0 mm multiply only by factor 1.
Example: REL6X for diameter 1200.0 mm.
TSS Article No.: REL6X**1200** - M12N.

** Use suffix "N" for seals with radial notches, for diameter dN < 1000 mm.

(Radial notches for diameter dN ≥1000 mm special part number is required).

Table XLI Installation dimensions - Part No.

Rod	Groove Dia.	Groove Width	TSS Part No.	O-Ring Sizes
d_N f8/h9	D_1 H9	L_1 +0.2		
6.0	**10.5**	**3.6**	**REL100060**	**7.10 x 1.80**
8.0	**12.5**	**3.6**	**REL100080**	**9.25 x 1.78**
9.0	13.5	3.6	REL100090	10.60 x 1.80
10.0	**14.5**	**3.6**	**REL100100**	**11.20 x 1.80**
12.0	**16.5**	**3.6**	**REL100120**	**13.20 x 1.80**
12.7	17.2	3.6	REL100127	14.00 x 1.78
14.0	**18.5**	**3.6**	**REL100140**	**15.60 x 1.78**
15.0	19.5	3.6	REL100150	17.17 x 1.78
16.0	**20.5**	**3.6**	**REL100160**	**17.17 x 1.78**
18.0	**22.5**	**3.6**	**REL100180**	**19.00 x 1.80**
19.0	25.2	4.8	REL200190	20.29 x 2.62
20.0	**24.5**	**3.6**	**REL100200**	**21.95 x 1.78**
20.0	**26.2**	**4.8**	**REL200200**	**21.89 x 2.62**
22.0	**26.5**	**3.6**	**REL100220**	**23.52 x 1.78**
22.0	**28.2**	**4.8**	**REL200220**	**23.47 x 2.62**
24.0	28.5	3.6	REL100240	25.12 x 1.78
25.0	29.5	3.6	REL100250	26.70 x 1.78
25.0	31.2	4.8	REL200250	26.64 x 2.62
25.4	29.9	3.6	REL100254	26.70 x 1.78
25.4	31.6	4.8	REL200254	26.64 x 2.62
26.0	30.5	3.6	REL100260	28.30 x 1.78

Rod	Groove Dia.	Groove Width	TSS Part No.	O-Ring Sizes
d_N f8/h9	D_1 H9	L_1 +0.2		
26.0	32.2	4.8	REL200260	28.24 x 2.62
28.0	32.5	3.6	REL100280	29.87 x 1.78
28.0	**34.2**	**4.8**	**REL200280**	**29.82 x 2.62**
30.0	34.5	3.6	REL100300	31.47 x 1.78
30.0	36.2	4.8	REL200300	31.42 x 2.62
32.0	36.5	3.6	REL100320	33.05 x 1.78
32.0	**38.2**	**4.8**	**REL200320**	**34.59 x 2.62**
35.0	39.5	3.6	REL100350	37.82 x 1.78
35.0	41.2	4.8	REL200350	36.17 x 2.62
36.0	40.5	3.6	REL100360	37.82 x 1.78
36.0	**42.2**	**4.8**	**REL200360**	**37.77 x 2.62**
37.0	41.5	3.6	REL100370	37.82 x 1.78
37.0	43.2	4.8	REL200370	39.34 x 2.62
38.0	44.2	4.8	REL200380	39.34 x 2.62
38.0	47.4	7.1	REL300380	40.87 x 3.53
40.0	**46.2**	**4.8**	**REL200400**	**42.52 x 2.62**
40.0	**49.4**	**7.1**	**REL300400**	**44.04 x 3.53**
42.0	48.2	4.8	REL200420	44.12 x 2.62
42.0	51.4	7.1	REL300420	44.04 x 3.53
43.0	49.2	4.8	REL200430	44.12 x 2.62
45.0	**51.2**	**4.8**	**REL200450**	**47.29 x 2.62**

Rod d_N f8/h9	Groove Dia. D_1 H9	Groove Width L_1 +0.2	TSS Part No.	O-Ring Sizes
45.0	**54.4**	**7.1**	**REL300450**	**47.22 x 3.53**
48.0	54.2	4.8	REL200480	50.47 x 2.62
48.0	57.4	7.1	REL300480	50.39 x 3.53
50.0	**56.2**	**4.8**	**REL200500**	**52.07 x 2.62**
50.0	**59.4**	**7.1**	**REL300500**	**53.57 x 3.53**
50.8	57.0	4.8	REL200508	52.07 x 2.62
50.8	60.2	7.1	REL300508	53.57 x 3.53
52.0	58.2	4.8	REL200520	53.64 x 2.62
52.0	61.4	7.1	REL300520	56.74 x 3.53
54.0	63.4	7.1	REL300540	56.74 x 3.53
55.0	61.2	4.8	REL200550	56.82 x 2.62
55.0	64.4	7.1	REL300550	59.92 x 3.53
56.0	**62.2**	**4.8**	**REL200560**	**58.42 x 2.62**
56.0	**65.4**	**7.1**	**REL300560**	**59.92 x 3.53**
56.0	68.2	9.5	REL400560	59.69 x 5.33
60.0	66.2	4.8	REL200600	61.60 x 2.62
60.0	69.4	7.1	REL300600	63.09 x 3.53
63.0	**69.2**	**4.8**	**REL200630**	**64.77 x 2.62**
63.0	**72.4**	**7.1**	**REL300630**	**66.27 x 3.53**
65.0	71.2	4.8	REL200650	66.34 x 2.62
65.0	74.4	7.1	REL300650	69.44 x 3.53
70.0	76.2	4.8	REL200700	71.12 x 2.62
70.0	**79.4**	**7.1**	**REL300700**	**72.62 x 3.53**
70.0	82.2	9.5	REL400700	75.57 x 5.33
72.0	78.2	4.8	REL200720	75.87 x 2.62
75.0	81.2	4.8	REL200750	76.63 x 2.62
75.0	84.4	7.1	REL300750	78.97 x 3.53
76.2	85.6	7.1	REL300762	78.97 x 3.53
80.0	86.2	4.8	REL200800	82.22 x 2.62
80.0	**89.4**	**7.1**	**REL300800**	**82.14 x 3.53**
80.0	92.2	9.5	REL400800	85.09 x 5.33
85.0	91.2	4.8	REL200850	88.57 x 2.62
85.0	94.4	7.1	REL300850	88.49 x 3.53
85.0	97.2	9.5	REL400850	88.27 x 5.33
90.0	96.2	4.8	REL200900	94.92 x 2.62
90.0	**99.4**	**7.1**	**REL300900**	**94.84 x 3.53**

Rod d_N f8/h9	Groove Dia. D_1 H9	Groove Width L_1 +0.2	TSS Part No.	O-Ring Sizes
90.0	102.2	9.5	REL400900	94.62 x 5.33
95.0	101.2	4.8	REL200950	96.63 x 2.62
95.0	104.4	7.1	REL300950	98.02 x 3.53
100.0	106.2	4.8	REL201000	101.27 x 2.62
100.0	**109.4**	**7.1**	**REL301000**	**104.37 x 3.53**
100.0	112.2	9.5	REL401000	104.14 x 5.33
101.6	111.0	7.1	REL301016	104.37 x 3.53
105.0	114.4	7.1	REL301050	107.54 x 3.53
105.0	117.2	9.5	REL401050	110.49 x 5.33
110.0	116.2	4.8	REL201100	113.97 x 2.62
110.0	**119.4**	**7.1**	**REL301100**	**113.89 x 3.53**
110.0	122.2	9.5	REL401100	113.67 x 5.33
115.0	124.4	7.1	REL301150	117.07 x 3.53
120.0	129.4	7.1	REL301200	123.42 x 3.53
120.0	132.2	9.5	REL401200	123.19 x 5.33
125.0	**134.4**	**7.1**	**REL301250**	**129.77 x 3.53**
125.0	137.2	9.5	REL401250	129.54 x 5.33
127.0	136.4	7.1	REL301270	129.77 x 3.53
130.0	139.4	7.1	REL301300	132.94 x 3.53
130.0	142.2	9.5	REL401300	132.72 x 5.33
135.0	141.2	4.8	REL201350	139.37 x 2.62
135.0	144.4	7.1	REL301350	139.29 x 3.53
140.0	146.2	4.8	REL201400	145.72 x 2.62
140.0	**149.4**	**7.1**	**REL301400**	**142.47 x 3.53**
140.0	152.2	9.5	REL401400	145.42 x 5.33
145.0	154.4	7.1	REL301450	148.82 x 3.53
145.0	157.2	9.5	REL401450	148.49 x 5.33
150.0	159.4	7.1	REL301500	158.34 x 3.53
150.0	162.2	9.5	REL401500	158.12 x 5.33
155.0	164.4	7.1	REL301550	158.34 x 3.53
160.0	**169.4**	**7.1**	**REL301600**	**164.69 x 3.53**
160.0	**172.2**	**9.5**	**REL401600**	**164.47 x 5.33**
165.0	174.4	7.1	REL301650	171.04 x 3.53
170.0	179.4	7.1	REL301700	177.39 x 3.53
170.0	182.2	9.5	REL401700	177.17 x 5.33
175.0	184.4	7.1	REL301750	177.39 x 3.53

Rod d_N f8/h9	Groove Dia. D_1 H9	Groove Width L_1 +0.2	TSS Part No.	O-Ring Sizes
180.0	**189.4**	**7.1**	**REL301800**	**183.74 x 3.53**
180.0	**192.2**	**9.5**	**REL401800**	**183.52 x 5.33**
185.0	194.4	7.1	REL301850	190.09 x 3.53
185.0	197.2	9.5	REL401850	189.87 x 5.33
190.0	199.4	7.1	REL301900	196.44 x 3.53
190.0	202.2	9.5	REL401900	196.22 x 5.33
195.0	204.4	7.1	REL301950	202.79 x 3.53
200.0	209.4	7.1	REL302000	202.79 x 3.53
200.0	**212.2**	**9.5**	**REL402000**	**202.57 x 5.33**
205.0	217.2	9.5	REL402050	208.92 x 5.33
210.0	222.2	9.5	REL402100	215.27 x 5.33
215.0	227.2	9.5	REL402150	221.62 x 5.33
220.0	**232.2**	**9.5**	**REL402200**	**227.97 x 5.33**
225.0	237.2	9.5	REL402250	227.97 x 5.33
230.0	239.4	7.1	REL302300	234.54 x 3.53
230.0	242.2	9.5	REL402300	234.32 x 5.33
235.0	247.2	9.5	REL402350	240.67 x 5.33
240.0	252.2	9.5	REL402400	247.02 x 5.33
245.0	257.2	9.5	REL402450	253.37 x 5.33
250.0	**262.2**	**9.5**	**REL402500**	**253.37 x 5.33**
270.0	282.2	9.5	REL402700	278.77 x 5.33
275.0	287.2	9.5	REL402750	278.77 x 5.33
280.0	**292.2**	**9.5**	**REL402800**	**291.47 x 5.33**
285.0	297.2	9.5	REL402850	291.47 x 5.33
290.0	302.2	9.5	REL402900	304.17 x 5.33
295.0	307.2	9.5	REL402950	304.17 x 5.33
300.0	312.2	9.5	REL403000	304.17 x 5.33
310.0	322.2	9.5	REL403100	312.87 x 5.33
320.0	**332.2**	**9.5**	**REL403200**	**329.57 x 5.33**
330.0	342.2	9.5	REL403300	332.87 x 5.33
340.0	352.2	9.5	REL403400	354.97 x 5.33
350.0	362.2	9.5	REL403500	354.97 x 5.33
360.0	**372.2**	**9.5**	**REL403600**	**365.00 x 5.30**
370.0	382.2	9.5	REL403700	380.37 x 5.33
380.0	392.2	9.5	REL403800	382.87 x 5.33
390.0	402.2	9.5	REL403900	405.26 x 5.33

Rod d_N f8/h9	Groove Dia. D_1 H9	Groove Width L_1 +0.2	TSS Part No.	O-Ring Sizes
400.0	412.2	9.5	REL404000	405.26 x 5.33
400.0	415.9	12.2	REL504000	405.26 x 7.00
410.0	422.2	9.5	REL404100	412.87 x 5.33
420.0	432.2	9.5	REL404200	430.66 x 5.33
420.0	435.9	12.2	REL504200	430.66 x 7.00
430.0	442.2	9.5	REL404300	432.87 x 5.33
440.0	452.2	9.5	REL404400	456.06 x 5.33
450.0	462.2	9.5	REL404500	456.06 x 5.33
450.0	465.9	12.2	REL504500	456.06 x 7.00
460.0	472.2	9.5	REL404600	481.38 x 5.33
470.0	482.2	9.5	REL404700	481.38 x 5.33
480.0	492.2	9.5	REL404800	482.87 x 5.33
480.0	495.9	12.2	REL504800	494.16 x 7.00
490.0	502.2	9.5	REL404900	506.78 x 5.33
500.0	512.2	9.5	REL405000	506.78 x 5.33
500.0	515.9	12.2	REL505000	506.86 x 7.00
510.0	522.2	9.5	REL405100	532.18 x 5.33
520.0	532.2	9.5	REL405200	532.18 x 5.33
520.0	535.9	12.2	REL505200	532.26 x 7.00
530.0	542.2	9.5	REL405300	532.87 x 5.33
540.0	552.2	9.5	REL405400	557.58 x 5.33
550.0	562.2	9.5	REL405500	557.58 x 5.33
550.0	565.9	12.2	REL505500	557.66 x 7.00
560.0	572.2	9.5	REL405600	582.68 x 5.33
570.0	582.2	9.5	REL405700	582.68 x 5.33
580.0	592.2	9.5	REL405800	582.68 x 5.33
580.0	595.9	12.2	REL505800	608.08 x 7.00
590.0	602.2	9.5	REL405900	608.08 x 5.33
600.0	612.2	9.5	REL406000	608.08 x 5.33
600.0	615.9	12.2	REL506000	608.08 x 7.00
610.0	622.2	9.5	REL406100	633.48 x 5.33
620.0	632.2	9.5	REL406200	633.48 x 5.33
620.0	635.9	12.2	REL506200	633.48 x 7.00
630.0	642.2	9.5	REL406300	633.48 x 5.33
640.0	652.2	9.5	REL406400	658.88 x 5.33
650.0	665.9	12.2	REL506500	658.88 x 7.00

Rod	Groove Dia.	Groove Width	TSS Part No.	O-Ring Sizes
d_N f8/h9	D_1 H9	L_1 +0.2		
650.0	669.0	15.0	REL606500	654 x 8.40
660.0	675.9	12.2	REL506600	664 x 7.00
660.0	679.0	15.0	REL606600	664 x 8.40
680.0	695.9	12.2	REL506800	684 x 7.00
680.0	699.0	15.0	REL606800	684 x 8.40
700.0	715.9	12.2	REL507000	704 x 7.00
700.0	719.0	15.0	REL607000	704 x 8.40
710.0	725.9	12.2	REL507100	714 x 7.00
710.0	729.0	15.0	REL607100	714 x 8.40
730.0	745.9	12.2	REL507300	734 x 7.00
730.0	749.0	15.0	REL607300	734 x 8.40
760.0	775.9	12.2	REL507600	764 x 7.00
760.0	779.0	15.0	REL607600	764 x 8.40
780.0	795.9	12.2	REL507800	784 x 7.00
780.0	799.0	15.0	REL607800	784 x 8.40
790.0	805.9	12.2	REL507900	794 x 7.00
790.0	809.0	15.0	REL607900	794 x 8.40
800.0	815.9	12.2	REL508000	804 x 7.00
800.0	819.0	15.0	REL608000	804 x 8.40
810.0	825.9	12.2	REL508100	814 x 7.00
810.0	829.0	15.0	REL608100	814 x 8.40
820.0	835.9	12.2	REL508200	824 x 7.00
820.0	839.0	15.0	REL608200	824 x 8.40
830.0	845.9	12.2	REL508300	834 x 7.00
830.0	849.0	15.0	REL608300	834 x 8.40
850.0	865.9	12.2	REL508500	854 x 7.00
850.0	869.0	15.0	REL608500	854 x 8.40
870.0	885.9	12.2	REL508700	874 x 7.00
870.0	889.0	15.0	REL608700	874 x 8.40
880.0	895.9	12.2	REL508800	884 x 7.00
880.0	899.0	15.0	REL608800	884 x 8.40
890.0	905.9	12.2	REL508900	894 x 7.00
890.0	909.0	15.0	REL608900	894 x 8.40
930.0	945.9	12.2	REL509300	934 x 7.00
930.0	949.0	15.0	REL609300	934 x 8.40
1000.0	1019.0	15.0	REL6X1000	1004 x 8.40

Rod	Groove Dia.	Groove Width	TSS Part No.	O-Ring Sizes
d_N f8/h9	D_1 H9	L_1 +0.2		
1050.0	1069.0	15.0	REL6X1050	1054 x 8.40
1100.0	1119.0	15.0	REL6X1100	1104 x 8.40
1200.0	1219.0	15.0	REL6X1200	1204 x 8.40
1500.0	1519.0	15.0	REL6X1500	1504 x 8.40
1600.0	1619.0	15.0	REL6X1600	1604 x 8.40
2000.0	2019.0	15.0	REL6X2000	2004 x 8.40
2600.0	2619.0	15.0	REL6X2600	2604 x 8.40

The rod diameters in **bold** type are in accordance with the recommendations of ISO 3320.
Other dimensions and all intermediate sizes up to 2600 mm diameter including imperial (inch) sizes can be supplied.

Turcon® Glyd Ring®

Double Acting

Rubber Energized Plastic Faced Seal

Material:
Turcon® and Zurcon®

■ Turcon® Glyd Ring®

Description

Successfully used for decades, the Turcon® Glyd Ring® is a very effective and reliable low frictional seal. It is particularly suitable as a rod seal in both high and low pressure systems.

The double acting Turcon® Glyd Ring® is a combination of a Turcon® based slipper seal and an energising O-Ring. It is produced with an interference fit which together with the squeeze of the O-Ring ensures a good sealing effect even at low pressure. At higher system pressures, the O-Ring is energised by the fluid, pushing the Turcon® Glyd Ring® against the sealing face with increased force.

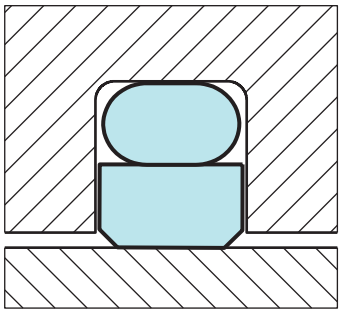

Figure 65 Turcon® Glyd Ring®

The geometry of the Turcon® Glyd Ring® ensures a good static sealing and allows the lubricating hydrodynamic oil film to be build under the seal in reciprocating applications.

Notches

To assure that a rapid energising of the seal takes place at sudden changes of pressure and direction of motion, the seal can be delivered with radial "notches" on both sides.

Ordering of Glyd Ring® with "notches" see page 183.

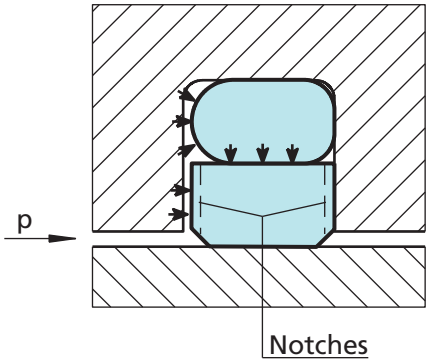

Figure 66 Turcon® Glyd Ring®

Advantages

- No stick-slip effect when starting for smooth operation
- Minimum static and dynamic friction coefficient for a minimum energy loss and operating temperature
- Suitable for non lubricating fluids depending on seal material for optimum design flexibility
- High wear resistance ensures long service life
- Installation grooves acc. to ISO 7425/2
- No adhesive effect to the mating surface during long period of inactivity or storage
- Suitable for most hydraulic fluids in relation with most modern hardware materials and surface finish depending on material selected.
- Suitable for new environmentally safe hydraulic fluids
- Available for all rod diameters up to 2,600 mm.

Applications examples

Over several decades the Turcon® Glyd Ring® has been successfully implemented in a lot of applications as double acting Rod seals of hydraulic components such as:

- Injection moulding machines
- Machine tools
- Presses
- Handling machinery
- Valve stems
- Valves for hydraulic & pneumatic circuits.
- Servo equipment
- Hydraulic motors
- Brake booster
- Jacks.

Technical Data

Operating conditions:

The Turcon® Glyd Ring® is recommended for reciprocating (with a length of stroke at least twice the groove width) and helical movements.

Pressure:	Up to 60 MPa
Speed:	Up to 15 m/s
Frequency:	Up to 5 Hz.
Temperature:	-45 °C to +200 °C (depending on O-Ring Material)
Media:	Mineral oil based hydraulic fluids, barely flammable hydraulic fluids, environmentally safe hydraulic fluids (biological degradable oils), phosphate ester, water, air and others. Depending on the O-Ring material compatibility.
Clearance:	the maximum permissible radial clearance Smax is shown in the Table XLIII, as a function of the operating pressure and functional diameter.

Important Note:
The above data are maximum values and cannot be used at the same time. e.g. the maximum operating speed depends on material type, pressure, temperature and gap value.
Temperature range also dependent on medium.

Materials

The following material combinations have proven effective for hydraulic applications:

All round material for hydraulic applications with reciprocating, short stroke or helical movements in mineral oils, flame retardant hydraulic fluids HFC, phosphate ester, bio-oils or fluids having less satisfactory lubricating properties:

Turcon® Glyd Ring®:	Turcon® M12	
O-Ring:	NBR, 70 Shore A	N
	FKM, 70 Shore A	V
Set code:	M12N or M12V	

For medium to heavy applications with reciprocating movements in mineral oils and other media with good lubrication:

Turcon® Glyd Ring®:	Turcon® T46	
O-Ring:	NBR, 70 Shore A	N
	FKM, 70 Shore A	V
Set code:	T46N or T46V	

For specific applications, all Turcon® materials are available.

Other viable material combinations are listed in Table XLII.

Table XLII Turcon® and Zurcon® Materials for Glyd Ring®

Material, Applications, Properties	Code	O-Ring Material Shore A	Code	O-Ring Operating Temp.* °C	Mating Surface Material	MPa max. Dyna-mic
Turcon® M12 First material choice for seals in linear motion Overall improved properties For new constructions and updating For all commonly applied hydraulic fluids including fluids with low lubrication performance Lowest friction and best sliding properties Lowest wear on seals Improved absorption of abrasive contaminanants No wear or abrasion of counte surface Mineral fibre and Additives filled Colour: Dark grey	M12	NBR- 70	N	-30 to +100	Steel Steel hardened Steel chrome plated (rod) Steel plated (rod) Cast iron Stainless steel Titanium	50
		NBR- 70 Low temp.	T	-45 to +80		
		FKM- 70	V	-10 to +200		
Turcon® T05 For lubricating fluids Also for gas service Very low friction Very good sliding and sealing properties Colour: Turquoise	T05	NBR- 70	N	-30 to +100	Steel, hardened Steel chrome plated (rod)	20
		NBR- 70 Low temp.	T	-45 to +80		
		FKM- 70	V	-10 to +200		
Turcon® T08 For lubricating fluids and linear motion Very high compressive strength and good extrusion resistance Hard counter surfaces is recommended Bronze filled Colour: Light to dark brown which may have variations in shading	T08	NBR- 70	N	-30 to +100	Steel, hardened Steel chrome plated (rod) Cast iron	60
		NBR- 70 Low temp.	T	-45 to +80		
		FKM- 70	V	-10 to +200		
Turcon® T10 For hydraulic and pneumatic For lubricating and non-lubricating fluids High extrusion resistance Good chemical resistance Not for electrically conducting fluids BAM tested. Carbon, graphite filled Colour: Black	T10	NBR- 70	N	-30 to +100	Steel Steel hardened Steel chrome plated (rod) Stainless steel	40
		NBR- 70 Low temp.	T	-45 to +80		
		FKM- 70	V	-10 to +200		
		EPDM- 70	E**	-45 to +145		
Turcon® T29 For all lubricating and non-lubricating fluids Good extrusion resistance Surface texture is not suitable for gas sealing Not for electrically conducting fluids Carbon fibre filled Colour: Grey	T29	NBR- 70	N	-30 to +100	Steel Steel hardened Steel chrome plated (rod) Cast iron Stainless steel	30
		NBR- 70 Low temp.	T	-45 to +80		
		FKM- 70	V	-10 to +200		
		EPDM- 70	E**	-45 to +145		
Turcon® T40 For all lubricating and non-lubricating fluids **Water hydraulics** Surface texture not suitable for gas sealing Carbon fibre filled Colour: Grey	T40	NBR- 70	N	-30 to +100	Steel Steel hardened Steel chrome plated (rod) Cast iron Stainless steel Aluminium	25
		NBR- 70 Low temp.	T	-45 to +80		
		FKM- 70	V	-10 to +200		
		EPDM- 70	E**	-45 to +145		
Turcon® T46 For lubricated hydraulics in linear motion High compressive strength High extrusion resistance Very good sliding and wear properties BAM tested Bronze filled Colour: Light to dark brown, which may have variations in shading	T46	NBR- 70	N	-30 to +100	Steel hardened Steel chrome plated (rod) Cast iron	50
		NBR- 70 Low temp	T	-45 to +80		
		FKM- 70	V	-10 to +200		

Material, Applications, Properties	Code	O-Ring Material Shore A	Code	O-Ring Operating Temp.* °C	Mating Surface Material	MPa max. Dyna-mic
Zurcon® Z51*** For mineral oil based fluids Very **high abrasion and extrusion resistance** For counter surface with rougher surface finish Limited chemical resistance. Max. working termperature 110 °C Cast polyurethane Colour: Yellow to light-brown	Z51	NBR- 70	N	-30 to +100	Steel Steel hardened Steel chrome plated (rod) Cast iron Ceramic coating Stainless steel	60
		NBR- 70 Low temp.	T	-45 to +80		
Zurcon® Z80 For lubricating and non-lubricating fluids Water based fluids, air and gases Dry air pneumatics High abrasion and extrusion resistance For service in abrasive conditions and media with particles Good chemical resistance Limited temperature capability (-60 to +80 °C) UHMWPE (Ultra High Molecular Weight Polyethylene) Colour: White to off-white	Z80	NBR -70	N	-30 to (+100)	Steel Steel hardened Steel, chromeplated Stainless steel Aluminium Ceramic coating	35
		NBR- 70 Low temp.	T	-45 to +80		
		EPDM- 70	E**	-45 to (+145)		

* The O-Ring Operation Temperature is only valid in mineral hydraulic oil. BAM: Tested by "Bundesanstalt Materialprüfung, Germany".
Highlighted materials are standard. ** Material not suitable for mineral oils. *** max. Ø 2200 mm

■ Installation Recommendation

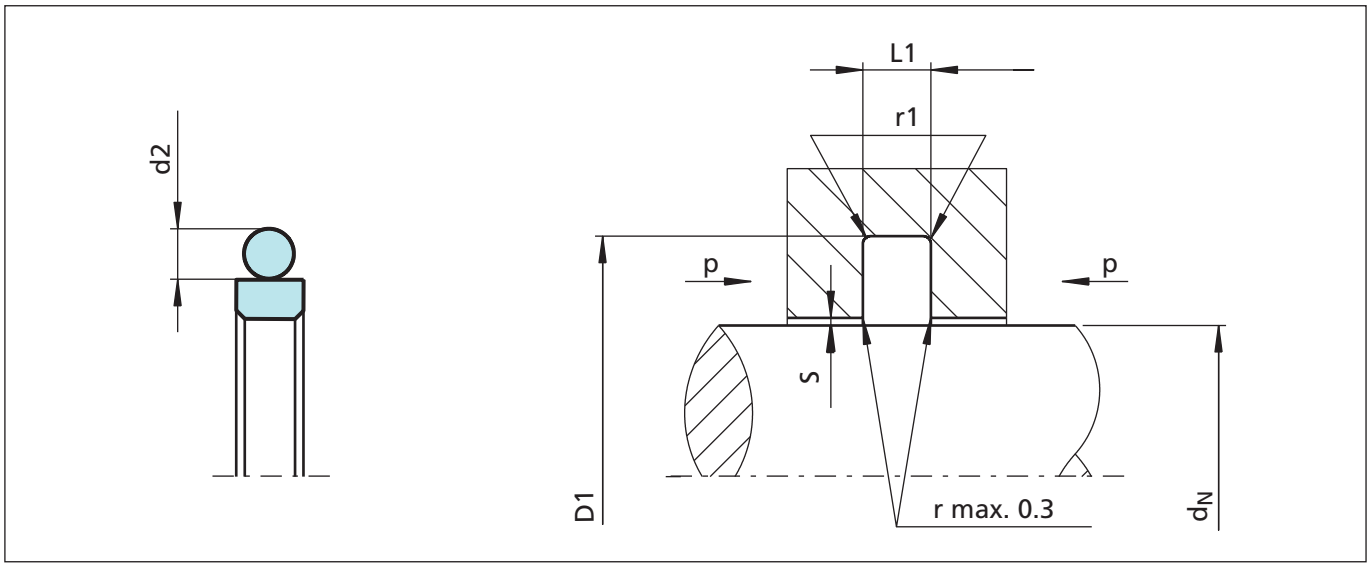

Figure 67 Installation drawing

Table XLIII Installation dimensions – Standard recommendations

Rod Diameter d_N f8/h9			Groove Diameter*	Groove Width	Radius	Radial Clearance S max. **			O-Ring Cross-Section
Series No. RG 43	**Series No. RG 45**	**Series No. RG 41**							
Standard Application	**Light Application**	**Heavy Duty Application**	**D1** H9	**L1** +0.2	**r1**	**10 MPa**	**20 MPa**	**40 MPa**	**d_2**
3 - 7.9	8 - 18.9	-	d_N + 4.9	2.2	0.4	0.30	0.20	0.15	1.78
8 - 18.9	19 - 37.9	-	d_N + 7.3	3.2	0.6	0.40	0.25	0.15	2.62
19 - 37.9	38 - 199.9	8 - 18.9	d_N + 10.7	4.2	1.0	0.40	0.25	0.20	3.53
38 - 199.9	200 - 255.9	19 - 37.9	d_N + 15.1	6.3	1.3	0.50	0.30	0.20	5.33
200 - 255.9	256 - 649.9	38 - 199.9	d_N + 20.5	8.1	1.8	0.60	0.35	0.25	7.00
256 - 649.9	650 - 999.9	200 - 255.9	d_N + 24.0	8.1	1.8	0.60	0.35	0.25	7.00
650 - 999.9	≥ 1000	256 - 649.9	d_N + 27.3	9.5	2.5	0.70	0.50	0.30	8.40
≥ 1000***	-	650 - 999.9	d_N + 38.0	13.8	3.0	1.00	0.70	0.60	12.00

* Installation with groove dimensions to ISO 7425/2 is also recommendable.
** At pressures > **40 MPa** use diameter tolerance H8/f8 (bore/rod) in area of the seal or consult TSS for alternative material or profiles TSS Slydring®/Wear Rings are not applicable at very small radial clearance; consult the Slydring® catalog.
*** O-Rings with 12 mm cross section are delivered as special profilring.

Ordering example

Turcon® Glyd Ring®, complete with O-Ring, standard application, Series RG43 (from Table XLIII).

Rod diameter: d_N = 80.0 mm
TSS Part No.: RG4300800 (from Table XLIV)

Select the material from Table XLII. The corresponding code numbers are appended to the TSS Part No. (from Table XLIV).
Together these form the TSS Article Number. The TSS Article Number for all intermediate sizes not shown in Table XLIV can be determined following the example below.

**** For diameters $d_N \geq$ 1000.0 mm multiply only by factor 1.
Example: RG43 for diamater d_N 1200.0 mm.
TSS Article No.: RG43**X1200** - M12N

TSS Article No. RG43 0 0800 - M12 N

- TSS Series No. (RG43)
- Type (Standard)***** (0)
- Rod diameter x 10**** (0800)
- Quality Index (Standard) (-)
- Material code (Seal ring) (M12)
- Material code (O-Ring) (N)

***** Ordering Glyd Ring® with radial notches, please use suffix "N" in the fifth character, for diameter d_N <1000 mm.

Table XLIV Installation dimensions / TSS Part No.

Rod Diameter	Groove Diameter	Groove Width	TSS Part No.	O-Ring Size
d_N f8/h9	D_1 H9	L_1 +0.2		
3.0	7.9	2.2	RG4300030	4.47 x 1.78
4.0	**8.9**	**2.2**	**RG4300040**	**5.6 x 1.8**
5.0	**9.9**	**2.2**	**RG4300050**	**6.7 x 1.8**
6.0	**10.9**	**2.2**	**RG4300060**	**7.65 x 1.78**
7.0	11.9	2.2	RG4300070	8.75 x 1.8
8.0	**12.9**	**2.2**	**RG4500080**	**9.5 x 1.8**
8.0	**15.3**	**3.2**	**RG4300080**	**10.77 x 2.62**
10.0	**14.9**	**2.2**	**RG4500100**	**11.8 x 1.8**
10.0	**17.3**	**3.2**	**RG4300100**	**12.37 x 2.62**
12.0	**16.9**	**2.2**	**RG4500120**	**14.0 x 1.78**
12.0	**19.3**	**3.2**	**RG4300120**	**13.94 x 2.62**
14.0	**18.9**	**2.2**	**RG4500140**	**15.6 x 1.78**
14.0	**21.3**	**3.2**	**RG4300140**	**17.12 x 2.62**
15.0	19.9	2.2	RG4500150	17.17 x 1.78
15.0	22.3	3.2	RG4300150	17.12 x 2.62
16.0	20.9	2.2	RG4500160	17.17 x 1.78
16.0	**23.3**	**3.2**	**RG4300160**	**18.72 x 2.62**
18.0	22.9	2.2	RG4500180	20.35 x 1.78

The rod diameters in **bold** type are in accordance with the recommendations of ISO 3320.
Other dimensions and all intermediate sizes up to 2.600 mm diameter including imperial (inch) sizes can be supplied.
All O-Rings with 12 mm cross section are delivered as special profilring.

Rod Diameter	Groove Diameter	Groove Width	TSS Part No.	O-Ring Size
d_N f8/h9	D_1 H9	L_1 +0.2		
18.0	**25.3**	**3.2**	**RG4300180**	**20.29 x 2.62**
19.0	29.7	4.2	RG4300190	23.39 x 3.53
20.0	**27.3**	**3.2**	**RG4500200**	**21.89 x 2.62**
20.0	**30.7**	**4.2**	**RG4300200**	**23.39 x 3.53**
22.0	**29.3**	**3.2**	**RG4500220**	**25.07 x 2.62**
22.0	**32.7**	**4.2**	**RG4300220**	**26.57 x 3.53**
24.0	31.3	3.2	RG4500240	26.64 x 2.62
25.0	**32.3**	**3.2**	**RG4500250**	**28.24 x 2.62**
25.0	**35.7**	**4.2**	**RG4300250**	**29.74 x 3.53**
25.4	32.7	3.2	RG4500254	28.24 x 2.62
25.4	36.1	4.2	RG4300254	29.74 x 3.53
26.0	33.3	3.2	RG4500260	28.24 x 2.62
26.0	36.7	4.2	RG4300260	29.74 x 3.53
27.0	34.3	3.2	RG4500270	29.82 x 2.62
28.0	35.3	3.2	RG4500280	29.82 x 2.62
28.0	**38.7**	**4.2**	**RG4300280**	**32.92 x 3.53**
28.575	35.875	3.2	RG4500286	31.42 x 2.62
29.0	36.3	3.2	RG4500290	31.42 x 2.62
30.0	37.3	3.2	RG4500300	32.99 x 2.62
30.0	40.7	4.2	RG4300300	34.52 x 3.53
32.0	39.3	3.2	RG4500320	34.59 x 2.62
32.0	**42.7**	**4.2**	**RG4300320**	**36.09 x 3.53**
35.0	42.3	3.2	RG4500350	37.77 x 2.62
35.0	45.7	4.2	RG4300350	37.69 x 3.53
36.0	43.3	3.2	RG4500360	39.34 x 2.62
36.0	**46.7**	**4.2**	**RG4300360**	**40.87 x 3.53**
38.0	48.7	4.2	RG4500380	40.87 x 3.53
38.0	53.1	6.3	RG4300380	43.82 x 5.33
39.0	49.7	4.2	RG4500390	44.04 x 3.53
40.0	**50.7**	**4.2**	**RG4500400**	**44.04 x 3.53**
40.0	**55.1**	**6.3**	**RG4300400**	**43.82 x 5.33**
42.0	52.7	4.2	RG4500420	47.22 x 3.53
42.0	57.1	6.3	RG4300420	46.99 x 5.33
44.0	54.7	4.2	RG4500440	47.22 x 3.53
44.45	59.55	6.3	RG4300444	50.17 x 5.33
45.0	**55.7**	**4.2**	**RG4500450**	**50.39 x 3.53**

The rod diameters in **bold** type are in accordance with the recommendations of ISO 3320.
Other dimensions and all intermediate sizes up to 2.600 mm diameter including imperial (inch) sizes can be supplied.
All O-Rings with 12 mm cross section are delivered as special profilring.

Rod Diameter	Groove Diameter	Groove Width	TSS Part No.	O-Ring Size
d_N f8/h9	D_1 H9	L_1 +0.2		
45.0	**60.1**	**6.3**	**RG4300450**	**50.17 x 5.33**
48.0	58.7	4.2	RG4500480	51.5 x 3.55
48.0	63.1	6.3	RG4300480	53.34 x 5.33
50.0	**60.7**	**4.2**	**RG4500500**	**53.57 x 3.53**
50.0	**65.1**	**6.3**	**RG4300500**	**56.52 x 5.33**
50.8	61.5	4.2	RG4500508	53.57 x 3.53
50.8	65.9	6.3	RG4300508	56.52 x 5.33
52.0	62.7	4.2	RG4500520	56.74 x 3.53
52.0	67.1	6.3	RG4300520	56.52 x 5.33
54.0	69.1	6.3	RG4300540	59.69 x 5.33
55.0	65.7	4.2	RG4500550	59.92 x 3.53
55.0	70.1	6.3	RG4300550	59.69 x 5.33
56.0	**66.7**	**4.2**	**RG4500560**	**59.92 x 3.53**
56.0	**71.1**	**6.3**	**RG4300560**	**62.87 x 5.33**
58.0	73.1	6.3	RG4300580	62.87 x 5.33
60.0	70.7	4.2	RG4500600	63.09 x 3.53
60.0	75.1	6.3	RG4300600	66.04 x 5.33
63.0	73.7	4.2	RG4500630	66.27 x 3.53
63.0	**78.1**	**6.3**	**RG4300630**	**69.22 x 5.33**
65.0	80.1	6.3	RG4300650	69.22 x 5.33
67.0	77.7	4.2	RG4500670	72.62 x 3.53
70.0	80.7	4.2	RG4500700	75.79 x 3.53
70.0	**85.1**	**6.3**	**RG4300700**	**75.57 x 5.33**
72.0	82.7	4.2	RG4500720	75.79 x 3.53
75.0	85.7	4.2	RG4500750	78.97 x 3.53
75.0	90.1	6.3	RG4300750	81.92 x 5.33
80.0	90.7	4.2	RG4500800	85.32 x 3.53
80.0	**95.1**	**6.3**	**RG4300800**	**85.09 x 5.33**
83.0	93.7	4.2	RG4500830	88.49 x 3.53
85.0	100.1	6.3	RG4300850	91.44 x 5.33
86.0	96.7	4.2	RG4500860	91.67 x 3.53
90.0	100.7	4.2	RG4500900	94.84 x 3.53
90.0	**105.1**	**6.3**	**RG4300900**	**94.62 x 5.33**
92.0	102.7	4.2	RG4500920	98.02 x 3.53
95.0	105.7	4.2	RG4500950	101.19 x 3.53
95.0	110.1	6.3	RG4300950	100.97 x 5.33

The rod diameters in **bold** type are in accordance with the recommendations of ISO 3320.
Other dimensions and all intermediate sizes up to 2.600 mm diameter including imperial (inch) sizes can be supplied.
All O-Rings with 12 mm cross section are delivered as special profilring.

Rod Diameter	Groove Diameter	Groove Width	TSS Part No.	O-Ring Size
d_N f8/h9	D_1 H9	L_1 +0.2		
100.0	110.7	4.2	RG4501000	104.37 x 3.53
100.0	**115.1**	**6.3**	**RG4301000**	**107.32 x 5.33**
101.6	112.3	4.2	RG4501016	107.54 x 3.53
101.6	116.7	6.3	RG4301016	107.32 x 5.33
104.7	119.8	6.3	RG4301047	110.49 x 5.33
105.0	115.7	4.2	RG4501050	110.72 x 3.53
105.0	120.1	6.3	RG4301050	110.49 x 5.33
110.0	120.7	4.2	RG4501100	113.89 x 3.53
110.0	**125.1**	**6.3**	**RG4301100**	**116.84 x 5.33**
110.0	130.5	8.1	RG4101100	120.02 x 7.00
112.0	127.1	6.3	RG4301120	116.84 x 5.33
115.0	125.7	4.2	RG4501150	120.24 x 3.53
115.0	130.1	6.3	RG4301150	120.02 x 5.33
118.0	133.1	6.3	RG4301180	123.19 x 5.33
120.0	130.7	4.2	RG4501200	123.42 x 3.53
120.0	135.1	6.3	RG4301200	126.37 x 5.33
125.0	135.7	4.2	RG4501250	129.77 x 3.53
125.0	**140.1**	**6.3**	**RG4301250**	129.**54** x 5.33
129.0	139.7	4.2	RG4501290	132.94 x 3.53
130.0	140.7	4.2	RG4501300	136.12 x 3.53
130.0	145.1	6.3	RG4301300	135.89 x 5.33
135.0	145.7	4.2	RG4501350	139.29 x 3.53
135.0	150.1	6.3	RG4301350	142.24 x 5.33
140.0	150.7	4.2	RG4501400	145.64 x 3.53
140.0	**155.1**	**6.3**	**RG4301400**	**145.42 x 5.33**
145.0	155.7	4.2	RG4501450	148.82 x 3.53
145.0	160.1	6.3	RG4301450	151.77 x 5.33
150.0	165.1	6.3	RG4301500	158.12 x 5.33
160.0	**175.1**	**6.3**	**RG4301600**	**164.47 x 5.33**
160.0	**180.5**	**8.1**	**RG4101600**	**170.82 x 7.00**
165.0	180.1	6.3	RG4301650	170.82 x 5.33
170.0	180.7	4.2	RG4501700	177.39 x 3.53
170.0	185.1	6.3	RG4301700	177.17 x 5.33
175.0	190.1	6.3	RG4301750	183.52 x 5.33
180.0	190.7	4.2	RG4501800	183.74 x 3.53
180.0	**195.1**	**6.3**	**RG4301800**	**183.52 x 5.33**

The rod diameters in **bold** type are in accordance with the recommendations of ISO 3320.
Other dimensions and all intermediate sizes up to 2.600 mm diameter including imperial (inch) sizes can be supplied.
All O-Rings with 12 mm cross section are delivered as special profilring.

Rod Diameter	Groove Diameter	Groove Width	TSS Part No.	O-Ring Size
d_N f8/h9	D_1 H9	L_1 +0.2		
180.0	**200.5**	**8.1**	**RG4101800**	**189.87 x 7.00**
190.0	200.7	4.2	RG4501900	196.44 x 3.53
190.0	205.1	6.3	RG4301900	196.22 x 5.33
200.0	215.1	6.3	RG4502000	208.92 x 5.33
200.0	**220.5**	**8.1**	**RG4302000**	**208.92 x 7.00**
205.0	220.1	6.3	RG4502050	208.92 x 5.33
210.0	225.1	6.3	RG4502100	215.27 x 5.33
220.0	235.1	6.3	RG4502200	227.97 x 5.33
220.0	**240.5**	**8.1**	**RG4302200**	**227.97 x 7.00**
230.0	245.1	6.3	RG4502300	234.32 x 5.33
230.0	250.5	8.1	RG4302300	240.67 x 7.00
240.0	255.1	6.3	RG4502400	247.02 x 5.33
240.0	260.5	8.1	RG4302400	253.37 x 7.00
250.0	**270.5**	**8.1**	**RG4302500**	**266.07 x 7.00**
260.0	284.0	8.1	RG4302600	266.07 x 7.00
270.0	290.5	8.1	RG4502700	278.77 x 7.00
270.0	294.0	8.1	RG4302700	278.77 x 7.00
275.0	299.0	8.1	RG4302750	291.47 x 7.00
280.0	300.5	8.1	RG4502800	291.47 x 7.00
280.0	**304.0**	**8.1**	**RG4302800**	**291.47 x 7.00**
290.0	310.5	8.1	RG4502900	304.17 x 7.00
290.0	314.0	8.1	RG4302900	304.17 x 7.00
300.0	324.0	8.1	RG4303000	316.87 x 7.00
310.0	330.5	8.1	RG4503100	316.87 x 7.00
310.0	334.0	8.1	RG4303100	316.87 x 7.00
320.0	**344.0**	**8.1**	**RG4303200**	**329.57 x 7.00**
330.0	354.0	8.1	RG4303300	342.27 x 7.00
340.0	364.0	8.1	RG4303400	354.97 x 7.00
350.0	370.5	8.1	RG4503500	354.97 x 7.00
350.0	374.0	8.1	RG4303500	367.67 x 7.00
360.0	**384.0**	**8.1**	**RG4303600**	**367.67 x 7.00**
370.0	390.5	8.1	RG4503700	380.37 x 7.00
370.0	394.0	8.1	RG4303700	380.37 x 7.00
380.0	404.0	8.1	RG4303800	393.07 x 7.00
390.0	414.0	8.1	RG4303900	405.26 x 7.00
400.0	420.5	8.1	RG4504000	417.96 x 7.00

The rod diameters in **bold** type are in accordance with the recommendations of ISO 3320.
Other dimensions and all intermediate sizes up to 2.600 mm diameter including imperial (inch) sizes can be supplied.
All O-Rings with 12 mm cross section are delivered as special profilring.

Rod Diameter	Groove Diameter	Groove Width	TSS Part No.	O-Ring Size
d_N f8/h9	D_1 H9	L_1 +0.2		
400.0	424.0	8.1	RG4304000	417.96 x 7.00
410.0	434.0	8.1	RG4304100	417.96 x 7.00
420.0	444.0	8.1	RG4304200	430.66 x 7.00
430.0	454.0	8.1	RG4304300	443.36 x 7.00
440.0	464.0	8.1	RG4304400	456.06 x 7.00
450.0	474.0	8.1	RG4304500	468.76 x 7.00
460.0	484.0	8.1	RG4304600	468.76 x 7.00
470.0	494.0	8.1	RG4304700	481.46 x 7.00
480.0	504.0	8.1	RG4304800	494.16 x 7.00
490.0	514.0	8.1	RG4304900	506.86 x 7.00
500.0	524.0	8.1	RG4305000	506.86 x 7.00
510.0	534.0	8.1	RG4305100	532.26 x 7.00
520.0	544.0	8.1	RG4305200	532.26 x 7.00
530.0	554.0	8.1	RG4305300	557.66 x 7.00
540.0	564.0	8.1	RG4305400	557.66 x 7.00
550.0	574.0	8.1	RG4305500	557.66 x 7.00
560.0	584.0	8.1	RG4305600	582.68 x 7.00
570.0	594.0	8.1	RG4305700	582.68 x 7.00
580.0	604.0	8.1	RG4305800	608.08 x 7.00
590.0	614.0	8.1	RG4305900	608.08 x 7.00
600.0	624.0	8.1	RG4306000	608.08 x 7.00
610.0	634.0	8.1	RG4306100	633.48 x 7.00
620.0	644.0	8.1	RG4306200	633.48 x 7.00
630.0	654.0	8.1	RG4306300	658.88 x 7.00
640.0	664.0	8.1	RG4306400	658.88 x 7.00
650.0	677.3	9.5	RG4306500	663 x 8.4
660.0	687.3	9.5	RG4306600	673 x 8.4
670.0	697.3	9.5	RG4306700	683 x 8.4
680.0	707.3	9.5	RG4306800	693 x 8.4
688.0	715.3	9.5	RG4306880	701 x 8.4
690.0	717.3	9.5	RG4306900	703 x 8.4
700.0	724.0	8.1	RG4507000	712 x 7.0
710.0	737.3	9.5	RG4307100	723 x 8.4
740.0	767.3	9.5	RG4307400	753 x 8.4
760.0	784.0	8.1	RG4507600	772 x 7.00
770.0	797.3	9.5	RG4307700	783 x 8.4

The rod diameters in **bold** type are in accordance with the recommendations of ISO 3320.
Other dimensions and all intermediate sizes up to 2.600 mm diameter including imperial (inch) sizes can be supplied.
All O-Rings with 12 mm cross section are delivered as special profilring.

Rod Diameter	Groove Diameter	Groove Width	TSS Part No.	O-Ring Size
d_N f8/h9	D_1 H9	L_1 +0.2		
800.0	827.3	9.5	RG4308000	813 x 8.4
850.0	877.3	9.5	RG4308500	863 x 8.4
870.0	897.3	9.5	RG4308700	883 x 8.4
900.0	927.3	9.5	RG4309000	913 x 8.4
910.0	937.3	9.5	RG4309100	923 x 8.4
950.0	977.3	9.5	RG4309500	963 x 8.4
960.0	987.3	9.5	RG4309600	973 x 8.4
1000.0	1027.3	9.5	RG45X1000	1013 x 8.4
1000.0	1038.0	13.8	RG43X1000	1016 x 12
1050.0	1077.3	9.5	RG45X1050	1063 x 8.4
1050.0	1088.0	13.8	RG43X1050	1066 x 12
1100.0	1138.0	13.8	RG43X1100	1116 x 12
1160.0	1187.3	9.5	RG45X1160	1173 x 8.4
1200.0	1227.3	9.5	RG45X1200	1213 x 8.4
1200.0	1238.0	13.8	RG43X1200	1216 x 12
1300.0	1327.3	9.5	RG45X1300	1313 x 8.4
1300.0	1338.0	13.8	RG43X1300	1316 x 12
1500.0	1527.3	9.5	RG45X1500	1513 x 8.4
1500.0	1538.0	13.8	RG43X1500	1516 x 12
1600.0	1638.0	13.8	RG43X1600	1616 x 12
2000.0	2038.0	13.8	RG43X2000	2016 x 12
2600.0	2638.0	13.8	RG43X2600	2616 x 12

The rod diameters in **bold** type are in accordance with the recommendations of ISO 3320.
Other dimensions and all intermediate sizes up to 2.600 mm diameter including imperial (inch) sizes can be supplied.
All O-Rings with 12 mm cross section are delivered as special profilring.

Turcon® Glyd Ring T®

Double Acting

Rubber Energized Plastic Faced Seal

Material:
Turcon® and Zurcon®

■ Turcon® Glyd Ring® T

Description

Turcon® Glyd Ring® T is a further technical development of the Turcon® Glyd Ring® seal which has been successfully used for decades. It is fully interchangeable with the earlier Glyd Ring® seals in all new applications. Glyd Ring® T meets all the market demands for a function-specific seal solution, observing economic and ecological aspects.

The benefits of the patented seal concept are provided by the innovative functional principle of the trapezoidal profile cross-section.

* Patent-No.:

DE	41 40833 C3
EP	0 582 593
Japan	2 799 367
USA	5,433,452

Both lateral profile flanks are inclined so that the seal profile tapers towards the seal surface. The profile can thus retain the robust and compact form typical of piston seals without losing any of the flexibility required to achieve a pressure-related maximum compression (Figure 68).

The edge angle created by the special Glyd Ring® T cross-sectional form permits an additional degree of freedom and enables a slight tilting movement of the seal. The maximum compression is thus always shifted towards the area of the seal edge directly exposed to the pressure. On the low-pressure edge of the seal, on the other hand, the Glyd Ring® T exhibits only zones with neutral strains without compressive or shearing loads, thus effectively reducing the danger of gap extrusion. The resulting benefits for the user can be seen in the following list.

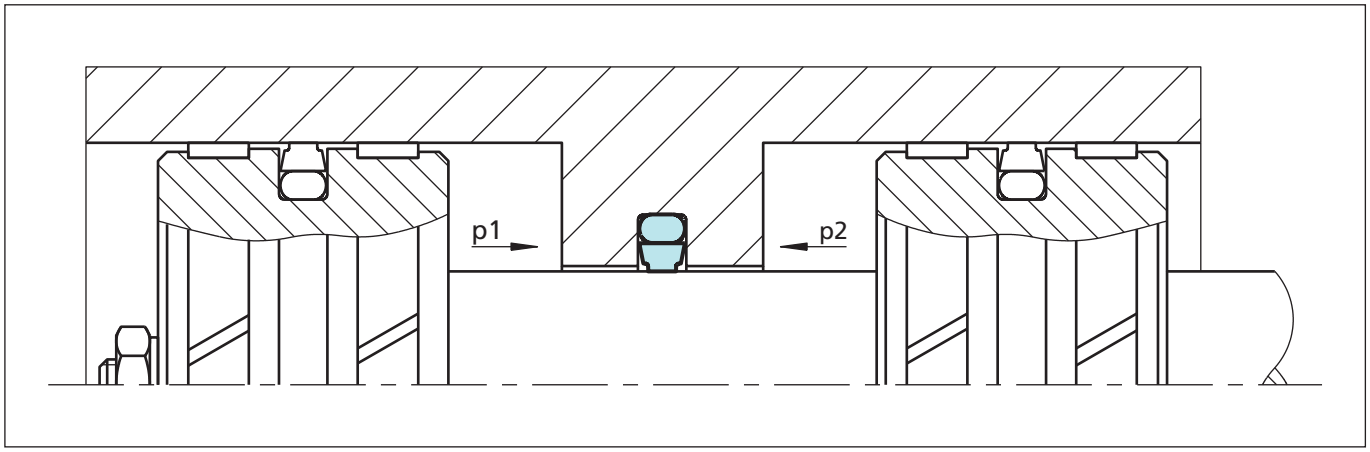

Figure 68 Turcon® Glyd Ring® T

Advantages

The benefits offered to date by Glyd Ring® are still retained in full, and are now complemented by a number of further important advantages:

- Very good static leak-tightness
- Increased clearance possible (approx. +50%), depending on the operating conditions
- Low friction, no stick-slip effect
- Simple groove design
- Installation grooves also to ISO 7425/2
- Available for all rod diameters up to 2,600 mm.

Application Examples

Turcon® Glyd Ring® T is the recommended sealing element for double acting inside sealing seal for hydraulic components such as:

- Injection moulding machines
- Machine tools
- Presses
- Handling machinery
- Servo equipment
- Agriculture
- Valves.

It is particularly recommended for heavy duty and large diameter applications.

Technical Data

Operating pressure:	Up to 60 MPa
Speed:	Up to 15 m/s
Temperature:	-45 °C to +200 °C (depending on O-Ring material)
Media:	Mineral oil-based hydraulic fluids, flame retardant hydraulic fluids, environmentally safe hydraulic fluids (bio-oils), phosphate ester, water, air and others, depending on the O-Ring material compatibility (see Table XLVI)
Clearance:	The maximum permissible radial clearance S_{max} is shown in Table XLVII as a function of the operating pressure and functional diameter.

Important Note:
The above data are maximum values and cannot be used at the same time. e.g. the maximum operating speed depends on material type, pressure, temperature and gap value.
Temperature range also dependent on medium.

Materials

The following material combinations have proven effective for hydraulic applications:

All round material for hydraulic applications with reciprocating, short stroke or helical movements in mineral oils, flame retardant hydraulic fluids HFC, phosphate ester, bio-oils or fluids having less satisfactory lubricating properties:

Turcon® Glyd Ring® T:	Turcon® M12	
O-Ring:	NBR, 70 Shore A	N
	FKM, 70 Shore A	V
Set code:	M12N or M12V	

For medium to heavy applications with reciprocating movements in mineral oils and other media with good lubrication:

Turcon® Glyd Ring® T:	Turcon® T46	
O-Ring:	NBR, 70 Shore A	N
	FKM, 70 Shore A	V
Set code:	T46N or T46V	

For specific applications, other viable material combinations are listed in Table Table XLVI.

Series

Different cross-section sizes are recommended as a function of the seal diameters.

Table Table XLVII, shows the relationship between the series number according to the seal diameter range and the different application class sizes. These application classes are:

Standard application:	General applications in which no exceptional operating conditions exist.
Light application:	Applications with demands for reduced friction or for smaller grooves.
Heavy-duty application:	For exceptional operating loads such as high pressures, pressure peaks, etc.

Table XLV Available range

Series No.	Rod Diameter d_N f8/h9
RT00	2.0 - 130.0
RT01	4.0 - 240.0
RT02	6.0 - 450.0
RT03	12.0 - 650.0
RT04	38.0 - 650.0
RT08	200.0 - 999.9
RT05	256.0 - 999.9
RT05X	1000.0 - 1200.0
RT06	650.0 - 999.9
RT06X	1000.0 - 2600.0

For the recommended range see Table Table XLVII.

Table XLVI Turcon® and Zurcon® Materials for Glyd Ring® T

Material, Applications, Properties	Code	O–Ring Material Shore A	Code	O-Ring Operating Temp.*°C	Mating Surface Material	MPa max. Dyna-mic
Turcon® M12 First material choice for seals in linear motion Overall improved properties For new constructions and updating For all commonly applied hydraulic fluids including fluids with low lubrication performance Lowest friction and best sliding properties Lowest wear on seals Improved absorption of abrasive contaminants No wear or abrasion of counter surface Colour: Dark grey	M12	NBR- 70	N	-30 to +100	Steel Steel hardened Steel chrome plated (rod) Steel plated (rod) Cast iron Stainless steel Titanium	50
		NBR- 70 Low temp.	T	-45 to +80		
		FKM- 70	V	-10 to +200		
Turcon® T40 For lubricating and non-lubricating fluids **Water hydraulics** Surface texture is not suitable for gas sealing Carbon fibre filled Colour: Grey.	T40	NBR- 70	N	-30 to +100	Steel Steel hardened Steel chrome plated (rod) Cast iron Stainless steel Aluminium	25
		NBR- 70 Low temp.	T	-45 to +80		
		FKM- 70	V	-10 to +200		
		EPDM- 70	E**	-45 to +145		
Turcon® T46 For lubricated hydraulics in linear motion High compressive strength High extrusion resistance Very good sliding and wear properties BAM tested Bronze filled Colour: Light to dark brown, which may have variations in shading.	T46	NBR- 70	N	-30 to +100	Steel hardened Steel chrome plated (rod) Cast iron	50
		NBR- 70 Low temp.	T	-45 to +80		
		FKM- 70	V	-10 to +200		
Zurcon® Z51*** For mineral oil based fluids **Very high abrasion and extrusion resistance** For counter surface with rougher surface finish Hard to install Limited chemical resistance Max. working temperature 110 °C Cast polyurethane Colour: Yellow to light-brown.	Z51	NBR- 70	N	-30 to +100	Steel Steel hardened Steel chrome plated (rod) Cast iron Stainless steel Ceramic coating	60
		NBR- 70 Low temp.	T	-45 to +80		
Zurcon® Z80 For lubricating and non-lubricating fluids Water based fluids, air and gases Dry air pneumatics High abrasion and extrusion resistance For service in abrasive conditions and media with particles Good chemical resistance Limited temperature capability (-60 to +80 °C) UHMWPE (Ultra High Molecular Weight Polyethylene) Colour: White to off-white.	Z80	NBR- 70	N	-30 to (+100)	Steel Steel hardened Steel chrome plated (rod) Stainless steel Aluminium Ceramic coating	35
		NBR- 70 Low temp.	T	-45 to +80		
		EPDM- 70	E**	-45 to(+145)		

* The O-Ring Operation Temperature is only valid in mineral hydraulic oil (except EPDM). ** Material not suitable for mineral oils.
*** Max. ø 2200 BAM: Tested by "Bundesanstalt Materialprüfung, Germany". Highlighted materials are standard.

■ Installation Recommendation

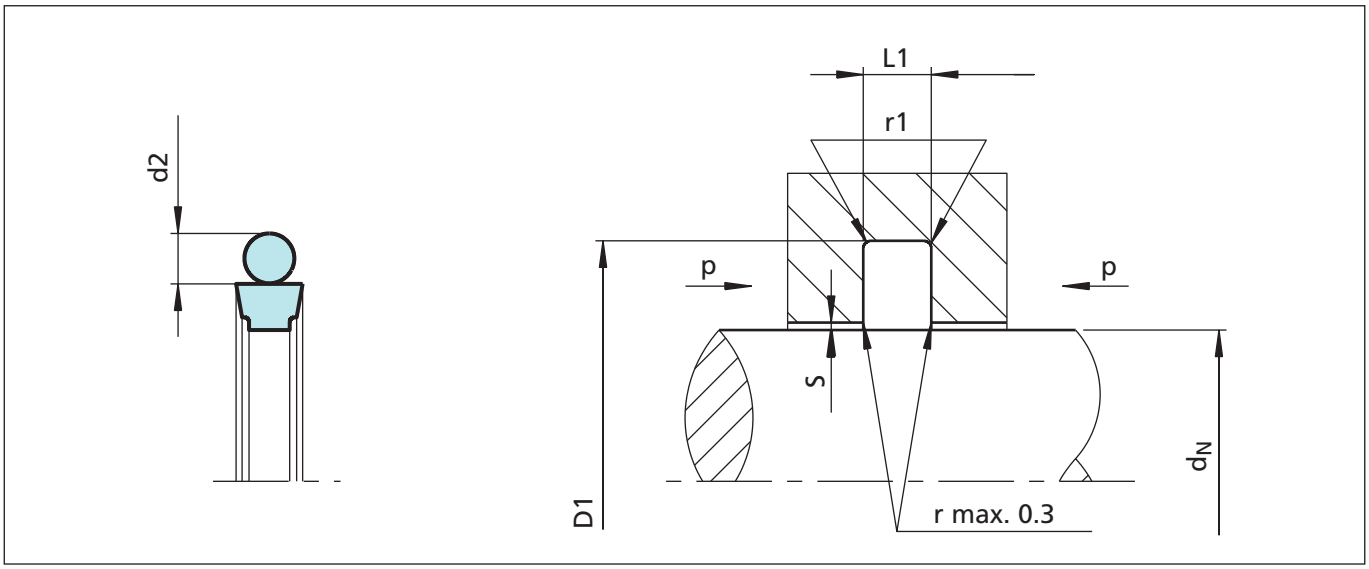

Figure 69 Installation drawing

Table XLVII Installation dimensions – Standard recommendations

Series No.	Rod Diameter d_N f8/h9			Groove Diameter*	Groove Width	Radius	Radial Clearance S max. **			O-Ring Cross-Section
	Standard Application	Light Application	Heavy Duty Application	D_1 H9	L_1 +0.2	r_1	10 MPa	20 MPa	40 MPa	d_2
RT00	3 - 7.9	8 - 18.9	-	d_N + 4.9	2.2	0.4	0.40	0.30	0.20	1.78
RT01	8 - 18.9	19 - 37.9	-	d_N + 7.3	3.2	0.6	0.60	0.50	0.30	2.62
RT02	19 - 37.9	38 - 199.9	8 - 18.9	d_N + 10.7	4.2	1.0	0.70	0.50	0.30	3.53
RT03	38 - 199.9	200 - 255.9	19 - 37.9	d_N + 15.1	6.3	1.3	0.80	0.60	0.40	5.33
RT04	200 - 255.9	256 - 649.9	38 - 199.9	d_N + 20.5	8.1	1.8	0.80	0.60	0.40	7.00
RT08	256 - 649.9	650 - 999.9	200 - 255.9	d_N + 24.0	8.1	1.8	0.90	0.70	0.50	7.00
RT05	650 - 999.9	≥ 1000	256 - 649.9	d_N + 27.3	9.5	2.5	1.00	0.80	0.60	8.40
RT06***	≥ 1000	-	650 - 999.9	d_N + 38.0	13.8	3.0	1.20	0.90	0.70	12.00

* Installation with groove dimensions to ISO 7425/2 is also recommendable.
** At pressures **> 40 MPa** use diameter tolerance H8/f8 (bore/rod) in area of the seal or consult TSS for alternative material or profiles. TSS Slydring®/Wear Rings are not applicable at very small radial clearance; consult the Slydring® catalog.
*** O-Rings with 12 mm cross section are delivered as special profilring.

Ordering Example

Turcon® Glyd Ring® T, complete with O-Ring, standard application, Series RT03 (from Table XLVII).

Rod diameter: d_N = 80.0 mm
TSS Part No.: RT0300800 (from Table XLVIII)

Select the material from Table XLVI. The corresponding code numbers are appended to the TSS Part No. (from Table XLVIII).
Together these form the TSS Article Number. The TSS Article Number for all intermediate sizes not shown in Table XLVIII can be determined following the example below.

**** For diameters ≥ 1000.0 mm multiply only by factor 1.
Example: RT06 for diameter 1200.0 mm.
TSS Article No.: RT06**X1200** - M12N.

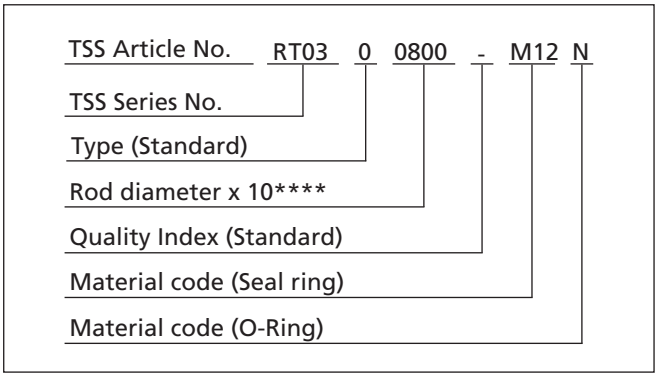

Table XLVIII Installation dimensions / TSS Part No.

Rod Diameter	Groove Diameter	Groove Width	TSS Part No.	O-Ring Size
d_N f8/h9	D_1 H9	L_1 +0.2		
3.0	7.9	2.2	RT0000030	4.47 x 1.78
4.0	**8.9**	**2.2**	**RT0000040**	**5.6 x 1.8**
5.0	**9.9**	**2.2**	**RT0000050**	**6.7 x 1.8**
6.0	**10.9**	**2.2**	**RT0000060**	**7.65 x 1.78**
7.0	11.9	2.2	RT0000070	8.75 x 1.8
8.0	**12.9**	**2.2**	**RT0000080**	**9.5 x 1.8**
8.0	**15.3**	**3.2**	**RT0100080**	**10.77 x 2.62**
10.0	**14.9**	**2.2**	**RT0000100**	**11.8 x 1.8**
10.0	**17.3**	**3.2**	**RT0100100**	**12.37 x 2.62**
12.0	**16.9**	**2.2**	**RT0000120**	**14.0 x 1.78**
12.0	**19.3**	**3.2**	**RT0100120**	**13.94 x 2.62**
14.0	**18.9**	**2.2**	**RT0000140**	**15.6 x 1.78**
14.0	**21.3**	**3.2**	RT0100140	**17.12 x 2.62**
15.0	19.9	2.2	RT0000150	17.17 x 1.78
15.0	22.3	3.2	RT0100150	17.12 x 2.62
16.0	20.9	2.2	RT0000160	17.17 x 1.78
16.0	23.3	3.2	RT0100160	18.72 x 2.62
18.0	22.9	2.2	RT0000180	20.35 x 1.78
18.0	**25.3**	**3.2**	**RT0100180**	**20.29 x 2.62**
19.0	29.7	4.2	RT0200190	23.39 x 3.53
20.0	**27.3**	**3.2**	**RT0100200**	**21.89 x 2.62**

The rod diameters in **bold** type are in accordance with the recommendations of ISO 3320.
Other dimensions and all intermediate sizes up to 2.600 mm diameter including imperial (inch) sizes can be supplied.
All O-Rings with 12 mm cross section are delivered as special profilring.

Rod Diameter	Groove Diameter	Groove Width	TSS Part No.	O-Ring Size
d_N f8/h9	D_1 H9	L_1 +0.2		
20.0	**30.7**	**4.2**	**RT0200200**	**25.0 x 3.53**
22.0	**29.3**	**3.2**	**RT0100220**	**25.07 x 2.62**
22.0	**32.7**	**4.2**	**RT0200220**	**26.57 x 3.53**
24.0	31.3	3.2	RT0100240	26.64 x 2.62
25.0	**32.3**	**3.2**	**RT0100250**	**28.24 x 2.62**
25.0	**35.7**	**4.2**	**RT0200250**	**29.74 x 3.53**
25.4	32.7	3.2	RT0100254	28.24 x 2.62
25.4	36.1	4.2	RT0200254	29.74 x 3.53
26.0	33.3	3.2	RT0100260	28.24 x 2.62
26.0	36.7	4.2	RT0200260	29.74 x 3.53
27.0	34.3	3.2	RT0100270	29.82 x 2.62
28.0	35.3	3.2	RT0100280	29.82 x 2.62
28.0	**38.7**	**4.2**	**RT0200280**	**32.92 x 3.53**
28.575	35.875	3.2	RT0100286	31.42 x 2.62
29.0	36.3	3.2	RT0100290	31.42 x 2.62
30.0	37.3	3.2	RT0100300	32.99 x 2.62
30.0	40.7	4.2	RT0200300	34.52 x 3.53
32.0	39.3	3.2	RT0100320	34.59 x 2.62
32.0	**42.7**	**4.2**	**RT0200320**	**36.09 x 3.53**
35.0	42.3	3.2	RT0100350	37.77 x 2.62
35.0	45.7	4.2	RT0200350	37.69 x 3.53
36.0	43.3	3.2	RT0100360	39.34 x 2.62
36.0	**46.7**	**4.2**	**RT0200360**	**40.87 x 3.53**
38.0	48.7	4.2	RT0200380	40.87 x 3.53
38.0	53.1	6.3	RT0300380	43.82 x 5.33
39.0	49.7	4.2	RT0200390	44.04 x 3.53
40.0	**50.7**	**4.2**	**RT0200400**	**44.04 x 3.53**
40.0	**55.1**	**6.3**	**RT0300400**	**43.82 x 5.33**
42.0	52.7	4.2	RT0200420	47.22 x 3.53
42.0	57.1	6.3	RT0300420	46.99 x 5.33
44.0	54.7	4.2	RT0200440	47.22 x 3.53
44.45	59.55	6.3	RT0300444	50.17 x 5.33
45.0	**55.7**	**4.2**	**RT0200450**	**50.39 x 3.53**
45.0	**60.1**	**6.3**	**RT0300450**	**50.17 x 5.33**
48.0	58.7	4.2	RT0200480	53.57 x 3.53
48.0	63.1	6.3	RT0300480	53.34 x 5.33

The rod diameters in **bold** type are in accordance with the recommendations of ISO 3320.
Other dimensions and all intermediate sizes up to 2.600 mm diameter including imperial (inch) sizes can be supplied.
All O-Rings with 12 mm cross section are delivered as special profilring.

Rod Diameter	Groove Diameter	Groove Width	TSS Part No.	O-Ring Size
d_N f8/h9	D_1 H9	L_1 +0.2		
50.0	**60.7**	**4.2**	**RT0200500**	**53.57 x 3.53**
50.0	**65.1**	**6.3**	**RT0300500**	**56.52 x 5.33**
50.8	61.5	4.2	RT0200508	53.57 x 3.53
50.8	65.9	6.3	RT0300508	56.52 x 5.33
52.0	62.7	4.2	RT0200520	56.74 x 3.53
52.0	67.1	6.3	RT0300520	56.52 x 5.33
54.0	69.1	6.3	RT0300540	59.69 x 5.33
55.0	65.7	4.2	RT0200550	59.92 x 3.53
55.0	70.1	6.3	RT0300550	59.69 x 5.33
56.0	**66.7**	**4.2**	**RT0200560**	**59.92 x 3.53**
56.0	**71.1**	**6.3**	**RT0300560**	**62.87 x 5.33**
58.0	73.1	6.3	RT0300580	62.87 x 5.33
60.0	70.7	4.2	RT0200600	63.09 x 3.53
60.0	75.1	6.3	RT0300600	66.04 x 5.33
63.0	**73.7**	**4.2**	**RT0200630**	**66.27 x 3.53**
63.0	**78.1**	**6.3**	**RT0300630**	**69.22 x 5.33**
65.0	80.1	6.3	RT0300650	69.22 x 5.33
67.0	77.7	4.2	RT0200670	72.62 x 3.53
70.0	80.7	4.2	RT0200700	75.79 x 3.53
70.0	**85.1**	**6.3**	**RT0300700**	**75.57 x 5.33**
72.0	82.7	4.2	RT0200720	75.79 x 3.53
75.0	85.7	4.2	RT0200750	78.97 x 3.53
75.0	90.1	6.3	RT0300750	81.92 x 5.33
80.0	90.7	4.2	RT0200800	85.32 x 3.53
80.0	**95.1**	**6.3**	**RT0300800**	**85.09 x 5.33**
83.0	93.7	4.2	RT0200830	88.49 x 3.53
85.0	100.1	6.3	RT0300850	91.44 x 5.33
86.0	96.7	4.2	RT0200860	91.67 x 3.53
90.0	100.7	4.2	RT0200900	94.84 x 3.53
90.0	**105.1**	**6.3**	**RT0300900**	**94.62 x 5.33**
92.0	102.7	4.2	RT0200920	98.02 x 3.53
95.0	105.7	4.2	RT0200950	101.19 x 3.53
95.0	110.1	6.3	RT0300950	100.97 x 5.33
100.0	110.7	4.2	RT0201000	104.37 x 3.53
100.0	**115.1**	**6.3**	**RT0301000**	**107.32 x 5.33**
101.6	112.3	4.2	RT0201016	107.54 x 3.53

The rod diameters in **bold** type are in accordance with the recommendations of ISO 3320.
Other dimensions and all intermediate sizes up to 2.600 mm diameter including imperial (inch) sizes can be supplied.
All O-Rings with 12 mm cross section are delivered as special profilring.

Rod Diameter	Groove Diameter	Groove Width	TSS Part No.	O-Ring Size
d_N f8/h9	D_1 H9	L_1 +0.2		
101.6	116.7	6.3	RT0301016	107.32 x 5.33
104.7	119.8	6.3	RT0301047	110.49 x 5.33
105.0	115.7	4.2	RT0201050	110.72 x 3.53
105.0	120.1	6.3	RT0301050	110.49 x 5.33
110.0	120.7	4.2	RT0201100	113.89 x 3.53
110.0	**125.1**	**6.3**	**RT0301100**	**116.84 x 5.33**
110.0	130.5	8.1	RT0401100	120.02 x 7.00
112.0	127.1	6.3	RT0301120	116.84 x 5.33
115.0	125.7	4.2	RT0201150	120.24 x 3.53
115.0	130.1	6.3	RT0301150	120.02 x 5.33
118.0	133.1	6.3	RT0301180	123.19 x 5.33
120.0	130.7	4.2	RT0201200	123.42 x 3.53
120.0	135.1	6.3	RT0301200	126.37 x 5.33
125.0	135.7	4.2	RT0201250	129.77 x 3.53
125.0	**140.1**	**6.3**	**RT0301250**	**129.54 x 5.33**
129.0	139.7	4.2	RT0201290	132.94 x 3.53
130.0	140.7	4.2	RT0201300	136.12 x 3.53
130.0	145.1	6.3	RT0301300	135.89 x 5.33
135.0	145.7	4.2	RT0201350	139.29 x 3.53
135.0	150.1	6.3	RT0301350	142.24 x 5.33
140.0	150.7	4.2	RT0201400	145.64 x 3.53
140.0	**155.1**	**6.3**	**RT0301400**	**145.42 x 5.33**
145.0	155.7	4.2	RT0201450	148.82 x 3.53
145.0	160.1	6.3	RT0301450	151.77 x 5.33
150.0	165.1	6.3	RT0301500	158.12 x 5.33
160.0	**175.1**	**6.3**	**RT0301600**	**164.47 x 5.33**
160.0	**180.5**	**8.1**	**RT0401600**	**170.82 x 7.00**
165.0	180.1	6.3	RT0301650	170.82 x 5.33
170.0	180.7	4.2	RT0201700	177.39 x 3.53
170.0	185.1	6.3	RT0301700	177.17 x 5.33
175.0	190.1	6.3	RT0301750	183.52 x 5.33
180.0	190.7	4.2	RT0201800	183.74 x 3.53
180.0	**195.1**	**6.3**	**RT0301800**	**183.52 x 5.33**
180.0	**200.5**	**8.1**	**RT0401800**	**189.87 x 7.00**
190.0	200.7	4.2	RT0201900	196.44 x 3.53
190.0	205.1	6.3	RT0301900	196.22 x 5.33

The rod diameters in **bold** type are in accordance with the recommendations of ISO 3320.
Other dimensions and all intermediate sizes up to 2.600 mm diameter including imperial (inch) sizes can be supplied.
All O-Rings with 12 mm cross section are delivered as special profilring.

Rod Diameter	Groove Diameter	Groove Width	TSS Part No.	O-Ring Size
d_N f8/h9	D_1 H9	L_1 +0.2		
200.0	215.1	6.3	RT0302000	208.92 x 5.33
200.0	**220.5**	**8.1**	**RT0402000**	**208.90 x 7.00**
205.0	220.1	6.3	RT0302050	208.92 x 5.33
210.0	225.1	6.3	RT0302100	215.27 x 5.33
220.0	235.1	6.3	RT0302200	227.97 x 5.33
220.0	**240.5**	**8.1**	**RT0402200**	**227.97 x 7.00**
230.0	245.1	6.3	RT0302300	234.32 x 5.33
230.0	250.5	8.1	RT0402300	240.67 x 7.00
240.0	255.1	6.3	RT0302400	247.02 x 5.33
240.0	260.5	8.1	RT0402400	253.37 x 7.00
250.0	**270.5**	**8.1**	**RT0402500**	**266.07 x 7.00**
260.0	284.0	8.1	RT0802600	266.07 x 7.00
270.0	290.5	8.1	RT0402700	278.77 x 7.00
270.0	294.0	8.1	RT0802700	278.77 x 7.00
275.0	299.0	8.1	RT0802750	291.47 x 7.00
280.0	300.5	8.1	RT0402800	291.47 x 7.00
280.0	**304.0**	**8.1**	**RT0802800**	**291.47 x 7.00**
290.0	310.5	8.1	RT0402900	304.17 x 7.00
290.0	314.0	8.1	RT0802900	304.17 x 7.00
300.0	324.0	8.1	RT0803000	316.87 x 7.00
310.0	330.5	8.1	RT0403100	316.87 x 7.00
310.0	334.0	8.1	RT0803100	316.87 x 7.00
320.0	**344.0**	**8.1**	**RT0803200**	**329.57 x 7.00**
330.0	354.0	8.1	RT0803300	342.27 x 7.00
340.0	364.0	8.1	RT0803400	354.97 x 7.00
350.0	370.5	8.1	RT0403500	354.97 x 7.00
350.0	374.0	8.1	RT0803500	367.67 x 7.00
360.0	**384.0**	**8.1**	**RT0803600**	**367.67 x 7.00**
370.0	390.5	8.1	RT0403700	380.37 x 7.00
370.0	394.0	8.1	RT0803700	380.37 x 7.00
380.0	404.0	8.1	RT0803800	393.07 x 7.00
390.0	414.0	8.1	RT0803900	405.26 x 7.00
400.0	420.5	8.1	RT0404000	417.96 x 7.00
400.0	424.0	8.1	RT0804000	417.96 x 7.00
410.0	434.0	8.1	RT0804100	417.96 x 7.00
420.0	444.0	8.1	RT0804200	430.66 x 7.00

The rod diameters in **bold** type are in accordance with the recommendations of ISO 3320.
Other dimensions and all intermediate sizes up to 2.600 mm diameter including imperial (inch) sizes can be supplied.
All O-Rings with 12 mm cross section are delivered as special profilring.

Rod Diameter	Groove Diameter	Groove Width	TSS Part No.	O-Ring Size
d_N f8/h9	D_1 H9	L_1 +0.2		
430.0	454.0	8.1	RT0804300	443.36 x 7.00
440.0	464.0	8.1	RT0804400	456.06 x 7.00
450.0	474.0	8.1	RT0804500	468.76 x 7.00
460.0	484.0	8.1	RT0804600	468.76 x 7.00
470.0	494.0	8.1	RT0804700	481.46 x 7.00
480.0	504.0	8.1	RT0804800	494.16 x 7.00
490.0	514.0	8.1	RT0804900	506.86 x 7.00
500.0	524.0	8.1	RT0805000	506.86 x 7.00
510.0	534.0	8.1	RT0805100	532.26 x 7.00
520.0	544.0	8.1	RT0805200	532.26 x 7.00
530.0	554.0	8.1	RT0805300	557.66 x 7.00
540.0	564.0	8.1	RT0805400	557.66 x 7.00
550.0	574.0	8.1	RT0805500	557.66 x 7.00
560.0	584.0	8.1	RT0805600	582.68 x 7.00
570.0	594.0	8.1	RT0805700	582.68 x 7.00
580.0	604.0	8.1	RT0805800	608.08 x 7.00
590.0	614.0	8.1	RT0805900	608.08 x 7.00
600.0	624.0	8.1	RT0806000	608.08 x 7.00
610.0	634.0	8.1	RT0806100	633.48 x 7.00
620.0	644.0	8.1	RT0806200	633.48 x 7.00
630.0	654.0	8.1	RT0806300	658.88 x 7.00
640.0	664.0	8.1	RT0806400	658.88 x 7.00
650.0	677.3	9.5	RT0506500	663 x 8.4
660.0	687.3	9.5	RT0506600	673 x 8.4
670.0	697.3	9.5	RT0506700	683 x 8.4
680.0	707.3	9.5	RT0506800	693 x 8.4
688.0	715.3	9.5	RT0506880	701 x 8.4
690.0	717.3	9.5	RT0506900	703 x 8.4
700.0	724.0	8.1	RT0807000	712 x 7.0
710.0	737.3	9.5	RT0507100	723 x 8.4
740.0	767.3	9.5	RT0507400	753 x 8.4
760.0	784.0	8.1	RT0807600	772 x 7.00
770.0	797.3	9.5	RT0507700	783 x 8.4
800.0	827.3	9.5	RT0508000	813 x 8.4
850.0	877.3	9.5	RT0508500	863 x 8.4
870.0	897.3	9.5	RT0508700	883 x 8.4

The rod diameters in **bold** type are in accordance with the recommendations of ISO 3320.
Other dimensions and all intermediate sizes up to 2.600 mm diameter including imperial (inch) sizes can be supplied.
All O-Rings with 12 mm cross section are delivered as special profilring.

Rod Diameter	Groove Diameter	Groove Width	TSS Part No.	O-Ring Size
d_N f8/h9	D_1 H9	L_1 +0.2		
900.0	927.3	9.5	RT0509000	913 x 8.4
910.0	937.3	9.5	RT0509100	923 x 8.4
950.0	977.3	9.5	RT0509500	963 x 8.4
960.0	987.3	9.5	RT0509600	973 x 8.4
1000.0	1027.3	9.5	RT05X1000	1013 x 8.4
1000.0	1038.0	13.8	RT06X1000	1016 x 12
1050.0	1077.3	9.5	RT05X1050	1063 x 8.4
1050.0	1088.0	13.8	RT06X1050	1066 x 12
1100.0	1138.0	13.8	RT06X1100	1116 x 12
1160.0	1187.3	9.5	RT05X1160	1173 x 8.4
1200.0	1227.3	9.5	RT05X1200	1213 x 8.4
1200.0	1238.0	13.8	RT06X1200	1216 x 12
1300.0	1338.0	13.8	RT06X1300	1316 x 12
1500.0	1538.0	13.8	RT06X1500	1516 x 12
1600.0	1638.0	13.8	RT06X1600	1616 x 12
2000.0	2038.0	13.8	RT06X2000	2016 x 12
2600.0	2638.0	13.8	RT06X2600	2616 x 12

The rod diameters in **bold** type are in accordance with the recommendations of ISO 3320.
Other dimensions and all intermediate sizes up to 2.600 mm diameter including imperial (inch) sizes can be supplied.
All O-Rings with 12 mm cross section are delivered as special profilring.

Turcon® AQ-Seal® with Bean Seal

Double Acting

Rubber Energized Plastic Faced Seal

Material:
Turcon® and Zurcon®

■ Turcon® AQ-Seal® with Bean Seal

Description

The Turcon® AQ-Seal® with Bean Seal is a double-acting seal consisting of a seal ring of high-grade modified Turcon® material, a Bean Seal in Zurcon® Z52 and an O-Ring as energizing element.

The Turcon® seal ring and the Bean Seal together assume the dynamic sealing function whilst the O-Ring performs the static sealing function.

The AQ-Seal® with Bean Seal is supplied as standard with radial notches on both sides. These ensure direct pressurizing of the seal under all operating conditions.

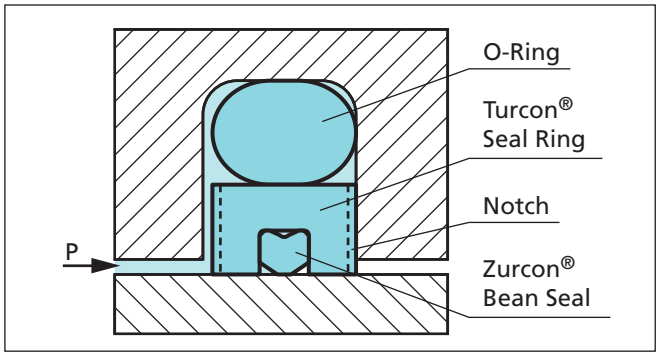

Figure 70 Turcon® AQ-Seal® with Bean Seal

The AQ-Seal® with Bean Seal combines the benefits of a low-friction Turcon® slipper seal with the high sealing characteristics of an elastomeric seal by incorporating a limited foot print Bean Seal in the dynamic sealing face. This optimizes leakage control while minimizing friction.

* Patent-No. EP 0 424 372

Advantages

- High sealing effect in applications requiring media separation, e.g. fluid/fluid or fluid/gas
- Double security through the combination of low friction special materials with elastomer seals
- Higher pressure application, higher sliding speed compared to the AQ-Seal®
- Outstanding sliding properties, no stick-slip effect.
- Simple groove design, small installation space according to ISO 7425/2. Interchangeable with Turcon® Glyd Ring®, Turcon® Glyd Ring® T and Turcon® Stepseal® 2K groove possible
- Available for any rod diameters from 19 and up to 2200 mm.

Application Examples

The Turcon® AQ-Seal® with Bean Seal is the recommended sealing element for double acting positioning and holding cylinders for:

- Mobil hydraulic
- Machine tools
- Presses
- Stabilizers
- Heavy duty suspension cylinders
- Medium separation of fluid /fluid or fluid/gas; please note that one of the media must be lubricating
- Hydro-pneumatic suspensions for heavy vehicles
- Cylinders with retaining function over longer periods such as jacks and support cylinders.

Technical Data

Operating conditions:

Pressure:	Up to 50 MPa with mineral oil Up to 30 MPa for media with reduced lubricating properties
Speed:	Up to 2 m/s with reciprocating movements
Temperature:	-45 °C to +110 °C depending on seal and O-Ring material)
Media:	Mineral oil-based hydraulic fluids, HEES, HETG and flame retardant hydraulic fluids HFA, HFC up to +60 °C, phosphate ester and others, depending on temperature, O-Ring and Bean Seal material compatibility (see Table XLIX)
Clearance:	The maximum permissible radial clearance S_{max} is shown in Table L as a function of the operating pressure and functional diameter.

Important Note:
The above data are maximum values and cannot be used at the same time. e.g. the maximum operating speed depends on material type, pressure, temperature and gap value.
Temperature range also dependent on medium.

Materials

The following material combinations have proven effective for hydraulic applications:

All round material for hydraulic applications with reciprocating, short stroke or helical movements in mineral oils, flame retardant hydraulic fluids HFC, phosphate ester, bio-oils or fluids having less satisfactory lubricating properties:

Turcon® AQ-Seal®:	Turcon® M12	
Bean Seal:	Zurcon® Z52	
O-Ring:	NBR, 70 Shore A	N
	FKM, 70 Shore A	V
Set code:	M12N or M12V	

For medium to heavy applications with reciprocating movements in mineral oils and other media with good lubrication:

Turcon® AQ-Seal®:	Turcon® T46	
Bean Seal:	Zurcon® Z52	
O-Ring:	NBR, 70 Shore A	N
	FKM, 70 Shore A	V
Set code:	T46N or T46V	

For specific applications, all Turcon® materials are available.Other viable material combinations are listed in Table XLIX.

Table XLIX Recommended Turcon® Materials for Turcon® AQ-Seal® Bean Seal

Material, Applications, Properties	Code	O–Ring Material Shore A	Code	O-Ring Operating Temp.* °C	Mating Surface Material	MPa max. Dyna-mic
Turcon® M12 First material choice for seals in linear motion Overall improved properties For new constructions and updating For all commonly applied hydraulic fluids including fluids with low lubrication performance Lowest friction and best sliding properties Lowest wear on selas Improved absorption of abrasion of counter surfcace Mineal fibre and Additives filled Colour: Dark grey	M12	NBR- 70	N	-30 to +100	Steel Steel hardened Steel chrome plated (rod) Steel plated (rod) Cast iron Stainless steel Titanium	40
		NBR- 70 Low temp.	T	-45 to +80		
		FKM- 70	V	-10 to (+200)		
Turcon® T08 For lubricating fluids and linear motion Very high compressive strength and extrusion resistance Hard counter surfaces is recommended Bronze filled Colour: Light to dark brown, which may have variations in shading	T08	NBR- 70	N	-30 to +100	Steel hardened Steel chrome plated (rod) Cast iron	50
		NBR- 70 Low temp.	T	-45 to +80		
		FMK- 70	V	-10 to (+200)		
Turcon® T10 For hydraulic and pneumatic For linear motion in lubricating and non-lubricating fluids High extrusion resistance Good chemical resistance Not for electrically conducting fluids Carbon, graphite filled Colour: Black	T10	NBR- 70	N	-30 to +100	Steel Steel chrome plated (rod) Stainless steel	30
		NBR- 70 Low temp.	T	-45 to +80		
		FKM- 70	V	-10 to (+200)		
Turcon® T29 For lubricating and non-lubricating fluids Good extrusion resistance Surface texture is not suitable for gas sealin Not for electrically conducting fluids Carbon fibre filled Colour: Grey	T29	NBR- 70	N	-30 to +100	Steel Steel chrome plated (rod) Cast iron Stainless steel	30
		NBR- 70 Low temp.	T	-45 to +80		
		FKM- 70	V	-10 to (+200)		
Turcon® T40 For lubricating and non-lubricating fluids High frequency and short strokes Water hydraulics Surface texture is not suitable for gas sealing Carbon fibre filled Colour: Grey.	T40	NBR- 70	N	-30 to +100	Steel chrome plated (rod) Cast iron Stainless steel Aluminium	25
		NBR- 70 Low temp.	T	-45 to +80		
		FKM- 70	V	-10 to (+200)		
Turcon® T46 For lubricated hydraulics in linear motion High compressive strength High extrusion resistance Very good sliding and wear properties Bronze filled Colour: Light to dark brown, which may have variations in shading	T46	NBR- 70	N	-30 to +100	Steel hardened Steel chrome plated (rod) Cast iron	40
		NBR- 70 Low temp.	T	-45 to +80		
		FKM- 70	V	-10 to (+200)		

Turcon® AQ-Seal® Bean Seal

Material, Applications, Properties	Code	O–Ring Material Shore A	Code	O-Ring Operating Temp.* °C	Mating Surface Material	MPa max. Dyna-mic
Zurcon® Z80 For lubricating and non-lubricating fluids Water based fluids, air and gases Dry air pneumatics High abrasion and extrusion resistance For service in abrasive conditions and media with particles Good chemical resistance Limited temperature capability (-60 to +80 °C) UHMWPE (Ultra High Molecular Weight Polyethylene) Colour: White to off-white	Z80	NBR- 70	N	-30 to (+100)	Steel Steel hardened Steel chrome plated (rod) Stainless steel Aluminium Ceramic coating	30
		NBR- 70 Low temp.	T	-45 to +80		

* The O-Ring Operation Temperature is only valid in mineral hydraulic oil (except EPDM). ** Material not suitable for mineral oils.
BAM: Tested by "Bundesanstalt Materialprüfung, Germany". Highlighted materials are standard.

■ Installation Recommendation

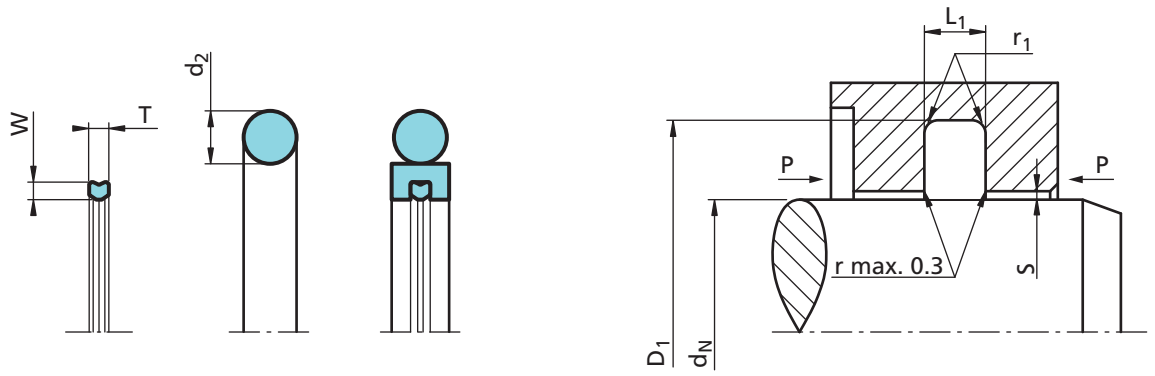

Figure 71 Installation drawing

Table L Installation dimensions – Standard installation

Series No.	Rod Diameter d_N f8/h9		Groove Diameter	Groove Width	Radius	Radial Clearance S max*			O-Ring Cross Sec.	Bean Seal Cross Sec.	
	Standard Application	Available Range	D_1 H9	L_1 +0.2	r_1	10 MPa	20 MPA	40 MPa	d_2	W	T
RQB20	19 - 37.9	18 - 450.0	d_N + 11.0	4.2	1.0	0.25	0.15	0.10	3.35	1.70	1.70
RQB30	38 - 199.9	30 - 650.0	d_N + 15.5	6.3	1.3	0.30	0.20	0.15	5.33	1.70	1.70
RQB40	200 - 255.9	105 - 999.9	d_N + 21.0	8.1	1.8	0.30	0.20	0.15	7.00	2.45	2.45
RQB80	256 - 649.9	120 - 999.9	d_N + 24.5	8.1	1.8	0.30	0.20	0.15	7.00	2.45	2.45
RQB50	650 - 999.9	285 - 999.9	d_N + 28.0	9.5	2.5	0.45	0.30	0.25	8.40	3.50	3.65
RQB5X	-	1000 - 1200.0	d_N + 28.0	9.5	2.5	0.45	0.40	0.35	8.40	3.50	3.65
RQB60	-	650 - 999.9	d_N + 38.0	13.8	3.0	0.70	0.60	0.45	12.00	5.20	5.05
RQB6X	1000 - 2200	-	d_N + 38.0	13.8	3.0	0.70	0.60	0.45	12.00	5.20	5.05

*At pressures > 40 MPa use diameter tolerance H8/f8 (bore/rod) in area of the seal or use Turcon® AQ-Seal® 5 CR.
TSS Slydring®/Wear Rings are not applicable at very small radial clearance; consult the Slydring® catalog.
All AQ-Seal® supplied without Bean Seals must have "W" in the 5th character of the TSS Article Number.

Ordering example

Turcon® AQ-Seal® complete with Bean Seal and O-Rings, standard application:

Series: RQB30 (from Table L)
Rod diameter: d_N = 80.0 mm
TSS Part No.: RQB300800 (from Table LI)
Select the material from Table XLIX. The corresponding code numbers are appended to the TSS Part No. Together these form the TSS Article Number.

The TSS Article Number for all intermediate sizes not shown in Table LI can be determined following the example below.

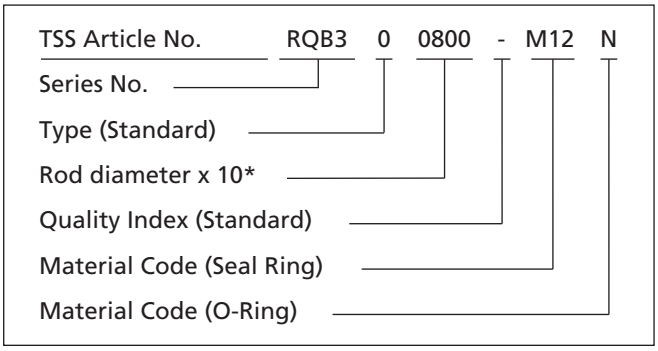

* For diameters ≥ 1000.0 mm multiply only by factor 1.
Example: RQB5X for diameter 1200.0 mm.
TSS Article No.: RQB5X1200-M12N.

Table LI Installation dimensions / TSS Part No

Rod Dia. d_N h9	Groove Dia. D_1 H9	Groove Width L_1 +0.2	TSS Part No.	O-Ring Sizes
18.0	**29.0**	**4.2**	**RQB200180**	**21.82 x 3.53**
20.0	**30.7**	**4.2**	**RQB200200**	**23.39 x 3.53**
22.0	**32.7**	**4.2**	**RQB200220**	**26.57 x 3.53**
25.0	**35.7**	**4.2**	**RQB200250**	**29.74 x 3.53**
28.0	**38.7**	**4.2**	**RQB200280**	**32.92 x 3.53**
30.0	40.7	4.2	RQB200300	34.52 x 3.53
32.0	**42.7**	**4.2**	**RQB200320**	**36.09 x 3.53**
35.0	45.7	4.2	RQB200350	37.69 x 3.53
36.0	**46.7**	**4.2**	**RQB200360**	**40.87 x 3.53**
40.0	**50.7**	**4.2**	**RQB200400**	**44.04 x 3.53**
40.0	**55.1**	**6.3**	**RQB300400**	**43.82 x 5.33**
42.0	52.7	4.2	RQB200420	47.22 x 3.53
42.0	57.1	6.3	RQB300420	46.99 x 5.33
45.0	**55.7**	**4.2**	**RQB200450**	**50.39 x 3.53**
45.0	**60.1**	**6.3**	**RQB300450**	**50.17 x 5.33**
48.0	58.7	4.2	RQB200480	51.50 x 3.55
48.0	63.1	6.3	RQB300480	53.34 x 5.33
50.0	**60.7**	**4.2**	**RQB200500**	**53.57 x 3.53**
50.0	**65.1**	**6.3**	**RQB300500**	**56.52 x 5.33**
52.0	62.7	4.2	RQB200520	56.74 x 3.53
52.0	67.1	6.3	RQB300520	56.52 x 5.33
55.0	65.7	4.2	RQB200550	59.92 x 3.53
55.0	70.1	6.3	RQB300550	59.69 x 5.33
56.0	**66.7**	**4.2**	**RQB200560**	**59.92 x 3.53**
56.0	**71.1**	**6.3**	**RQB300560**	**62.87 x 5.33**
60.0	70.7	4.2	RQB200600	63.09 x 3.53
60.0	75.1	6.3	RQB300600	66.04 x 5.33
63.0	**73.7**	**4.2**	**RQB200630**	**66.27 x 3.53**
63.0	**78.1**	**6.3**	**RQB300630**	**69.22 x 5.33**
65.0	80.1	6.3	RQB300650	69.22 x 5.33
70.0	80.7	4.2	RQB200700	75.79 x 3.53
70.0	**85.1**	**6.3**	**RQB300700**	**75.57 x 5.33**
75.0	85.7	4.2	RQB200750	78.97 x 3.53
75.0	90.1	6.3	RQB300750	81.92 x 5.33
80.0	90.7	4.2	RQB200800	85.32 x 3.53
80.0	**95.1**	**6.3**	**RQB300800**	**85.09 x 5.33**

Rod Dia. d_N h9	Groove Dia. D_1 H9	Groove Width L_1 +0.2	TSS Part No.	O-Ring Sizes
85.0	100.1	6.3	RQB300850	91.44 x 5.33
90.0	100.7	4.2	RQB200900	94.84 x 3.53
90.0	**105.1**	**6.3**	**RQB300900**	**94.62 x 5.33**
95.0	105.7	4.2	RQB200950	101.19 x 3.53
95.0	110.1	6.3	RQB300950	100.97 x 5.33
100.0	110.7	4.2	RQB201000	104.37 x 3.53
100.0	**115.1**	**6.3**	**RQB301000**	**107.32 x 5.33**
105.0	115.7	4.2	RQB201050	110.72 x 3.53
105.0	120.1	6.3	RQB301050	110.49 x 5.33
110.0	120.7	4.2	RQB201100	113.89 x 3.53
110.0	**125.1**	**6.3**	**RQB301100**	**116.84 x 5.33**
110.0	130.5	8.1	RQB401100	120.02 x 7.00
115.0	125.7	4.2	RQB201150	120.24 x 3.53
115.0	130.1	6.3	RQB301150	120.02 x 5.33
120.0	130.7	4.2	RQB201200	123.42 x 3.53
120.0	135.1	6.3	RQB301200	126.37 x 5.33
125.0	135.7	4.2	RQB201250	129.77 x 3.53
125.0	**140.1**	**6.3**	**RQB301250**	**129.54 x 5.33**
130.0	140.7	4.2	RQB201300	136.12 x 3.53
130.0	145.1	6.3	RQB301300	135.89 x 5.33
135.0	145.7	4.2	RQB201350	139.29 x 3.53
135.0	150.1	6.3	RQB301350	142.24 x 5.33
140.0	150.7	4.2	RQB201400	145.64 x 3.53
140.0	**155.1**	**6.3**	**RQB301400**	**145.42 x 5.33**
145.0	155.7	4.2	RQB201450	148.82 x 3.53
145.0	160.1	6.3	RQB301450	151.77 x 5.33
150.0	165.1	6.3	RQB301500	158.12 x 5.33
160.0	**175.1**	**6.3**	**RQB301600**	**164.47 x 5.33**
160.0	**180.5**	**8.1**	**RQB401600**	**170.82 x 7.00**
165.0	180.1	6.3	RQB301650	170.82 x 5.33
170.0	180.7	4.2	RQB201700	177.39 x 3.53
170.0	185.1	6.3	RQB301700	177.17 x 5.33
175.0	190.1	6.3	RQB301750	183.52 x 5.33
180.0	190.7	4.2	RQB201800	183.74 x 3.53
180.0	**195.1**	**6.3**	**RQB301800**	**183.52 x 5.33**
180.0	**200.5**	**8.1**	**RQB401800**	**189.87 x 7.00**

Rod Dia.	Groove Dia.	Groove Width	TSS Part No.	O-Ring Sizes
d_N h9	D_1 H9	L_1 +0.2		
190.0	200.7	4.2	RQB201900	196.44 x 3.53
190.0	205.1	6.3	RQB301900	196.22 x 5.33
200.0	215.1	6.3	RQB302000	208.92 x 5.33
200.0	**220.5**	**8.1**	**RQB402000**	**208.92 x 7.00**
210.0	225.1	6.3	RQB302100	215.27 x 5.33
220.0	235.1	6.3	RQB302200	227.97 x 5.33
220.0	**240.5**	**8.1**	**RQB402200**	**227.97 x 7.00**
230.0	245.1	6.3	RQB302300	234.32 x 5.33
230.0	250.5	8.1	RQB402300	240.67 x 7.00
240.0	255.1	6.3	RQB302400	247.02 x 5.33
240.0	260.5	8.1	RQB402400	253.37 x 7.00
250.0	**270.5**	**8.1**	**RQB402500**	**266.07 x 7.00**
260.0	284.0	8.1	RQB802600	266.07 x 7.00
270.0	290.5	8.1	RQB402700	278.77 x 7.00
270.0	294.0	8.1	RQB802700	278.77 x 7.00
280.0	300.5	8.1	RQB402800	291.47 x 7.00
280.0	**304.0**	**8.1**	**RQB802800**	**291.47 x 7.00**
300.0	324.0	8.1	RQB803000	316.87 x 7.00
320.0	**344.0**	**8.1**	**RQB803200**	**329.57 x 7.00**
350.0	370.5	8.1	RQB403500	354.97 x 7.00
350.0	374.0	8.1	RQB803500	367.67 x 7.00
360.0	**384.0**	**8.1**	**RQB803600**	**367.67 x 7.00**
400.0	420.5	8.1	RQB404000	417.96 x 7.00
400.0	424.0	8.1	RQB804000	417.96 x 7.00

Rod Dia.	Groove Dia.	Groove Width	TSS Part No.	O-Ring Sizes
d_N h9	D_1 H9	L_1 +0.2		
450.0	474.0	8.1	RQB804500	468.76 x 7.00
500.0	524.0	8.1	RQB805000	506.86 x 7.00
550.0	574.0	8.1	RQB805500	557.66 x 7.00
600.0	624.0	8.1	RQB806000	608.08 x 7.00
650.0	677.3	9.5	RQB506500	663 x 8.40
700.0	724.0	8.1	RQB807000	712 x 7.00
800.0	827.3	9.5	RQB508000	813 x 8.40
900.0	927.3	9.5	RQB509000	913 x 8.40
1000.0	1027.3	9.5	RQB5X1000	1013 x 8.40
1000.0	1038.0	13.8	RQB6X1000	1016 x 12.00
1100.0	1138.0	13.8	RQB6X1100	1116 x 12.00
1200.0	1227.3	9.5	RQB5X1200	1213 x 8.40
1200.0	1238.0	13.8	RQB6X1200	1216 x 12.00
1300.0	1338.0	13.8	RQB6X1300	1316 x 12.00
1500.0	1538.0	13.8	RQB6X1500	1516 x 12.00
2000.0	2038.0	13.8	RQB6X2000	2016 x 12.00
2200.0	2238.0	13.8	RQB6X2200	2216 x 12.00

The rod diameters in **bold** type are in accordance with the recommendations of ISO 3320.
Other dimensions and all intermediate sizes up to 2200 mm diameter, including imperial (inch) sizes converted to mm, can be supplied.
All O-Rings with 12 mm cross section are delivered as special profilring.

Turcon® AQ-Seal® 5 with Bean Seal

Double Acting

Rubber Energized Plastic Faced Seal

Material:
Turcon® and Zurcon®

■ Turcon® AQ-Seal® 5 with Bean Seal

Description

The Turcon® AQ-Seal® 5 with Bean Seal is a patented development of the proven standard Turcon® AQ-Seal®.

The seal profile of the Turcon® ring has been redesigned on both the dynamic and static sealing surface. Two O-Rings are used to energize the seal instead of one.

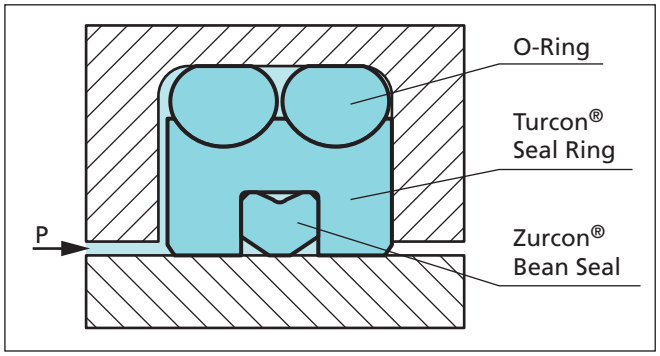

Figure 72 Turcon® AQ-Seal® 5 with Bean Seal

The AQ-Seal® 5 with Bean Seal combines the benefits of a low-friction Turcon® slipper seal with the high sealing characteristics of an elastomeric seal by incorporating a limited foot print Bean Seal in the dynamic sealing face.

This optimizes leakage control while minimizing friction. The particular characteristics of the AQ-Seal® 5 with Bean Seal are the special seal profile with a defined seal edge and the use of two O-Rings as energizing elements to optimize the pressure profile and to reduce the force of attack at gas permeability.

* Patent-No. EP 0 424 372

Advantages

- High sealing effect in applications requiring media separation, e.g. fluid/fluid or fluid/gas
- Double security through the combination of low-friction special materials with elastomer seals
- Higher pressure application, higher sliding speed compared to the AQ-Seal®
- Outstanding sliding properties, no stick-slip effect.
- Available for any rod diameters from 32 and up to 2200 mm

Application Examples

- Mobil hydraulic
- Presses
- Stabilizers
- Heavy duty suspension cylinders
- Medium separation of fluid /fluid or fluid/gas; please note that one of the media must be lubricating
- Hydro-pneumatic suspensions for heavy vehicles
- Cylinders with retaining function over longer periods such as jacks and support cylinders.

Technical Data

Operating conditions:

Pressure:	Up to 60 MPa with mineral oil Up to 40 MPa for media with reduced lubricating properties
Speed:	Up to 3 m/s with reciprocating movements
Temperature:	-45 °C to +110 °C (depending on seal and O-Ring material)
Media:	Mineral oil-based hydraulic fluids, HEES, HETG and flame retardant hydraulic fluids HFA, HFC up to +60 °C, phosphate ester and others, depending on temperature, O-Ring and Bean Seal material compatibility (see Table LII).
Clearance:	The maximum permissible radial clearance S_{max} is shown in Table LIII as a function of the operating pressure and functional diameter.

Important Note:
The above data are maximum values and cannot be used at the same time. e.g. the maximum operating speed depends on material type, pressure, temperature and gap value.
Temperature range also dependent on medium.

Materials

The following material combinations have proven effective for hydraulic applications:

All round material for hydraulic applications with reciprocating, short stroke or helical movements in mineral oils, flame retardant hydraulic fluids HFC, phosphate ester, bio-oils or fluids having less satisfactory lubricating properties:

Turcon® AQ-Seal® 5:	Turcon® M12	
Bean Seal:	Zurcon® Z52	
O-Ring:	NBR, 70 Shore A	N
	FKM, 70 Shore A	V
Set code:	M12N or M12V	

For medium to heavy applications with reciprocating movements in mineral oils and other media with good lubrication:

Turcon® AQ-Seal® 5:	Turcon® T46	
Bean Seal:	Zurcon® Z52	
O-Ring:	NBR, 70 Shore A	N
	FKM, 70 Shore A	V
Set code:	T46N or T46V	

For specific applications, all Turcon® materials are available.
Other viable material combinations are listed in Table LII.

Table LII Recommended Turcon® Materials for Turcon® AQ-Seal® 5 Bean Seal

Material, Applications, Properties	Code	O–Ring Material Shore A	Code	O-Ring Operating Temp.* °C	Mating Surface Material	MPa max. Dyna-mic
Turcon® M12 First material choice for seals in linear motion Overall improved properties For new constructions and updating For all commonly applied hydraulic fluids including fluds with low lubrication performance Lowest friction and best sliding properties Loweset wear on seals Improved absorption of abrasive cintainments No wear or abrasion of counter surfcae Mineal fibre and Additives filled Colour: Dark grey	M12	NBR- 70	N	-30 to +100	Steel Steel hardened Steel chrome plated (rod) Steel plated (rod) Cast iron Stainless steel Titanium	50
		NBR- 70 Low temp.	T	-45 to +80		
		FKM- 70	V	-10 to (+200)		
Turcon® T08 For lubricating fluids and linear motion Very high compressive strength and extrusion resistance Hard counter surfaces is recommended Bronze filled Colour: Light to dark brown, which may have variations in shading	T08	NBR- 70	N	-30 to +100	Steel hardened Steel chrome plated (rod) Cast iron	60
		NBR- 70 Low temp.	T	-45 to +80		
		FKM- 70	V	-10 to (+200)		
Turcon® T10 For hydraulic and pneumatic For linear motion in lubricating and non-lubricating fluids High extrusion resistance Good chemical resistance Not for electrically conducting fluids Carbon, graphite filled Colour: Black	T10	NBR- 70	N	-30 to +100	Steel Steel chrome plated (rod) Stainless steel	40
		NBR- 70 Low temp.	T	-45 to +80		
		FKM- 70	V	-10 to (+200)		
Turcon® T29 For lubricating and non-lubricating fluids Good extrusion resistance Surface texture is not suitable for gas sealing Not for electrically conducting fluids Carbon fibre filled Colour: Grey	T29	NBR- 70	N	-30 to +100	Steel Steel chrome plated (rod) Cast iron Stainless steel	30
		NBR- 70 Low temp.	T	-45 to +80		
		FKM- 70	V	-10 to (+200)		
Turcon® T40 For lubricating and non-lubricating fluids High frequency and short strokes Water hydraulics Surface texture is not suitable for gas sealing Carbon fibre filled Colour: Grey.	T40	NBR- 70	N	-30 to +100	Steel Steel chrome plated (rod) Cast iron Stainless steel Aluminium	25
		NBR- 70 Low temp.	T	-45 to +80		
		FKM- 70	V	-10 to (+200)		
Turcon® T46 For lubricated hydraulics in linear motion High compressive strength High extrusion resistance Very good sliding and wear properties Bronze filled Colour: Light to dark brown, which may have variations in shading.	T46	NBR- 70	N	-30 to +100	Steel hardened Steel chrome plated (rod) Cast iron	50
		NBR- 70 Low temp.	T	-45 to +80		
		FKM- 70	V	-10 to (+200)		

Turcon® AQ-Seal® 5 Bean Seal

Material, Applications, Properties	Code	O–Ring Material Shore A	Code	O-Ring Operating Temp.* °C	Mating Surface Material	MPa max. Dyna-mic
Zurcon® Z80 For lubrication and non-lubrication fluids Water based fluids, air and gases Dry air pneumatics High abrasion and extrusion resistance For service in abrasive conditions and media with particles Good chemical resistance Limited temperature capability (-60 to +80 °C) UHMWPE (Ultra High Molecular Weight Polyethylene) Colour: White to off-white	Z80	NBR- 70	N	-30 to (+100)	Steel Steel hardened Steel chrome plated (rod) Stainless steel Aluminium Ceramic coating	35
		NBR- 70 Low temp.	T	-45 to +80		

* The O-Ring Operation Temperature is only valid in mineral hydraulic oil (except EPDM). ** Material not suitable for mineral oils.
BAM: Tested by "Bundesanstalt Materialprüfung, Germany". Highlighted materials are standard.

Installation Recommendation

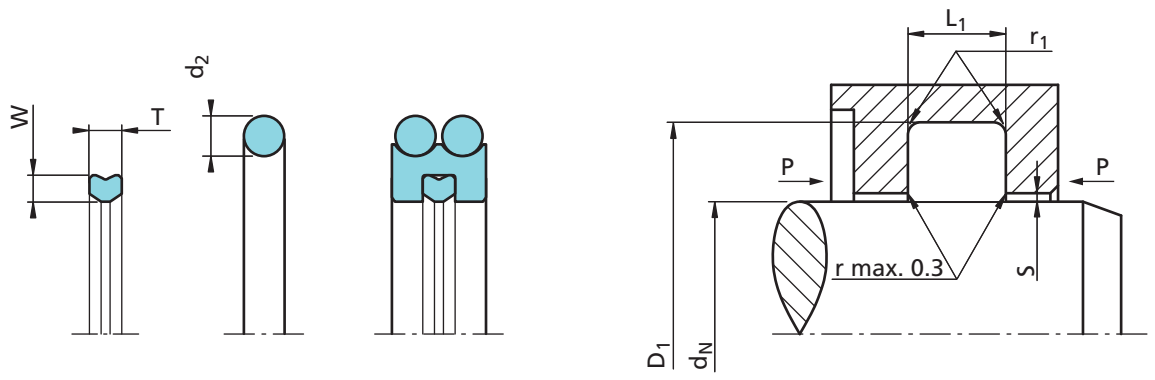

Figure 73 Installation drawing

Table LIII Installation dimensions – Standard installation

Series No.	Rod Diameter d_N f8/h9		Groove Diameter	Groove Width	Radius	Radial Clearance S max*			O-Ring Cross Sec.	Bean Seal Cross Sec.	
	Standard Application	Available Range	D_1 H9	L_1 +0.2	r_1	10 MPa	20 MPA	40 MPa	d_2	W	T
RQC10	40 - 79.9	32 - 250.0	d_N + 10.0	6.3	0.6	0.30	0.20	0.15	2.62	1.70	1.70
RQC20	80 - 132.9	50 - 450.0	d_N + 13.0	8.3	1.0	0.40	0.30	0.15	3.53	2.45	2.45
RQC30	133 - 462.9	80 - 650.0	d_N + 18.0	12.3	1.3	0.40	0.30	0.20	5.33	3.50	3.65
RQC40	190 - 999.9	180 - 199.9	d_N + 31.0	16.3	1.8	0.50	0.40	0.30	7.00	5.20	5.05
RQC4X	1000 - 2200.0	-	d_N + 31.0	16.3	1.8	0.50	0.40	0.30	7.00	5.20	5.05

*At pressures > 40 MPa use diameter tolerance H8/f8 (bore/rod) in area of the seal or use Turcon® AQ-Seal® 5 CR.
TSS Slydring®/Wear Rings are not applicable at very small radial clearance; consult the Slydring® catalog.
All AQ-Seal® 5 supplied without Bean Seals must have "W" in the 5th character.

Ordering example

Turcon® AQ-Seal® 5 complete with Bean Seal and O-Rings, standard application:

Series: RQC20 (from Table LIII)
Rod diameter: d_N = 80.0 mm
TSS Part No.: RQC200800 (from Table LIV)

Select the material from Table LII. The corresponding code numbers are appended to the TSS Part No. Together these form the TSS Article Number.

The TSS Article Number for all intermediate sizes not shown in Table LIV can be determined following the example below.

TSS Article No. RQC2 0 0800 - M12 N

- Series No. — RQC2
- Type (Standard) — 0
- Rod diameter x 10* — 0800
- Quality Index (Standard) — -
- Material Code (Seal Ring) — M12
- Material Code (O-Ring) — N

* For diameters ≥ 1000.0 mm multiply only by factor 1.
Example: RQC4X for diameter 1200.0 mm.
TSS Article No.: RQC4X1200-M12N.

Table LIV Installation dimensions / TSS Part No

Bore Dia. d_N f8/h9	Groove Dia. D_1 H9	Groove Width L_1 +0.2	TSS Part No.	O-Ring Dimensions 2 of
40.0	**50.0**	**6.3**	**RQC100400**	**44.12 x 2.62**
42.0	52.0	6.3	RQC100420	47.29 x 2,62
45.0	55.0	6.3	RQC100450	50.47 x 2.62
48.0	58.0	6.3	RQC100480	52.07 x 2.62
50.0	**60.0**	**6.3**	**RQC100500**	**55.25 x 2.62**
50.0	**63.0**	**8.3**	**RQC200500**	**56.74 x 3.53**
52.0	62.0	6.3	RQC100520	56.82 x 2.62
55.0	65.0	6.3	RQC100550	59.99 x 2.62
56.0	**66.0**	**6.3**	**RQC100560**	**61.60 x 2.62**
56.0	**69.0**	**8.3**	**RGC200560**	**63.09 x 3.53**
60.0	70.0	6.3	RQC100600	64.77 x 2.62
60.0	73.0	8.3	RQC200600	66.27 x 3.53
63.0	**73.0**	**6.3**	**RQC100630**	**67.95 x 2.62**
63.0	**76.0**	**8.3**	**RQC200630**	**69.44 x 3.53**
65.0	75.0	6.3	RQC100650	69.52 X 2.62
70.0	80.0	6.3	RQC100700	75.87 X 2.62
70.0	83.0	8.3	RQC200700	75.79 X 3.53
75.0	85.0	6.3	RQC100750	82.22 X 2.62
75.0	88.0	8.3	RQC200750	82.14 X 3.53
80.0	**90.0**	**6.3**	**RQC100800**	**82.22 x 2.62**
80.0	**93.0**	**8.3**	**RQC200800**	**85.32 x 3.53**
85.0	98.0	8.3	RQC200850	91.67 x 3,53
90.0	100.0	6.3	RQC100900	94.92 x 2.62
90.0	103.0	8.3	RQC200900	94.84 x 3.53
95.0	108.0	8.3	RQC200950	101.19 x 3.53
100.0	**110.0**	**6.3**	**RQC101000**	**101.27 x 2.62**
100.0	**113.0**	**8.3**	**RQC201000**	**104.37 x 3.53**
105.0	118.0	8.3	RQC201050	110.72 x 3.53
110.0	120.0	6.3	RQC101100	113.97 x 2.62
110.0	123.0	8.3	RQC201100	117.07 x 3.53
115.0	128.0	8.3	RQC201150	120,24 x 3,53
120.0	133.0	8.3	RQC201200	126.59 x 3.53
120.0	138.0	12.3	RQC301200	126.37 x 5.33
125.0	**138.0**	**8.3**	**RQC201250**	**129.77 x 3.53**
125.0	**143.0**	**12.3**	**RQC301250**	**132.72 x 5.33**
130.0	143.0	8.3	RQC201300	136.12 x 3.53

Bore Dia. d_N f8/h9	Groove Dia. D_1 H9	Groove Width L_1 +0.2	TSS Part No.	O-Ring Dimensions 2 of
130.0	148.0	12.3	RQC301300	135.89 x 5.33
135.0	148.0	8.3	RQC201350	139.29 x 3.53
135.0	153.0	12.3	RQC301350	142.24 x 5.33
140.0	158.0	12.3	RQC301400	145.42 x 5.33
150.0	168.0	12.3	RQC301500	158.12 x 5.33
160.0	**173.0**	**8.3**	**RQC201600**	**164.69 x 3.53**
160.0	**178.0**	**12.3**	**RQC301600**	**164.47 x 5.33**
170.0	188.0	12.3	RQC301700	177.17 x 5.33
180.0	198.0	12.3	RQC301800	183.52 x 5.33
190.0	208.0	12.3	RQC301900	196.22 x 5.33
200.0	**218.0**	**12.3**	**RQC302000**	**208.92 x 5.33**
220.0	238.0	12.3	RQC302200	227.97 x 5.33
230.0	248.0	12.3	RQC302300	234.32 x 5.33
240.0	258.0	12.3	RQC302400	247.02 x 5.33
250.0	**258.0**	**12.3**	**RQC302500**	**253.37 x 5.33**
280.0	298.0	12.3	RQC302800	291.47 x 5.33
300.0	318.0	12.3	RQC303000	304.17 x 5.33
320.0	**338.0**	**12.3**	**RQC303200**	**329.57 x 5.33**
350.0	368.0	12.3	RQC303500	354.97 x 5.33
400.0	**418.0**	**12.3**	**RQC304000**	**405.26 x 5.33**
420.0	438.0	12.3	RQC304200	430.66 x 5.33
450.0	468.0	12.3	RQC304500	456.06 x 5.33
465.0	496.0	16.3	RQC404650	481.38 x 7.00
480.0	511.0	16.3	RQC404800	494.16 x 7.00
500.0	**531.0**	**16.3**	**RQC405000**	**506.86 x 7.00**
550.0	581.0	16.3	RQC405500	557.66 x 7.00
600.0	631.0	16.3	RQC406000	608.08 x 7.00
650.0	681.0	16.3	RQC406500	668 x 7.00
700.0	731.0	16.3	RQC407000	718 x 7.00
750.0	781.0	16.3	RQC407500	768 x 7.00
800.0	831.0	16.3	RQC408000	818 x 7.00
850.0	881.0	16.3	RQC408500	868 x 7.00
900.0	931.0	16.3	RQC409000	918 x 7.00
950.0	981.0	16.3	RQC409500	968 x 7.00
1000.0	1031.0	16.3	RQC4X1000	1018 x 7.00
1050.0	1081.0	16.3	RQC4X1050	1068 x 7.00

Bore Dia.	Groove Dia.	Groove Width	TSS Part No.	O-Ring Dimensions 2 of
d_N f8/h9	D_1 H9	L_1 +0.2		
1200.0	1231.0	16.3	RQC4X1200	1218 x 7.00
1300.0	1331.0	16.3	RQC4X1300	1318 x 7.00
1400.0	1431.0	16.3	RQC4X1400	1418 x 7.00
1500.0	1531.0	16.3	RQC4X1500	1518 x 7.00
2000.0	2031.0	16.3	RQC4X2000	2018 x 7.00
2200.0	2231.0	16.3	RQC4X2200	2218 x 7.00

The rod diameters in **bold** type are in accordance with the recommendations of ISO 3320.
Other dimensions and all intermediate sizes up to 2200 mm diameter, including imperial (inch) sizes converted to mm, can be supplied.

Zurcon® Wynseal M

Double Acting

Rubber Energized Plastic Faced Seal

Material:
Turcon® and Zurcon®

■ Zurcon® Wynseal M

Description

The Zurcon® Wynseal M for rod sealing is a machined Wynseal version in Zurcon® or Turcon® materials.

The Zurcon® Wynseal M is a double-acting seal consisting of a Zurcon® or Turcon® seal ring and an O-Ring as energizing element - see Figure 74.

The seal is designed with a seal edge profile. Two external seal edges act as primary seal for pressures from both sides and prevent any build-up of hydrodynamic pressure over the seal profile and the risk of the blow-by effect. The central sealing and supporting bulge increases the sealing effect *. Notches are provided on both sides on the plane surfaces to provide activation of the energizing O-Ring. These ensure direct pressure loading of the seal under all operating conditions.

Installation groove is identical to that for the Turcon® Glyd Ring®.

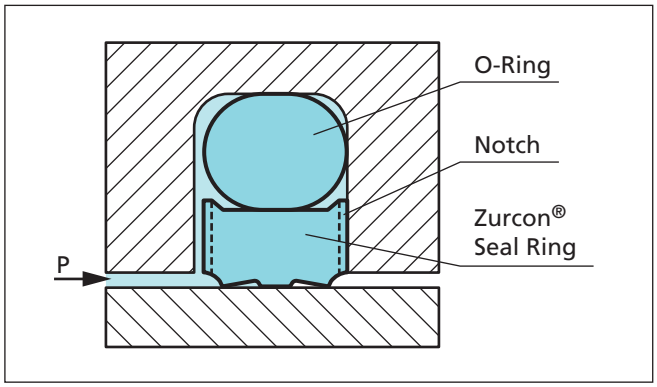

Figure 74 Zurcon® Wynseal M

* Only from RW52 and the following Series No.; PW50 is without seal edge profile and PW51 is without supporting bulge.

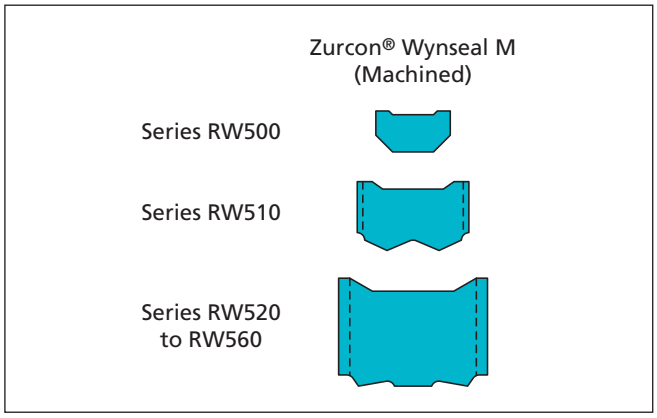

Figure 75 Zurcon® Wynseal M series profile

Advantages

- High static and dynamic sealing effect
- High abrasion resistance (Zurcon® materials)
- Simple groove design, one-piece piston possible
- Diameter range - from 3 to 2600 mm
- Suitable for grooves to ISO 7425/2
- For lower friction
- Higher temperature
- Higher pressure
- Better chemical resistance

Application Examples

The Zurcon® Wynseal M recommended for double acting rod seal for hydraulic components in various sectors such as:

- Machine tools
- Forklifts & handling machinery
- Agriculture
- Industrial hydraulic light to medium duty

Technical Data

Operating conditions:

Pressure:	Up to 50 MPa
Speed:	Up to 10 m/s
Temperature:	-45 °C to +200 °C (depending on seal and O-Ring material)
Media:	Mineral oil-based hydraulic fluids, flame retardant hydraulic fluids, environmentally safe hydraulic fluids (bio-oils), phosphate ester, water and others, depending on the O-Ring material compatibility - see Table LV.
Clearance:	The maximum permissible radial clearance S_{max} is shown in Table LVI, as a function of the operating pressure and functional diameter.

Important Note:
The above data are maximum values and cannot be used at the same time. e.g. the maximum operating speed depends on material type, pressure, temperature and gap value.
Temperature range also dependent on medium.

Installation

Zurcon® Wynseal® is installed according to information at page 11 to 12.

Closed groove installation applies same dimensions as for Turcon® Stepseal® 2K at Table IV page 12.

Materials

The following material combinations have proven effective for hydraulic applications:

For light to medium applications with reciprocating movements in mineral oils and other media with good lubrication:

Turcon® Wynseal M:	Zurcon® Z52
O-Ring:	NBR, 70 Shore A N
Set code:	Z52N

All round material for hydraulic applications with reciprocating, short stroke or helical movements in mineral oils, flame retardant hydraulic fluids HFC, phosphate ester, bio-oils or fluids having less satisfactory lubricating properties:

Turcon® Wynseal M:	Turcon® M12
O-Ring:	NBR, 70 Shore A N FKM, 70 Shore A V
Set code:	M12N or M12V

For specific applications, all Turcon® materials are available.

Other viable material combinations are listed in Table LV.

Table LV Turcon® and Zurcon® Materials for Zurcon® Wynseal M

Material, Applications, Properties	Code	O-Ring Material Shore A	Code	O-Ring Operating Temp.*°C	Mating Surface Material	MPa max. Dyna-mic
Turcon® M12 First material choice for seals in linear motion Overall improved properties For new constructions and updating For all commonly applied hydraulic fluids including fluids with low lubrication performance Lowest friction and best sliding properties Lowest wear on seals Improved absorption of abrasive contaminants No wear or abrasion of counter surface Mineral fibre and Additives filled Colour: Dark grey	M12	NBR- 70	N	-30 to +100	Steel Steel hardened Steel chrome plated (rod) Steel plated (rod) Cast iron Stainless steel Titanium	35
		NBR- 70 Low temp.	T	-45 to +80		
		FKM- 70	V	-10 to +200		
Turcon® T08 For lubricating fluids and linear motion Very high compressive strength and extrusion resistance Hard counter surfaces is recommended Bronze filled Colour: Light to dark brown, which may have variations in shading	T08	NBR- 70	N	-30 to +100	Steel hardened Steel chrome plated (rod) Cast iron	50
		NBR- 70 Low temp.	T	-45 to +80		
		FKM- 70	V	-10 to +200		
Turcon® T40 For lubricating and non-lubricating fluids High frequency and short strokes **Water hydraulics** Surface texture is not suitable for gas sealing Carbon fibre filled Colour: Grey	T40	NBR- 70	N	-30 to +100	Steel Steel hardened Steel chrome plated (rod) Cast iron Stainless steel Aluminium	25
		NBR- 70 Low temp.	T	-45 to +80		
		FKM- 70	V	-10 to +200		
		EPDM- 70	E**	-45 to +145		
Turcon® T46 For lubricated hydraulics in linear motion High compressive strength High extrusion resistance Very good sliding and wear properties BAM tested Bronze filled Colour: Light to dark brown, which may have variations in shading..	T46	NBR- 70	N	-30 to +100	Steel hardened Steel chrome plated (rod) Cast iron	35
		NBR- 70 Low temp.	T	-45 to +80		
		FKM- 70	V	-10 to +200		
Zurcon® Z51*** For mineral oil based fluids **Very high abrasion and extrusion resistance** For counter surface with rougher surface finish Limited chemical resistance Max. working temperature 110 °C Cast polyurethane Colour: Yellow to light-brown	Z51	NBR- 70	N	-30 to +100	Steel Steel hardened Steel chrome plated (rod) Cast iron Stainless steel Ceramic coating	45
		NBR- 70 Low temp.	T	-45 to +80		

* The O-Ring Operation Temperature is only valid in mineral hydraulic oil - except EPDM. ** Material not suitable for mineral oils.
*** Max. ø 2200 mm BAM Tested by "Bundesanstalt Materialprüfung, Germany". Highlighted materials are standard.

Zurcon® Wynseal M

Material, Applications, Properties	Code	O-Ring Material Shore A	Code	O-Ring Operating Temp.*°C	Mating Surface Material	MPa max. Dyna-mic
Zurcon® Z52*** For mineral oil based fluids High abrasion resistance For counter surface with rougher surface finish Good extrusion resistance Limited chemical resistance Max. working temperature 110 °C Cast polyurethane Colour: Turquoise	Z52	NBR- 70	N	-30 to +100	Steel Steel hardened Steel chrome plated (rod) Cast iron Stainless steel Ceramic coating	25
		NBR- 70 Low temp.	T	-45 to +80		
Zurcon® Z80 For lubricating and non-lubricating fluids Water based fluids, air and gases Dry air pneumatics High abrasion and extrusion resistance For service in abrasive conditions and media with particles Good chemical resistance Limited temperature capability (-60 to +80 °C) UHMWPE (Ultra High Molecular Weight Polyethylene) Colour: White to off-white	Z80	NBR- 70	N	-30 to (+100)	Steel Steel hardened Steel chrome plated (rod) Stainless steel Aluminium Bronze Ceramic coating	30
		NBR- 70 Low temp.	T	-45 to +80		
		EPDM- 70	E**	-45 to(+145)		

* The O-Ring Operation Temperature is only valid in mineral hydraulic oil - except EPDM. ** Material not suitable for mineral oils.
*** Max. ø 2200 mm BAM Tested by "Bundesanstalt Materialprüfung, Germany". Highlighted materials are standard.

■ Installation Recommendation

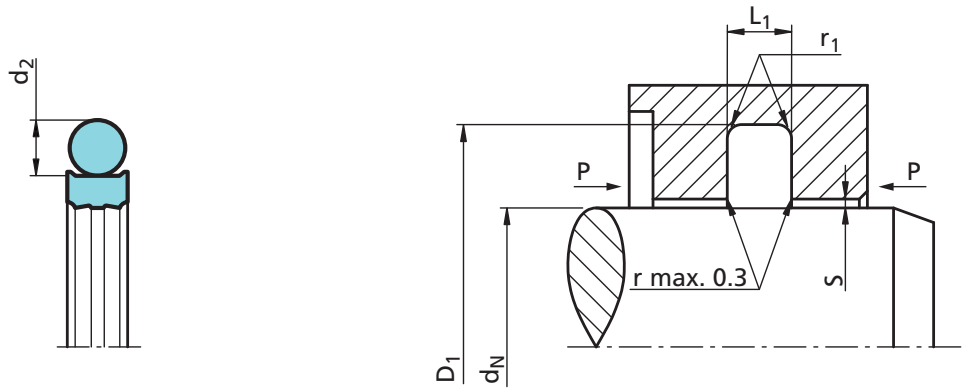

Figure 76 Installation drawing

Table LVI Installation dimensions - Standard recommendations

Series No.	Recommended diameter range	Available range	Groove Diameter*	Groove width	Radius	Radial Clearance S max.**			O-Ring Cross-Section
	d_N f8/h9	d_N f8/h9	D_1 H9	L_1 +0.2/-0	r_1	10 MPa	20 MPa	40 MPa	d_2
RW500	3 - 7.9	3 - 130.0	D_1 + 4.9	2.20	0.4	0.40	0.30	0.20	1.78
RW510	8 - 18.9	8 - 250.0	D_1 + 7.3	3.20	0.6	0.60	0.50	0.30	2.65
RW520	19 - 37.9	8 - 450.0	D_1 + 10.7	4.20	1.0	0.70	0.50	0.30	3.53
RW530	38 - 199.9	19 - 650.0	D_1 + 15.1	6,30	1.3	0.80	0.60	0.40	5.33
RW540	200 - 255.9	38 - 650.0	D_1 + 20.5	8,10	1.8	0.80	0.60	0.40	7.00
RW580	256 - 649.9	200 - 999.9	D_1 + 24.0	8,10	1.8	0.90	0.35	0.50	7.00
RW550	650 - 999.9	256 - 999.9	D_1 + 27.3	9,50	2.5	1.00	0.80	0.60	8.40
RW55X	1000 - 1200	-	D_1 + 27.3	9,50	2.5	1.00	0.80	0.60	8.40
RW560**	-	650 - 999.9	D_1 + 38.0	13.80	3.0	1.20	0.90	0.70	12.00
RW56X**	1000 - 2600***	-	D_1 + 38.0	13.80	3.0	1.20	0.90	0.70	12.00

* Installation with groove dimensions to ISO 7425/2 is also recommendable.
** At pressure > 40 MPa use diameter tolerance h8/F8 (rod/bore) in area of the seal or consult TSS for alternative material or profiles. TSS Slydring®/Wear Rings are not applicable at very small radial clearance; consult the Slydring® catalog.
** O-Rings with 12 mm cross section are delivered as special profilring. *** Z51 and Z52 max ø 2200 mm.

Ordering example

Zurcon® Wynseal M complete with O-Ring, standard application;

Series: RW540 (from Table LVI).
Rod diameter: d_N = 250.0 mm.
TSS Part No.: RW5402500 (from Table LVII).

Select the material from Table LV.
The corresponding code numbers are appended to the TSS Part No. Together these form the TSS Article Number.

The TSS Article Number for all intermediate sizes not shown in Table LVII can be determined following the example.

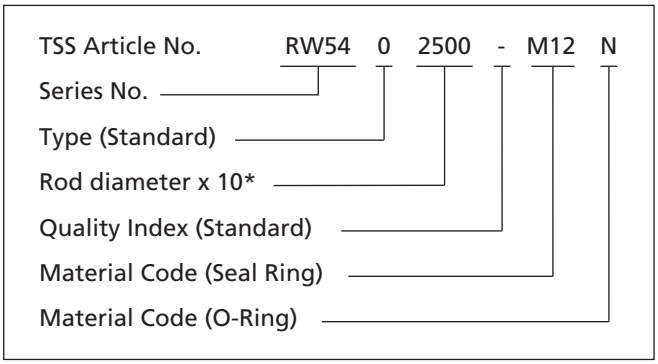

* For diameters ≥ 1000.0 mm multiply only by factor 1.
Example: RW56X for diameter 1200.0 mm.
TSS Article No.: RW56X1200 - M12N.

Table LVII Installation dimensions / TSS Part No.

Rod	Groove Dia.	Groove Width	TSS Part No.	O-ring Sizes
d_N f8/h9	D_1 H9	L_1 +0.2		
3.0	7.9	2.2	RW5000030	4.47 x 1.78
4.0	**8.9**	**2.2**	**RW5000040**	**5.6 x 1.80**
5.0	**9.9**	**2.2**	**RW5000050**	**6.70 x 1.80**
6.0	**10.9**	**2.2**	**RW5000060**	**7.65 x 1.78**
8.0	**12.9**	**2.2**	**RW5000080**	**9.50 x 1.80**
8.0	**15.3**	**3.2**	**RW5100080**	**10.77 x 2.62**
10.0	**14.9**	**2.2**	**RW5000100**	**11.80 x 1.80**
10.0	**17.3**	**3.2**	**RW5100100**	**12.37 x 2.62**
12.0	**16.9**	**2.2**	**RW5000120**	**14.00 x 1.78**
12.0	**19.3**	**3.2**	**RW5100120**	**13.94 x 2.62**
14.0	**18.9**	**2.2**	**RW5000140**	**15.60 x 1.78**
14.0	**21.3**	**3.2**	**RW5100140**	**17.12 x 2.62**
15.0	19.9	2.2	RW5000150	17.17 x 1.78
15.0	22.3	3.2	RW5100150	17.12 x 2.62
16.0	20.9	2.2	RW5000160	17.17 x 1.78
16.0	**23.3**	**3.2**	**RW5100160**	**18.72 x 2.62**
18.0	22.9	2.2	RW5000180	20.35 x 1.78
18.0	**25.3**	3.2	**RW5100180**	**20.29 x 2.62**
20.0	**27.3**	**3.2**	**RW5100200**	**21.89 x 2.62**
20.0	**30.7**	**4.2**	**RW5200200**	**23.39 x 3.53**
22.0	**29.3**	**3.2**	**RW5100220**	**25.07 x 2.62**
22.0	**32.7**	**4.2**	**RW5200220**	**26.57 x 3.53**
25.0	**32.3**	**3.2**	**RW5100250**	**28.24 x 2.62**
25.0	**35.7**	**4.2**	**RW5200250**	**29.74 x 3.53**
28.0	35.3	3.2	RW5100280	29.82 x 2.62
28.0	**38.7**	**4.2**	**RW5200280**	**32.92 x 3.53**
30.0	37.3	3.2	RW5100300	32.99 x 2.62
30.0	40.7	4.2	RW5200300	34.52 x 3.53
32.0	39.3	3.2	RW5100320	34.59 x 2.62
32.0	**42.7**	**4.2**	**RW5200320**	**36.09 x 3.53**
35.0	42.3	3.2	RW5100350	37.77 x 2.62
35.0	45.7	4.2	RW5200350	37.69 x 3.53
36.0	43.3	3.2	RW5100360	39.34 x 2.62
36.0	**46.7**	**4.2**	**RW5200360**	**40.87 x 3.53**
40.0	**50.7**	**4.2**	**RW5200400**	**44.04 x 3.53**
40.0	**55.1**	**6.3**	**RW5300400**	**43.82 x 5.33**

Rod	Groove Dia.	Groove Width	TSS Part No.	O-ring Sizes
d_N f8/h9	D_1 H9	L_1 +0.2		
42.0	52.7	4.2	RW5200420	47.22 x 3.53
42.0	57.1	6.3	RW5300420	46.99 x 5.33
45.0	**55.7**	**4.2**	**RW5200450**	**50.39 x 3.53**
45.0	**60.1**	**6.3**	**RW5300450**	**50.17 x 5.33**
48.0	58.7	4.2	RW5200480	51.50 x 3.55
48.0	63.1	6.3	RW5300480	53.34 x 5.33
50.0	**60.7**	**4.2**	**RW5200500**	**53.57 x 3.53**
50.0	**65.1**	**6.3**	**RW5300500**	**56.52 x 5.33**
52.0	62.7	4.2	RW5200520	56.74 x 3.53
52.0	67.1	6.3	RW5300520	56.52 x 5.33
55.0	65.7	4.2	RW5200550	59.92 x 3.53
55.0	70.1	6.3	RW5300550	59.69 x 5.33
56.0	**66.7**	**4.2**	**RW5200560**	**59.92 x 3.53**
56.0	**71.1**	**6.3**	**RW5300560**	**62.87 x 5.33**
60.0	70.7	4.2	RW5200600	63.09 x 3.53
60.0	75.1	6.3	RW5300600	66.04 x 5.33
63.0	**73.7**	**4.2**	**RW5200630**	**66.27 x 3.53**
63.0	**78.1**	**6.3**	**RW5300630**	**69.22 x 5.33**
65.0	80.1	6.3	RW5300650	69.22 x 5.33
70.0	80.7	4.2	RW5200700	75.79 x 3.53
70.0	**85.1**	**6.3**	**RW5300700**	**75.57 x 5.33**
75.0	85.7	4.2	RW5200750	78.97 x 3.53
75.0	90.1	6.3	RW5300750	81.92 x 5.33
80.0	90.7	4.2	RW5200800	85.32 x 3.53
80.0	**95.1**	**6.3**	**RW5300800**	**85.09 x 5.33**
85.0	100.1	6.3	RW5300850	91.44 x 5.33
90.0	100.7	4.2	RW5200900	94.84 x 3.53
90.0	**105.1**	**6.3**	**RW5300900**	**94.62 x 5.33**
95.0	105.7	4.2	RW5200950	101.19 x 3.53
95.0	110.1	6.3	RW5300950	100.97 x 5.33
100.0	110.7	4.2	RW5201000	104.37 x 3.53
100.0	**115.1**	**6.3**	**RW5301000**	**107.32 x 5.33**
105.0	115.7	4.2	RW5201050	110.72 x 3.53
105.0	120.1	6.3	RW5301050	110.49 x 5.33
110.0	120.7	4.2	RW5201100	113.89 x 3.53
110.0	**125.1**	**6.3**	**RW5301100**	**116.84 x 5.33**

Rod	Groove Dia.	Groove Width	TSS Part No.	O-ring Sizes
d_N f8/h9	D_1 H9	L_1 +0.2		
110.0	130.5	8.1	RW5401100	120.02 x 7.00
115.0	125.7	4.2	RW5201150	120.24 x 3.53
115.0	130.1	6.3	RW5301150	120.02 x 5.33
120.0	130.7	4.2	RW5201200	123.42 x 3.53
120.0	135.1	6.3	RW5301200	126.37 x 5.33
125.0	135.7	4.2	RW5201250	129.77 x 3.53
125.0	**140.1**	**6.3**	**RW5301250**	**129.54 x 5.33**
130.0	140.7	4.2	RW5201300	136.12 x 3.53
130.0	145.1	6.3	RW5301300	135.89 x 5.33
135.0	145.7	4.2	RW5201350	139.29 x 3.53
135.0	150.1	6.3	RW5301350	142.24 x 5.33
140.0	150.7	4.2	RW5201400	145.64 x 3.53
140.0	**155.1**	**6.3**	**RW5301400**	**145.42 x 5.33**
145.0	155.7	4.2	RW5201450	148.82 x 3.53
145.0	160.1	6.3	RW5301450	151.77 x 5.33
150.0	165.1	6.3	RW5301500	158.12 x 5.33
160.0	**175.1**	**6.3**	**RW5301600**	**164.47 x 5.33**
160.0	**180.5**	**8.1**	**RW5401600**	**170.82 x 7.00**
165.0	180.1	6.3	RW5301650	170.82 x 5.33
170.0	180.7	4.2	RW5201700	177.39 x 3.53
170.0	185.1	6.3	RW5301700	177.17 x 5.33
175.0	190.1	6.3	RW5301750	183.52 x 5.33
180.0	190.7	4.2	RW5201800	183.74 x 3.53
180.0	**195.1**	**6.3**	**RW5301800**	**183.52 x 5.33**
180.0	**200.5**	**8.1**	**RW5401800**	**189.87 x 7.00**
190.0	200.7	4.2	RW5201900	196.44 x 3.53
190.0	205.1	6.3	RW5301900	196.22 x 5.33
200.0	215.1	6.3	RW5302000	208.92 x 5.33
200.0	**220.5**	**8.1**	**RW5402000**	**208.92 x 7.00**
210.0	225.1	6.3	RW5302100	215.27 x 5.33
220.0	235.1	6.3	RW5302200	227.97 x 5.33
220.0	**240.5**	**8.1**	**RW5402200**	**227.97 x 7.00**
230.0	245.1	6.3	RW5302300	234.32 x 5.33
230.0	250.5	8.1	RW5402300	240.67 x 7.00
240.0	255.1	6.3	RW5302400	247.02 x 5.33
240.0	260.5	8.1	RW5402400	253.37 x 7.00

Rod	Groove Dia.	Groove Width	TSS Part No.	O-ring Sizes
d_N f8/h9	D_1 H9	L_1 +0.2		
250.0	**270.5**	**8.1**	**RW5402500**	**266.07 x 7.00**
260.0	284.0	8.1	RW5802600	266.07 x 7.00
270.0	290.5	8.1	RW5402700	278.77 x 7.00
270.0	294.0	8.1	RW5802700	278.77 x 7.00
280.0	300.5	8.1	RW5402800	291.47 x 7.00
280.0	**304.0**	**8.1**	**RW5802800**	**291.47 x 7.00**
300.0	324.0	8.1	RW5803000	316.87 x 7.00
320.0	**344.0**	**8.1**	**RW5803200**	**329.57 x 7.00**
350.0	370.5	8.1	RW5403500	354.97 x 7.00
350.0	374.0	8.1	RW5803500	367.67 x 7.00
360.0	**384.0**	**8.1**	**RW5803600**	**367.67 x 7.00**
400.0	420.5	8.1	RW5404000	417.96 x 7.00
400.0	424.0	8.1	RW5804000	417.96 x 7.00
450.0	474.0	8.1	RW5804500	468.76 x 7.00
500.0	524.0	8.1	RW5805000	506.86 x 7.00
550.0	574.0	8.1	RW5805500	557.66 x 7.00
600.0	624.0	8.1	RW5806000	608.08 x 7.00
650.0	677.3	9.5	RW5506500	663 x 8.40
700.0	724.0	8.1	RW5807000	712 x 7.00
800.0	827.3	9.5	RW5508000	813 x 8.40
900.0	927.3	9.5	RW5509000	913 x 8.40
1000.0	1027.3	9.5	RW55X1000	1013 x 8.40
1000.0	1038.0	13.8	RW56X1000	1016 x 12.00
1100.0	1138.0	13.8	RW56X1100	1116 x 12.00
1200.0	1227.3	9.5	RW55X1200	1213 x 8.40
1200.0	1238.0	13.8	RW56X1200	1216 x 12.00
1300.0	1338.0	13.8	RW56X1300	1316 x 12.00
1500.0	1538.0	13.8	RW56X1500	1516 x 12.00
2000.0	2038.0	13.8	RW56X2000	2016 x 12.00
2600.0	2638.0	13.8	RW56X2600	2616 x 12.00

The rod diameters in bold type are in accordance with the recommendations of ISO 3320.

Other dimensions and all intermediate sizes up to 2600 mm diameter including imperial (inch) sizes can be supplied.

All O-Rings with 12 mm cross section are delivered as special profilring.

Turcon® Double Delta®

Double Acting

Rubber Energized Plastic Faced Seal

For O-Ring Grooves

Material:
Turcon® and Elastomer

Turcon® Double Delta®

Description

Turcon® Double Delta® is an rubber energised plastic faced seal. The seal is designed to expand and improve the service parameters of O-Rings and is installed in existing O-Ring grooves.

Double Delta® combines the flexibility and response of O-Rings with the wear and friction characteristics of the Turcon® materials in dynamic applications.

The figures below shows the cross section of the Double Delta®.

The double acting performance of the seal follows from the symmetrical cross section which allow the seal to respond to pressure in both directions.

Initial contact pressure is provided by radial compression of the O-Ring. When the system pressure is increased the O-Ring transforms this into additional contact pressure, the contact pressure of the seal is thereby automatically adjusted so sealing is ensured under all service conditions.

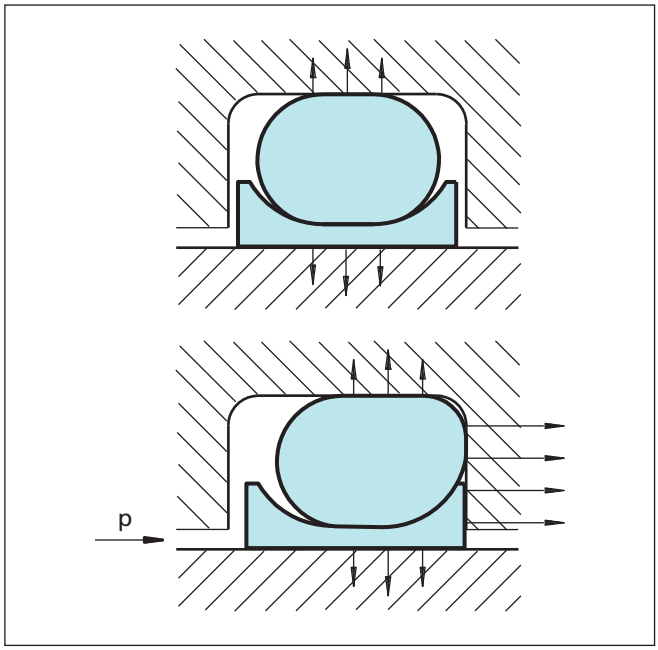

Figure 77 Turcon® Double Delta® without and with pressure

Notches

Turcon® Double Delta® is as standard supplied without radial notches, as the thin radial section of the seal gives good response to pressure variations.

For diameters from 2 mm notches on both sides are optional. These ensure direct pressurizing of the seal under all operating conditions.

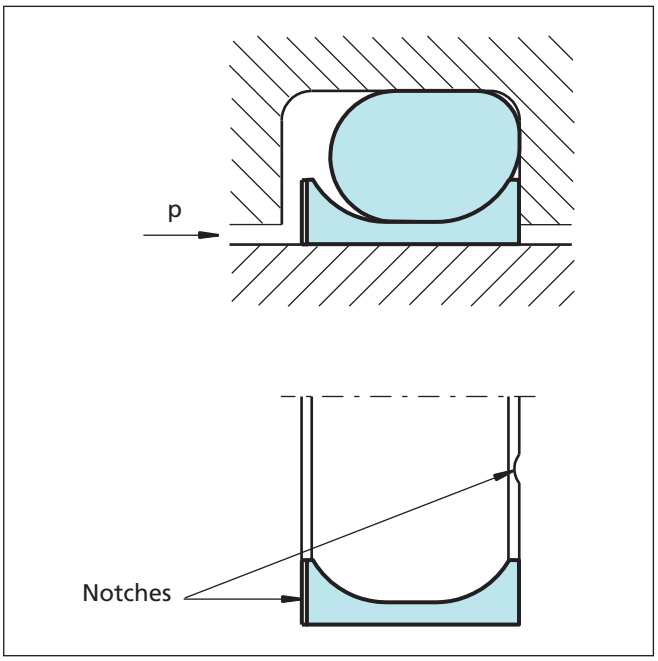

Figure 78 Turcon® Double Delta® with notches

Advantages

- Compact groove dimensions and simple installation
- Low friction without stick-slip
- Resistance against wear and extrusion
- Rod seals available for all diameters from 2 to 999.9 mm
- Standard cross sections cover AS 568A and important metric O-Rings, other cross sections available on request.
- Fits also groove dimensions per MIL-G-5514F

Application Examples

The Turcon® Double Delta® is preferably used as a double acting seal for hydraulic and pneumatic equipment in sectors such as:

- Machine tools
- Handling devices
- Manipulators
- Valves
- Chemical process equipments

It is particular recommended for light duty and small diameter applications.

Technical Data

Operating conditions

Pressure:	Up to 35 MPa
Velocity:	Up to 15 m/s
Temperature:	-45 °C to +200 °C (according to O-Ring material)
Media:	Mineral oil-based hydraulic fluids, flame retardant hydraulic fluids, environmentally safe hydraulic fluids (bio-oils), phosphate ester, water and others, depending on the O-Ring material compatibility (see Table LVIII)
Clearance:	The maximum permissible radial clearance Smax is shown in Table LIX, as a function of the operating pressure and functional diameter.

Important Note:
The above data are maximum values and cannot be used at the same time. e.g. the maximum operating speed depends on material type, pressure, temperature and gap value.
Temperature range also dependent on medium.

Materials

The following material combinations have proven effective for hydraulic applications:

All round material for hydraulic applications with reciprocating, short stroke or helical movements in mineral oils, flame retardant hydraulic fluids HFC, phosphate ester, bio-oils or fluids having less satisfactory lubricating properties:

Turcon® Double Delta ®:	Turcon® M12	
O-Ring:	NBR, 70 Shore A	N
	FKM, 70 Shore A	V
	EPDM, 70 Shore A	E
Set code:	M12N, M12V or M12E	

For medium to heavy applications with reciprocating movements in mineral oils and other media with good lubrication:

Turcon® Double Delta®:	Turcon® T46	
O-Ring:	NBR, 70 Shore A	N
	FKM, 70 Shore A	V
Set code:	T46N or T46V	

For specific applications, all Turcon® materials are available. Other viable material combinations are listed in Table LVIII.

Table LVIII Turcon® and Zurcon® Materials for Turcon® Double Delta®

Material, Applications, Properties	Code	O–Ring Material Shore A	Code	O-Ring Operating Temp.*°C	Mating Surface Material	MPa max. Dyna-mic
Turcon® M12 First material choice for seals in linear motion Overall improved properties For new constructions and updating For all commonly applpied hydraulic fluids including fluids with low lubrication performance Lowest friction and best sliding properties Lowest wear on seals Improved absorption of abrasive contaminants No wear or abrasion of counter surface Mineral fibre and Additives filled Colour: Dark grey	M12	NBR- 70	N	-30 to +100	Steel Steel hardened Steel chrome plated (rod Steel plated (rod) Cast iron Stainless Steel Titanium	35
		NBR- 70 Low temp.	T	-45 to +80		
		FKM- 70	V	-10 to +200		
Turcon® T05 For lubricating fluids Also for gas service Very low friction Very good sliding and sealing properties Colour: Turquoise	T05	NBR- 70	N	-30 to +100	Steel Steel hardened Steel chrome plated (rod)	20
		NBR- 70 Low temp.	T	-45 to +80		
		FKM- 70	V	-10 to +200		
Turcon® T24 For lubricating and non-lubricating hydraulic fluids Good sealing function Moderate extrusion resistance Carbon filled Colour: Black	T24	NBR- 70	N	-30 to +100	Steel Steel hardened Steel chrome plated (rod) Cast iron Stainless steel Aluminium	25
		NBR- 70 Low temp.	T	-45 to +80		
		FKM- 70	V	-10 to +200		
		EPDM- 70	E**	-45 to+145		
Turcon® T46 For lubricated hydraulics in linear motion High compressive strength High extrusion resistance Very good sliding and wear properties BAM tested Bronze filled Colour: Light to dark brown, which may have variations in shading	T46	NBR- 70	N	-30 to +100	Steel hardened Steel chrome plated (rod) Cast iron	35
		NBR-70 Low temp.	T	-45 to +80		
		FKM- 70	V	-10 to +200		
Zurcon® Z80 For lubricating and non-lubricating fluids Water based fluids, air and gases Dry air pneumatics High abrasion and extrusion resistance For service in abrasive conditions and media with particles Good chemical resistance Limited temperature capability (-60 to +80 °C) UHMWPE (Ultra High Molecular Weight PE) Colour: White to off-white	Z80	NBR- 70	N	-30 to (+100)	Steel Steel hardened Steel chrome plated (rod) Stainless steel Aluminium Ceramic coating	30
		NBR- 70 Low temp.	T	-45 to +80		
		EPDM- 70	E**	-45 to(+145)		

* The O-Ring Operation Temperature is only valid in mineral hydraulic oil (except EPDM). ** Material not suitable for mineral oils.
BAM: Tested by "Bundesanstalt Materialprüfung, Germany". Highlighted materials are standard.

■ Installation Recommendation

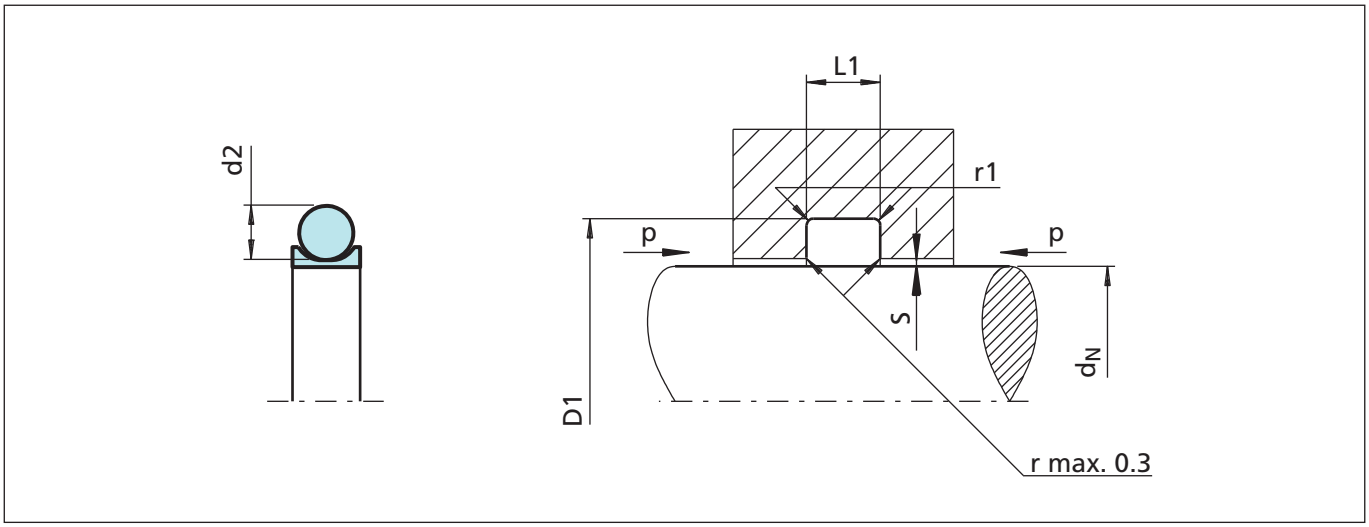

Figure 79 Installation drawing

Table LIX Installation dimensions

Series No.	Rod Diameter d_N f8/h9		Groove Diameter	Groove Width	Radius	Radial Clearance S max.				O-Ring Cross-Section
	Standard Range	Extended Range	D_1 H9	L_1 +0.2	r_1	2 MPa	10 MPa	20 MPa	35 MPa	d_2
RDD0	4 - 9.9	2 - 129.9	d_N+2.9	2.4	0.4	0.10	0.10	0.08	0.05	1.78
RDD1	10 - 19.9	5 - 249.9	d_N+4.5	3.6	0.4	0.15	0.15	0.10	0.07	2.62
RDD2	20 - 39.9	5 - 449.9	d_N+6.2	4.8	0.6	0.25	0.20	0.15	0.08	3.53
RDD3	40 - 119.9	12 - 649.9	d_N+9.4	7.1	0.8	0.35	0.25	0.20	0.10	5.33
RDD4	120 - 649.9	60 - 999.9	d_N+12.2	9.5	0.8	0.50	0.30	0.25	0.15	7.00
RDD5	650 - 999.9	110 - 999.9	d_N+15.0	10.0	1.0	0.60	0.40	0.30	0.20	8.40

TSS Slydring®/Wear Rings are not applicable at very small radial clearance; consult the Slydring® catalog.

Ordering example

Turcon® Double Delta®, complete with O-Ring, standard range, series RDD3 (from Table LIX),
Rod diameter: d_N = 80.0 mm
TSS Part No.: RDD300800 (from Table LX)

Select the material from Table LVIII. The corresponding code numbers are appended to the TSS Part No. (from Table LX). Together they form the TSS Article No. For all intermediate sizes not shown in Table LX, the TSS Article No. can be determined from the example opposite.

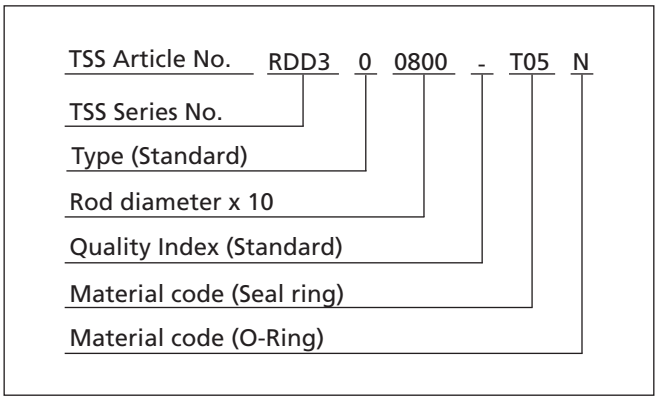

* Ordering Double Delta® with radial notches, replace "0" in the fifth character with "N".

Table LX Installation dimensions/TSS Part No.

Rod Diameter d_N h9	Groove Diameter D_1 H9	Groove Width L_1 +0.2	TSS Part No.	O-Ring Size
3.0	5.9	2.4	RDD000030	2.90 x 1.78
4.0	**6.9**	**2.4**	**RDD000040**	**3.68 x 1.78**
5.0	**7.9**	**2.4**	**RDD000050**	**4.87 x 1.80**
6.0	**8.9**	**2.4**	**RDD000060**	**6.07 x 1.78**
8.0	**10.9**	**2.4**	**RDD000080**	**7.65 x 1.78**
10.0	**14.5**	**3.6**	**RDD100100**	**10.77 x 2.62**
12.0	**16.5**	**3.6**	**RDD100120**	**12.37 x 2.62**
14.0	**18.5**	**3.6**	**RDD100140**	**13.94 x 2.62**
15.0	19.5	3.6	RDD100150	15.0 x 2.65
16.0	**20.5**	**3.6**	**RDD100160**	**17.12 x 2.62**
18.0	**22.5**	**3.6**	**RDD100180**	**18.72 x 2.62**
20.0	**26.2**	**4.8**	**RDD200200**	**20.22 x 3.53**
22.0	**28.2**	**4.8**	**RDD200220**	**21.82 x 3.53**
25.0	**31.2**	**4.8**	**RDD200250**	**25.00 x 3.53**
28.0	**34.2**	**4.8**	**RDD200280**	**28.17 x 3.53**
30.0	36.2	4.8	RDD200300	31.35 x 3.53
32.0	**38.2**	**4.8**	**RDD200320**	**32.92 x 3.53**
35.0	41.2	4.8	RDD200350	36.09 x 3.53
36.0	**42.2**	**4.8**	**RDD200360**	**36.09 x 3.53**
40.0	**49.4**	**7.1**	**RDD300400**	**40.64 x 5.33**
42.0	51.4	7.1	RDD300420	43.82 x 5.33
45.0	**54.4**	**7.1**	**RDD300450**	**46.99 x 5.33**
48.0	57.4	7.1	RDD300480	46.99 x 5.33
50.0	**59.4**	**7.1**	**RDD300500**	**50.17 x 5.33**
52.0	61.4	7.1	RDD300520	53.34 x 5.33
55.0	64.4	7.1	RDD300550	56.52 x 5.33
56.0	**65.4**	**7.1**	**RDD300560**	**56.52 x 5.33**
60.0	69.4	7.1	RDD300600	59.69 x 5.33
63.0	**72.4**	**7.1**	**RDD300630**	**62.87 x 5.33**
65.0	74.4	7.1	RDD300650	66.04 x 5.33
70.0	**79.4**	**7.1**	**RDD300700**	**72.39 x 5.33**
80.0	**89.4**	**7.1**	**RDD300800**	**81.92 x 5.33**
85.0	94.4	7.1	RDD300850	85.09 x 5.33
90.0	**99.4**	**7.1**	**RDD300900**	**91.44 x 5.33**
95.0	104.4	7.1	RDD300950	97.79 x 5.33
100.0	**109.4**	**7.1**	**RDD301000**	**100.97 x 5.33**

Rod Diameter d_N h9	Groove Diameter D_1 H9	Groove Width L_1 +0.2	TSS Part No.	O-Ring Size
105.0	114.4	7.1	RDD301050	107.32 x 5.33
110.0	**119.4**	**7.1**	**RDD301100**	**110.49 x 5.33**
115.0	124.4	7.1	RDD301150	116.84 x 5.33
120.0	132.2	9.5	RDD401200	120.02 x 7.0
125.0	**137.2**	**9.5**	**RDD401250**	**126.37 x 7.0**
130.0	142.2	9.5	RDD401300	132.72 x 7.0
135.0	147.2	9.5	RDD401350	135.89 x 7.0
140.0	**152.2**	**9.5**	**RDD401400**	**142.24 x 7.0**
150.0	162.2	9.5	RDD401500	151.77 x 7.0
160.0	**172.2**	**9.5**	**RDD401600**	**164.47 x 7.0**
170.0	182.2	9.5	RDD401700	170.82 x 7.0
180.0	**192.2**	9.5	**RDD401800**	**183.52 x 7.0**
190.0	202.2	9.5	RDD401900	189.87 x 7.0
200.0	**212.2**	**9.5**	**RDD402000**	**202.57 x 7.0**
210.0	222.2	9.5	RDD402100	215.27 x 7.0
220.0	**232.2**	**9.5**	**RDD402200**	**227.97 x 7.0**
230.0	242.2	9.5	RDD402300	227.97 x 7.0
240.0	252.2	9.5	RDD402400	240.67 x 7.0
250.0	**262.2**	**9.5**	**RDD402500**	**253.37 x 7.0**
280.0	**292.2**	**9.5**	**RDD402800**	**291.47 x 7.0**
300.0	312.2	9.5	**RDD403000**	304.17 x 7.0
320.0	**332.2**	**9.5**	**RDD403200**	**329.57 x 7.0**
350.0	362.2	9.5	RDD403500	354.97 x 7.0
360.0	**372.2**	**9.5**	**RDD403600**	**367.67 x 7.0**
400.0	412.2	9.5	RDD404000	405.26 x 7.0
500.0	521.2	9.5	RDD405000	506.86 x 7.0
600.0	621.2	9.5	RDD406000	608.08 x 7.0
650.0	665.0	10.0	RDD506500	650.0 x 8.4
700.0	815.0	10.0	RDD507000	700.0 x 8.4
800.0	815.0	10.0	RDD508000	800.0 x 8.4
900.0	915.0	10.0	RDD509000	900.0 x 8.4
950.0	965.0	10.0	RDD509500	950.0 x 9.4

The rod diameters in **bold** type correspond to the recommendations of ISO 3320.
TSS Part No. for other dimensions and **all** intermediate sizes up to 999.9 mm diameter including imperial (inch) sizes can be supplied. Larger sizes up to 2600 mm available upon request.

■ Special Turcon® Double Delta®

Turcon® Double Delta® for one Back-up Ring grooves

Double Delta® is available for designs where grooves for O-Ring with one Back-up Ring are used according to Table LXI.

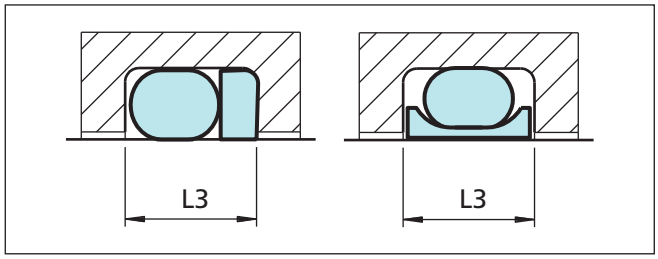

Figure 80 Groove width

Table LXI Seals for one Back-up Ring groove

Series No.	Groove Width	Execution Mark 5th digit		O-Ring Cross Section
	L_3	Without Notch	With Notch*	d_2
RDA0	3.80	0	N	1.78
RDA1	4.65	0	N	2.62
RDA2	5.70	0	N	3.53
RDA3	8.50	0	N	5.33
RDA4	11.20	0	N	7.00
RDA5	12.50	0	N	8.40

* Available for diameters from 8 mm

Ordering Example

Double Delta® complete with NBR O-Ring
Rod diameter: d_N = 80.0 mm
Groove diameter: 89.4 mm
Groove width: 8.5 mm.
TSS Article No.:. RDA300800-M12N

* From Table LXI or Table LXII
** FromTable LVIII
*** From Table LVIII
[1] N for seals with notches, available from dia. 8 mm

TSS Article No. RDA3 0 0800 - M12 N

- TSS Series No.*
- Type (Standard)[1]
- Rod diameter x 10
- Quality Index (Standard)
- Material code (Seal ring)**
- Material code (O-Ring)***

Turcon® Double Delta® for Metric O-Rings

Double Delta® is available for installation in grooves for metric O-Rings as listed in Table LXII.

Table LXII Rod Seals for Metric O-Ring Grooves

O-Ring Cross-Section	Groove Diameter	Groove Width	Series No.	Execution Mark 5th digit		Available Range
d_2	D_1 H9	L_1 +0.2		Standard	Notch*	
2.0	d_N + 3.3	2.7	RD2A	0	N	3 -100.0
2.4	d_N + 4.1	3.2	RD2E	0	N	5 -160.0
2.5	d_N + 4.3	3.3	RD2F	0	N	5 -160.0
3.0	d_N + 5.2	4.0	RD3A	0	N	6 -200.0
4.0	d_N + 7.0	5.2	RD4A	0	N	8 -300.0
5.0	d_N + 8.8	6.6	RD5A	0	N	12 -400.0
5.7	d_N + 10.0	7.2	RD5H	0	N	12 -649.9

* Available for diameters from 8 mm

Non Standard Seals

Available upon Request

Old Series

Special Series

Polypac® VA

Seal for high pressure volumetric water pump. It's made with a special grade NBR+FABRIC. High sealing efficiency and wear resistance.

Diameter Range mm	Pressure Range MPa	Temperature Range °C	Velocity m/s
15 - 70	Up to 40	Up to +80	Up to 2

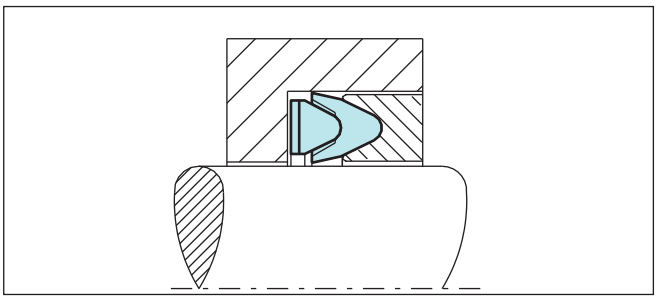

Polypac® VB

Seal for low pressure volumetric water pump. It's made with a NBR rubber gasket clamped on a softer NBR+FABRIC V-ring shape. These seals in combination with VA seals for high pressure improve the performance of the sealing system in high pressure water pump.

Diameter Range mm	Pressure Range MPa	Temperature Range °C	Velocity m/s
13 - 60	-	Up to +80	Up to 2

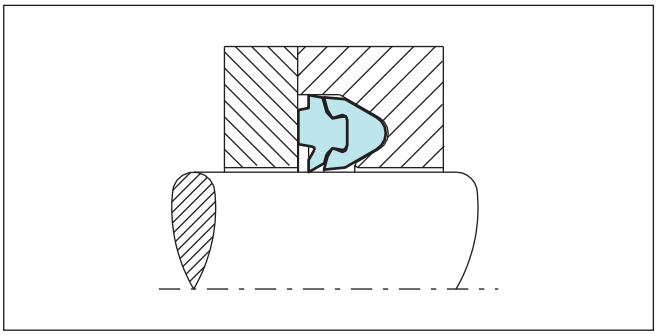

Polypac® DS - CX95 and DS/TE - CX95

The seals DS and DS/TE are designed to improve the water cleaning equipment's performance.

The special profile can withstand the frequent pressure variations, high temperatures and critical lubrication. The U shaped sealing element is made out of cotton fabric reinforced NBR and provide with a NBR energiser ring a good sealing performance at high as low pressure working condition. The version DS/TE with bronze filled PTFE back up ring permit to work at high pressure.

Diameter Range mm	Pressure Range MPa	Temperature Range °C	Velocity m/s
15 - 40	Up to 40 for DS/TE Up to 10 for DS	Up to +80	Up to 2

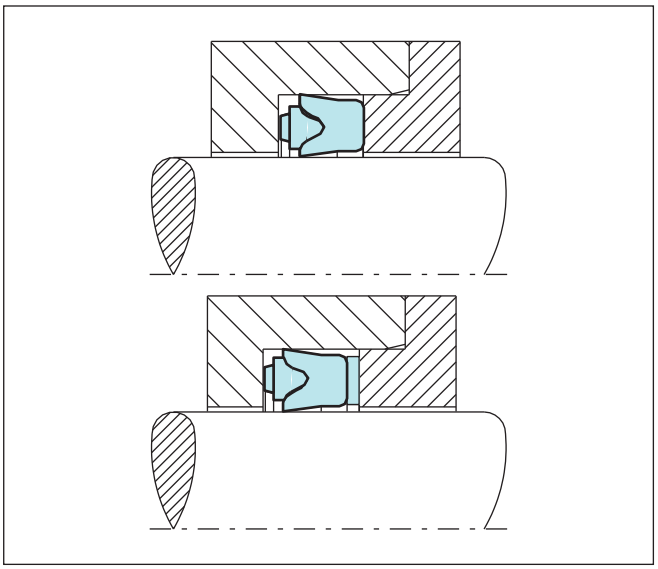

U-Cup RU0

Single lip U-Cup used as primarily seals for piston rods in hydraulic cylinders. U-Cups in polyurethane are proven elements, due to their good mechanical properties, for standard cylinder construction, particularly for mobile hydraulics under rough operating conditions.

Diameter Range mm	Pressure Range MPa	Temperature Range (Z20) °C	Velocity m/s
6 -280	Up to 40	-35 to +110	Up to 0.5

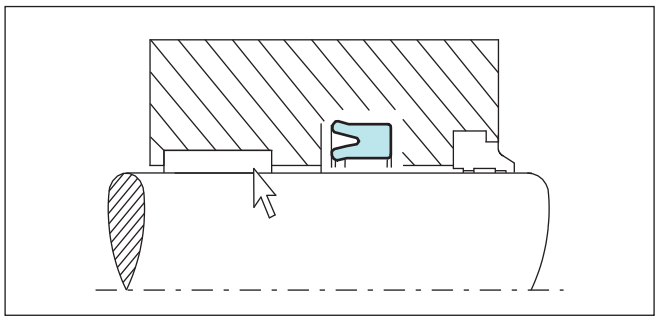

U-Cup RU3

Double lip U-Cup used as primarily seals for piston rods in hydraulic cylinders. U-Cups in polyurethane are proven elements, due to their good mechnical properties, for standard cylinder construction, particularily for mobile hydraulics under rough operating conditions.

Diameter Range mm	Pressure Range MPa	Temperature Range (Z20) °C	Velocity m/s
12 - 200	Up to 40	-35 to +110	Up to 0.5

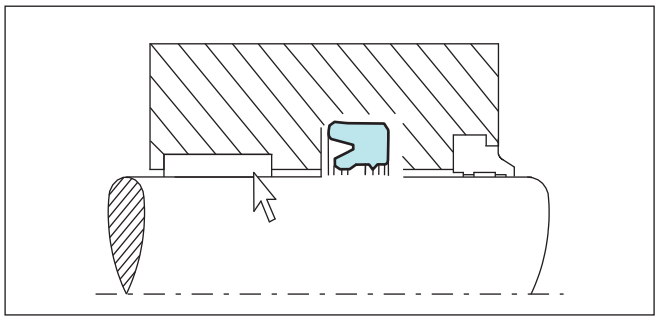

U-Cup RUB

These seals have a symmetrical configuration of the sealing lips and are mainly used in single acting or double acting standard hydraulic cylinders, particularily for mobile hydraulics under rough operating conditions.

Diameter Range mm	Pressure Range MPa	Temperature Range (Z20) °C	Velocity m/s
5 - 290	Up to 40	-35 to +110	Up to 0.5

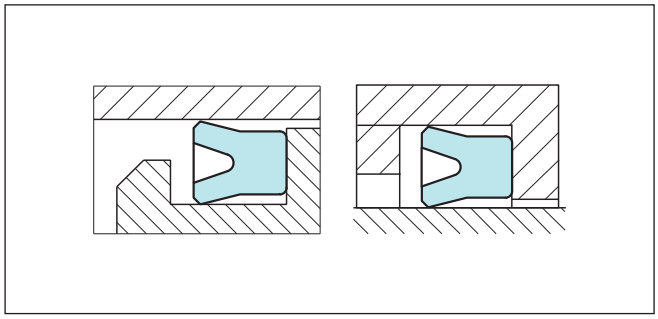

U-Cup RU1

Compact U-Cup of Zurcon® Polyurethane with only a dynamic sealing lip for small installation dimensions.

Diameter Range mm	Pressure Range MPa	Temperature Range (Z20) °C	Velocity m/s
10 - 170	Up to 40	-35 to +110	Up to 0.5

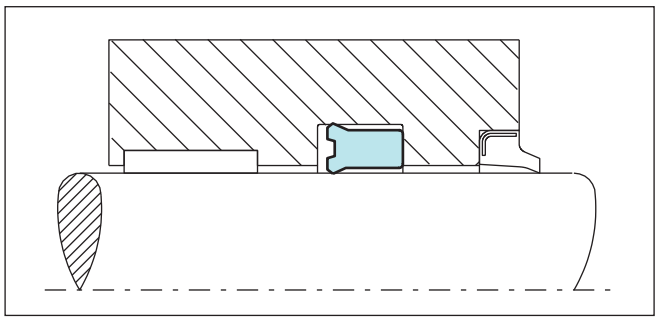

U-Cup RU2B

The compact U-Cup type RU2B is designed for small grooves. It is thus particularly suitable for use in space-saving designs. The compact form provides a high sealing effect even with low system pressures.

For larger gaps and high pressure peaks, the U-Cup RU2B has an integrated Back-up Ring.

Diameter Range mm	Pressure Range MPa	Temperature Range (Z20) °C	Velocity m/s
32 - 160	Up to 50	-35 to +110	Up to 0.5

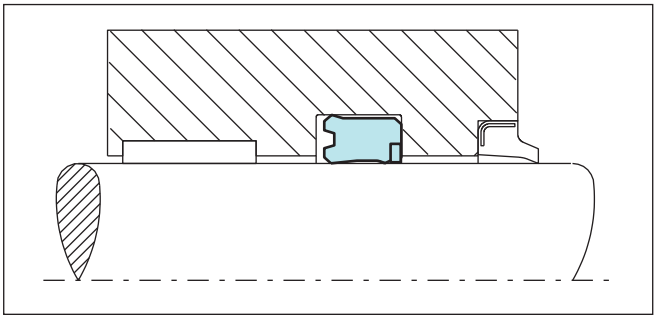

U-Cup RU3B

The U-Cup type RU3B is used as a rod seal for heavy-duty conditions in mobile and industrial hydraulics.

U-Cup RU3B has integrated Back-up Ring to prevent the seal material from extrusion at high temperatures and high peak pressures.

Diameter Range mm	Pressure Range MPa	Temperature Range (Z20) °C	Velocity m/s
40 - 171	Up to 50	-35 to +110	Up to 0.5

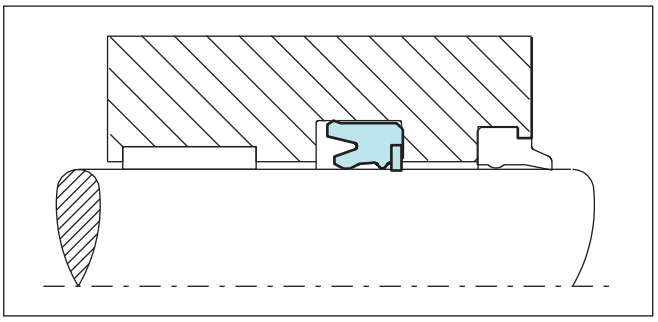

Turcon® Stepseal® 2A

Single acting primary seal for applications requiring stabilized seal position in the groove. A further development of Turcon® Stepseal® 2K by adding a stabilising edge, which prevents the seal from "tilting", cursed by seal-system pressure build-up between seals, in tandem configuration. It also increases assembly robustness through protection of the seal face during insertion of the rod.

Same high sealing properties as Stepseal® 2K.

Stepseal® 2A is used as primary seal in rod sealing systems preferably together with a secondary seal from the range of Turcon® and Zurcon® seals, a double acting Excluder® or Scraper.

Installation in the same grooves as Turcon® Stepseal® 2K and grooves according to ISO 7425/2.

Standard TSS Part Number is available

Diameter Range mm	Pressure Range MPa	Temperature Range °C	Velocity m/s
20 - 2600	60	-45 to +200	Up to15

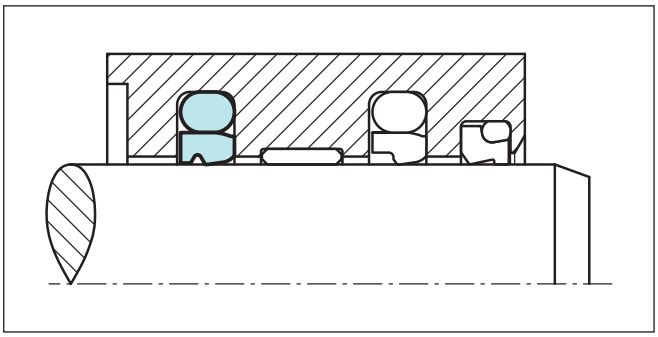

Turcon® Stepseal® 2A CR

Single acting rubber energized rod seal for dynamic applications. High sealing efficiency, low friction with no Stick-slip, minimal break out force and high wear resistance with integrated back up ring for higher pressures or bigger gaps.

Installation in the same grooves as Turcon® Stepseal® 2K and grooves according to ISO 7425/2.

Standard TSS Part Number is available

Diameter Range mm	Pressure Range MPa	Temperature Range °C	Velocity m/s
30 - 2600	100	-45 to +200	Up to 5

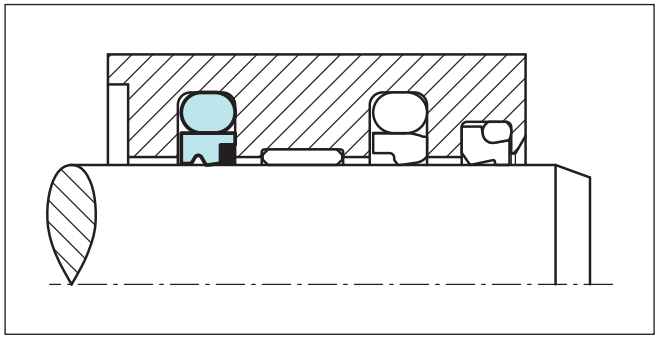

Turcon® Glyd Ring® CR

Double acting rubber energised rod seal for dynamic applications. Low friction with no Stick-slip, minimal break out force and high wear resistance with integrated Back-up Rings for higher pressures or larger gaps. Installation in grooves with dimensions according to ISO 7425 (the same as for Turcon® Glyd Ring® for piston).

Diameter Range mm	Pressure Range MPa	Temperature Range °C	Velocity m/s
30 - 2600	100	-45 to +200	5

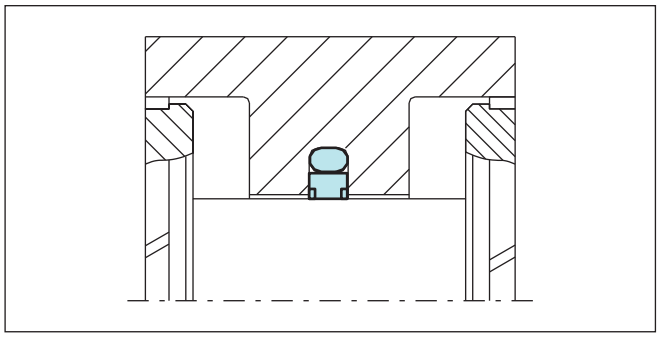

Turcon® AQ-Seal® 5

A further development of the standard Turcon® AQ-Seal® double acting seal for sealing between two media, e.g. fluid/gas separation by incorporating a limited footprint X-Ring® Seal elastomer in the dynamic sealing face. Energised by two O-rings to improve sealing behaviour. Same groove dimensions as Turcon® AQ-Seal® 5 for piston.

Diameter Range mm	Pressure Range MPa	Temperature Range °C	Velocity m/s
40 - 700	60	-45 to +200	3

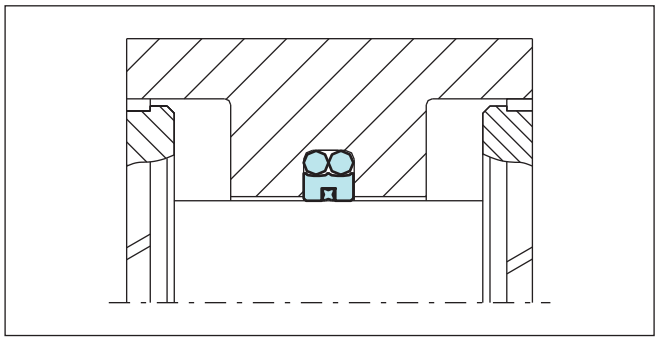

Turcon® AQ-Seal®

A double acting rubber energised seal development for sealing between two media, e.g. fluid/gas seperation by incorporating a limited footprint X-Ring® Seal inset into the dynamic sealing face. Installation in grooves according to ISO 7425 (the same as for Turcon® AQ-Seal® for piston).

Diameter Range mm	Pressure Range MPa	Temperature Range °C	Velocity m/s
16 - 2600	50	-45 to +200	2

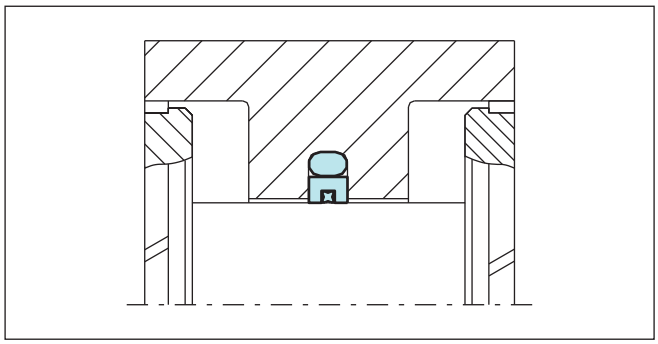

Turcon® Variseal® W

The Turcon® Variseal® W is a single acting rod seal energized by a special helical spring. The advantage of the Turcon®Variseal® W lies in its low friction and constant preloading force over a relatively large deformation range. The Turcon® Variseal® W is used wherever friction has to be kept within a narrow tolerance zone.

Diameter Range mm	Pressure Range MPa	Temperature Range °C	Velocity m/s
6 - 2600	45	-70 to +200	15

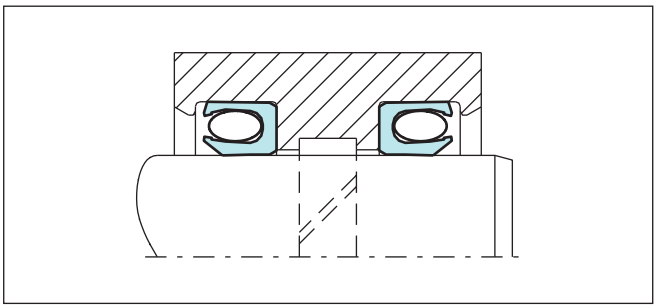

Turcon® Glyd Ring® Hz

Glyd Ring® Hz is a symmetric double-acting seal with a special design on the sealing area. In principle there are two Stepseals® face to face. The seal width is close to the groove to reduce axial movements. The Glyd Ring® Hz is for applications with short and high frequencies. Installation in grooves with dimensions according to ISO 7425 (the same as for Turcon® Glyd Ring® for piston).

Diameter Range mm	Pressure Range MPa	Temperature Range °C	Velocity m/s
8 - 2600	40	-45 to +200	15

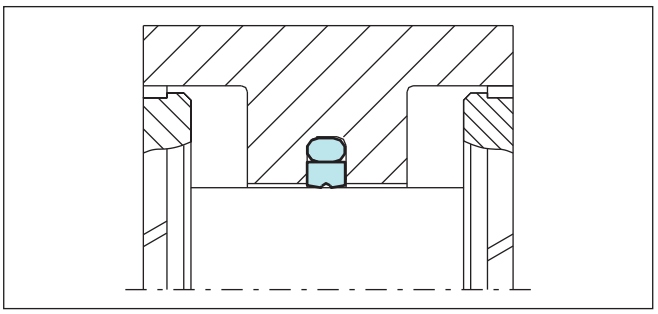

Turcon® Variseal® M2 CR

Single acting sealing element comprising a U-shaped Turcon® ring and stainless energising finger spring. Low friction with no Stick-slip, minimal break out force and high wear resistance. Resistant to most liquids and chemical. Unlimited shelf life. For higher pressure applications or Larger extrusion gaps the Variseal® M2 CR has an integrated Back-up Ring in material Zurcon® Z43.

Diameter Range mm	Pressure Range MPa	Temperature Range °C	Velocity m/s
8 - 300	100	-30 to +260	15

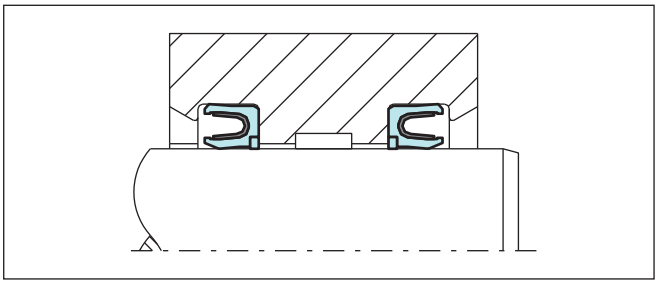

Captive Turcon® Glyd Ring®

A seal for special applications where the Glyd Ring® has to slide across dimensional changes (e.g. from a small diameter with sealing efficiency over the seal to a large diameter with no sealing efficiency or vice virsa).

Standard TSS Part Number is available

Diameter Range mm	Pressure Range MPa	Temperature Range °C	Velocity m/s
6 - 2600	60	-45 to +200	Up to 15

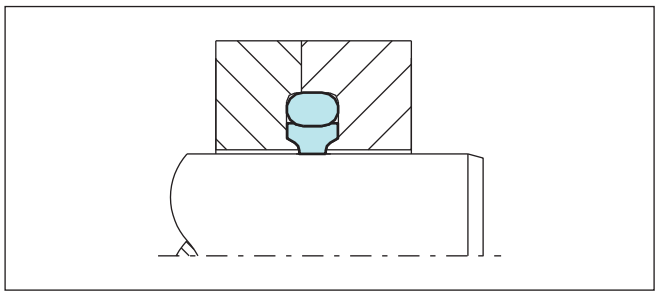

Turcon® Buffer Ring

Turcon® Buffer Ring is an uncut "Piston Ring". With notches on one side the Ring is a single acting seal often used as protector of a common rod sealing system against peak pressures where the notch prevents risk of pressure trap.

If a double acting sealing effect is required it is necessary to install two Buffer Rings, back to back, to take the pressure from both sides.

For linear, helical and rotary movements.

Standard TSS Part Number is available

Diameter Range mm	Pressure Range MPa	Temperature Range °C	Velocity m/s
4 - 2500	60	+30 to +160	Up to 15 (10 rotary)

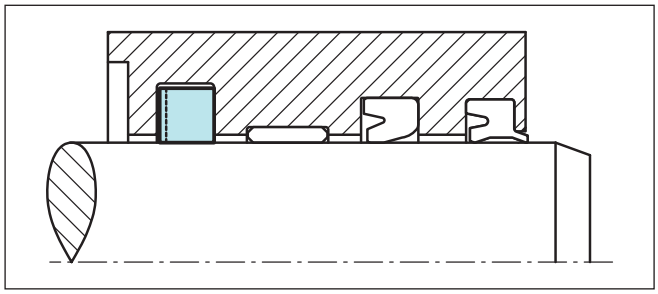

Part II
Piston Seals

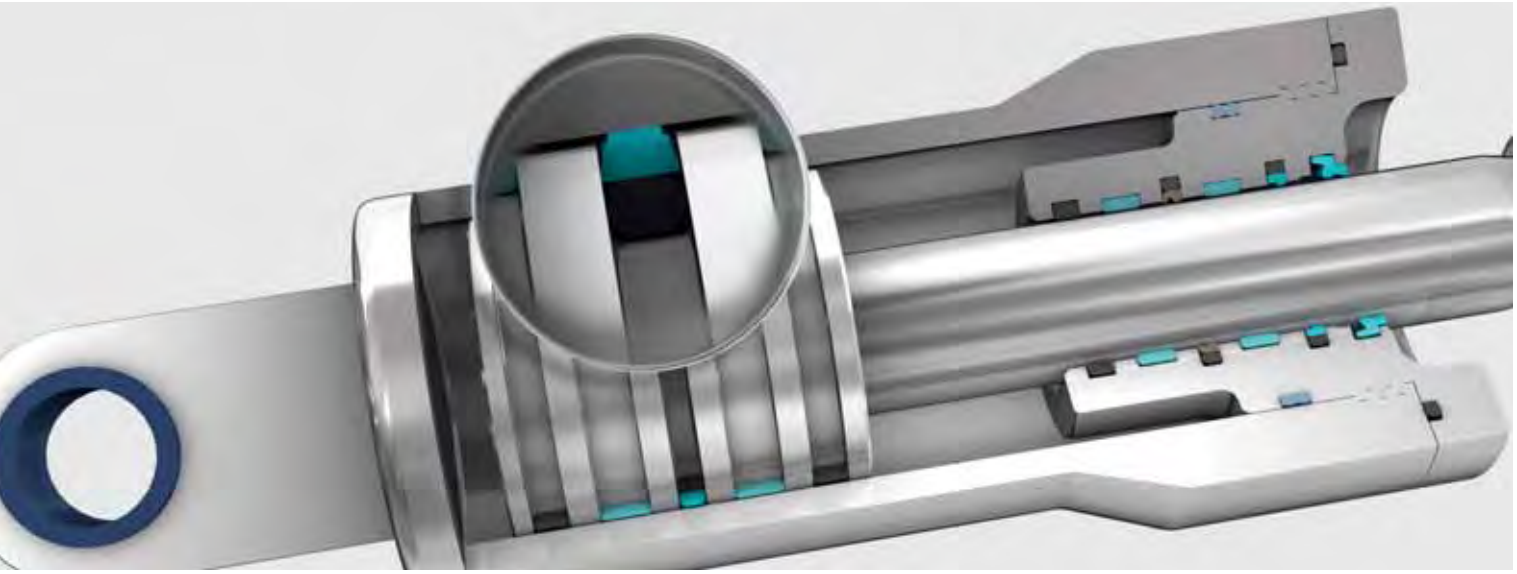

Contents

Choice of the Sealing Element 4
Design Instructions 8
Installation of Piston Seals 10
Turcon® Glyd Ring® 15
Turcon® Glyd Ring® T 25
Zurcon® Glyd Ring® P 35
Turcon® AQ-Seal® 5 41
Turcon® AQ-Seal® 51
POLYPAC® - PHD Seal 61
Turcon® Stepseal® 2K 67
Turcon® Stepseal® V 77
Turcon® Double Delta® 87
Turcon® Variseal® M2 95
Turcon® VL Seal® 103
Zurcon® U-Cup PUA 113
Zurcon® Wynseal 119
Zurcon® Wynseal M 125
POLYPAC® - PHD/P 135
Compact Seal DAS Type A/B - POLYPAC® - DBM 141
Zurcon® Compact Seals PU DAS - POLYPAC® - EUD 151
Compact Seal POLYPAC® - Duopac DPS/DPC 157
POLYPAC® - Veepac CH 165
POLYPAC® - Veepac CH/G1 171
POLYPAC® - Selemaster DSM 177
Non Standard Seals 183

■ Choice of the Sealing Element

Sealing elements have a decisive influence on the design, function and service life of hydraulic and pneumatic cylinders and systems.

This applies equally to the piston seals where leak tightness, resistance to wear and gap extrusion, resistance to process media, resistance to high and low temperatures, low friction, compact form and simple installation are demanded in order to meet the requirements of industry for a functional sealing solution.

The significance of these parameters and their limits is generally dependent on the requirements of the specific application. Trelleborg Sealing Solutions has therefore developed a complete range of seals which, due to their optimized geometries and designs and the use of high-quality materials such as Turcon® and Zurcon®, satisfy the technical and economic demands of the industry in full.

In order to be in a position to select the most appropriate seal type and material, it is necessary to first define all the desired functional parameters. Table I can then be used to make an initial selection of seals according to the specific requirements of the application.

The second column of the table contains the number of the page on which further general information together with specific design and installation instructions on the particular seal type and materials (or material combinations with multi-element seals, e.g. Turcon® Glyd Ring® T) can be found.

Furthermore, attention is drawn to the quality of the mating surface. We recommend that the limits specified there be observed, as they have a decisive influence on the functionality and service life of the system.

The final choice of seal type and material must also take account of the detailed information on the seal elements.

Please do not hesitate to contact our Technical Department for further information on specific applications and special technical questions.

Note on Ordering

All multi-element standard piston seals, e.g. Glyd Ring® T, are generally supplied as complete seal sets. The supply includes the seal and matching elastomer energizing elements. The O-Ring does not have to be ordered separately. It is also possible to use other O-Ring materials from our O-Ring catalogue. In this case, please order the seal ring and O-Ring separately. We will inform you the sizes of the O-Ring on request.

When ordering the seal ring separately, it is then not necessary to mention the "O-Ring material code" in the TSS Article No. shown in the ordering examples.

Older designs of seals no longer contained in this catalogue naturally continue to be available (see chapter Non Standard Seals). For all new applications, however, we recommend the use of the seal types and preferred sizes (ISO series, wherever possible) listed in this catalogue.

Other combinations of Turcon® materials and special designs can be developed and supplied for special applications in all intermediate sizes up to 2.700 mm diameter, provided there is sufficient demand.

The sizes contained in this catalogue are generally available from stock or can be supplied at short notice. We reserve the right to modify our supply programme.

Table I Selection Criteria for Piston Seals

Seal		Application				Standard	Size Range	Ac-tion		Technical Data*			Recom-mended Seal Material
										Temp. Range **	Speed	Pressure	
Type	Page	Field of Application	Light	Medium	Heavy	ISO/DIN	mm	Single	Double	°C	m/s	MPa max.	
Turcon® Glyd Ring®	15	Mobil hydraulic	●	●	●	7425/1	8-2700		X	-45/ +200	15	50	Turcon® M12
		Machine tools	●	●	●							50	Turcon® T46
		Injection molding machines	●	●	●							20	Turcon® T05
		Presses	●	●	●		8-2300			-45/ +110	2	60	Zurcon® Z51
Turcon® Glyd Ring® T	25	Mobile hydraulics	●	●	●	7425/1	8-2700		X	-45/ +200	15	50	Turcon® M12
		Standard cylinders	●	●	●								
		Machine tools	●	●	●							50	Turcon® T46
		Injection moulding machines	●	●	●								
		Presses	●	●	●		8-2300			-45/ +110	2	60	Zurcon® Z51
		Automotive industry	●	●	●								
Zurcon® Glyd Ring® P	35	Earthmoving Equipment		●	●	7425/1 3320	45-200		X	-30/ +110	1	50	Zurcon® Z66 + NBR
		Mobile hydraulic		●	●								
		Construction Machinery		●	●								
Turcon® AQ-Seal® 5	41	Mobile hydraulic		●	●	-	40-700		X	-45/ +200	3	50	Turcon® M12
		Holding cylinders		●	●								
		Piston accumulators		●	●							50	Turcon® T46
Turcon® AQ-Seal®	51	Standard cylinders	●	●		7425/1	15-700		X	-45/ +200	2	40	Turcon® M12
		Piston accumulators	●	●								40	Turcon® T46
		Fluid/gas separation	●	●									
		Holding cylinders	●	●									
Compact Seal PHD	61	Mobile hydraulic	●	●	●	-	50-180		X	-45/ +135	1.5	40	PTFE Bronze + NBR + POM
		Excavators	●	●	●								
		Heavy duty hydraulic cylinders	●	●	●								
Turcon® Stepseal® 2K	67	Mobile hydraulics	●	●	●	7425/1	8-2700	X		-45/ +200	15	50	Turcon® M12
		Standard cylinders	●	●	●								
		Machine tools	●	●	●							50	Turcon® T46
		Injection moulding machines	●	●	●								
		Presses	●	●	●		8-2300			-45/ +110	2	60	Zurcon® Z51

Piston Seals

Seal		Application				Standard	Size Range	Ac-tion		Technical Data*			Recom-mended Seal Material
										Temp. Range **	Speed	Pressure	
Type	Page	Field of Application	Light	Medium	Heavy	ISO/DIN	mm	Single	Double	°C	m/s	MPa max.	
Turcon® Stepseal® V	77	Mobile hydraulics	●	●	●	7425/1	15-2700	X		-45/ +200	15	50	Turcon® M12
		Machine tools	●	●	●							50	Turcon® T46
		Injection moulding machines	●	●	●								
		Presses											
Turcon® Double Delta®	87	Machine tools	●	●		3601/3771 AS4716	5-2700		X	-45/ +200	15	20	Turcon® T05
		Handling devices/ manipulators	●	●								35	Turcon® M12
		Valves	●	●								35	Turcon® T46
		Chemical industry	●	●									
Turcon® Variseal®M2	95	High and low temperatures	●	●		3771 AS4716	6-2500	X		-70/ +260	15	40	Turcon® T40
		Aggresive media	●	●			6-2700					20	Turcon® T05
		Foodstuffs	●	●									
Turcon® VL Seal®	103	Machine tools	●	●	●	3601/3771 AS4716	10-2700	X		-45/ +200	15	50	Turcon® M12
		Automotive industry	●	●	●							50	Turcon® T46
		Handling devices / manipulators	●	●	●		10-2300			-45/ +110	2	25	Zurcon® Z52
Zurcon® U-Cup PUA	113	Presses	●	●	●	-	16-250	X		-35/ +110	0.5	40	Zurcon® Z20
		Lift platforms	●	●	●								
		Aftermarket	●	●	●								
Zurcon® Wynseal	119	Standard cylinders	●	●		7425/1	12-300		X	-35/ +110	0.5	25	Zurcon® Z20 + NBR
		Mobile hydraulics	●	●								40	Zurcon® Z23 + NBR
Zurcon® Wynseal M	125	Standard cylinders	●	●		7425/1	8-2300		X	-45/ +110	0.5	25	Zurcon® Z52
		Mobile hydraulic	●	●								45	Zurcon® Z51
		Handling machinery	●	●									
		Agriculture	●	●			8-2700			-45/ +200	10	35	Turcon® M12

TRELLEBORG SEALING SOLUTIONS

Piston Seals

Seal		Application				Standard	Size Range	Ac-tion		Technical Data*			Recom-mended Seal Material
										Temp. Range **	Speed	Pressure	
Type	Page	Field of Application	Light	Medium	Heavy	ISO/DIN	mm	Single	Double	°C	m/s	MPa max.	
Compact Seal PHD/P	135	Mobile hydraulic	●	●	●	-	50-180		X	-35/ +110	0.5	40	Zurcon® Z20 + NBR + POM
		Excavators	●	●	●								
		Heavy duty hydraulic cylinders	●	●	●								
Compact Seal DAS/DBM	141	Standard cylinders	●	●		6547	20-250		X	-30/ +100	0.5	35	NBR + TPE + POM
		Holding cylinders	●	●									
		Agricultural machinery	●	●									
Compact Seal PCC/PCG	151	Truck cranes	●	●	●	6547	40-270		X	-35/ +110	0.5	40	Zurcon® Z20 + NBR + POM
		Mini excavators	●	●	●								
		Heavy duty cylinders	●	●	●								
Duopac DPS	157	Mining equipment	●	●	●	-	40-250		X	-30/ +130	0.5	40	Fabric reinforced NBR + POM
		Presses	●	●	●								
		Steel mills	●	●	●								
		Water hydraulic	●	●	●								
Veepac CH	165	Presses	●	●	●	-	20-545	X		-30/ +130	0.5	40	Fabric reinforced Rubber + POM
		Steel mills	●	●	●								
		Ship hydraulic	●	●	●								
		Scrape shears	●	●	●								
		Civil engineering	●	●	●								
		Continous casting	●	●	●								
		Special hydraulic cylinders	●	●	●								
		Water locks	●	●	●								
Veepac CH/G1	171	Mining equipment	●	●	●	-	40-250	X		-30/ +200	0.5	40	Fabric reinforced Rubber
		Excavators	●	●	●								
		Steel mills	●	●	●								
		Presses	●	●	●								
Selemaster DSM	177	Mining equipment	●	●	●	-	45-360		X	-30/ +130	0.5	70	Fabric reinforced Rubber + POM
		Excavators	●	●	●								
		Steel mills	●	●	●								
		Presses	●	●	●								

* The data below are maximum values and cannot be used at the same time. The max. pressure depends on temperature and gap dimension.

** Temperature Range is depending on choise of elastomer material and Media.
In the case of Turcon® seals in unpressurized applications in temperatures below 0 °C please contact our application engineers for assistance!

■ Design Instructions

Lead in chamfers

Piston seals are always fitted with an interference fit. In order to avoid damage during installation, lead-in chamfers and rounded edges must be provided on the cylinder barrel (Figure 1). If this is not possible for design reasons, a separate installation tool must be used.

The minimum lead-in chamfer depends on the profile size of the seal and can be seen from the following tables.

Generally ΔD_N min. from Table II, Table III and Table IV is recommended but ΔD_N must also exceed 0.015 x bore diameter D_N (relevant for big diameter cylinders).

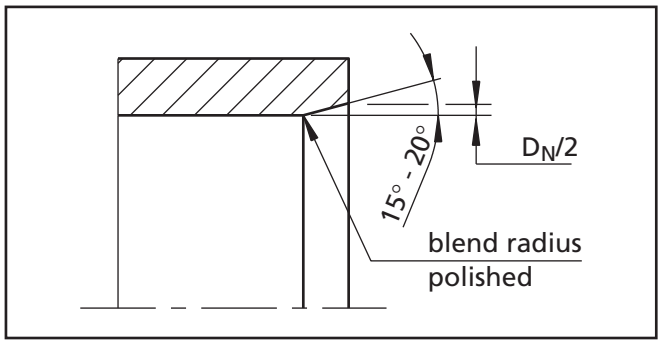

Figure 1 Lead-in chamfer

Table II Elastomer Energized Seals

Lead-in Chamfer Diameter increase ΔD_N min.	Groove Width L1*
1.1	2.2
1.4	3.2
1.9	4.2
2.7	6.3
3.5	8.1
4.0	9.5
5.5	13.8

* The groove width can be found in table "Installation dimensions" for Turcon® Glyd Ring®, Turcon® Glyd Ring® T, Turcon® AQ-Seal® 5, Turcon® Stepseal® 2K, Turcon® Stepseal® V, Zurcon® Wynseal M and Turcon® AQ-Seal®.

Table III Compact Seal and Variseal®

Lead-in Chamfer Diameter increase ΔD_N min.	Compact Seal Groove Depth**	Turcon® Variseal® M2 Series
1.1	3.5	
1.1	4.0	
1.4	5.0	
2.2	7.5	PVA0
2.7	10.0	PVA1,PVA2
3.5	12.5	
4.0	15.0	PVA3
5.5	20.0	
6.5		PVA4
9.5		PVA5

** The groove depth is calculated as (D - D1)/2. The dimensions for D and D1 can be found in the tables "Installation dimensions", from chapter Compact Seal DAS and DBM.

Table IV Double Delta®

Lead-in Chamfer*** Diameter increase ΔD_N min.	O-Ring Cross Section**** d_2	
1.1	1.78	-
1.4	2.40	2.62
1.9	3.00	3.53
2.7	5.33	5.70
3.5	7.00	8.40

*** Though not less than 1.5 % of service diameter (bore/rod diameter).

**** The O-Ring cross section d_2 can be found in the in the appropriate table "Installation dimensions", from chapter Double Delta®.

Surface Roughness DIN EN ISO 4287

The functional reliability and service life of a seal depend to a very great extent on the quality and surface finish of the mating surface to be sealed.

Scores, scratches, pores, concentric or spiral machining marks are not permitted. Higher demands must be made on the surface finish of dynamic surfaces than of static mating surfaces.

The characteristics most frequently used to describe the surface microfinish R_a, R_z and R_{max} are defined in DIN EN ISO 4287. These characterics alone, however, are not sufficient for assessing the suitability in seal technology. In addition the material contact area of the surface roughness profile R_{mr} in accordance with DIN EN ISO 4287 should be demanded. The significance of this surface specification is illustrated in Figure 2. It shows clearly that specification of R_a and R_z alone does not describe the surface roughness profile accurately enough for the seal technology and is thus not sufficient for assessing the suitability. The material contact area R_{mr} is essential for assessing surfaces, as this parameter is determined by the specific surface roughness profile. This in turn is directly dependent on the machining process employed.

Trelleborg Sealing Solutions recommends that the following surface finishes be observed:

Table V Surface Roughness

Surface Roughness µm			
Parameter	Mating Surface		Groove Surface
	Turcon® Materials	Zurcon® and Rubber	
R_{max}	0.63 - 2.50	1.00 - 4.00	< 16.0
$R_{z\ DIN}$	0.40 - 1.60	0.63 - 2.50	< 10.0
R_a	0.05 - 0.20	0.10 - 0.40	< 1.6

The material contact area R_{mr} should be approx. 50 to 70%, determined at a cut depth c = 0.25 x R_z, relative to a reference line of $C_{ref.}$ 5%.

Surface profile	R_a	R_z	R_{mr}
closed profile form	0.1	1.0	70%
open profile form 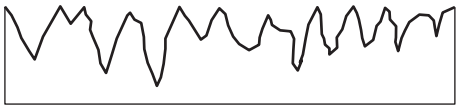	0.2	1.0	15%

Figure 2 Profile forms of surfaces

Figure 2 shows two surface profiles, both of which exhibit nearly the same value for R_z in the test procedure. The difference becomes obvious only when the material contact area of the surface roughness profiles are compared. These show that the upper roughness profile with R_{mr} = 70% has the better seal/mating surface ratio.

■ Installation of Piston Seals

General Installation Instructions

The following points should be observed before installation of the seals:

- Ensure the cylinder tube has a lead in chamfer; if not, use an installation sleeve
- Deburr and chamfer or round sharp edges, cover the tips of screw threads
- Remove machining residues such as chips, dirt and other foreign particles and carefully clean all parts
- The seals can be installed more easily if they are greased or oiled. Attention must be paid to the compatibility of the seal materials with these lubricants. Use only grease without solid additives (e.g. molybdenum disulphide or zinc sulphide).
- Use no sharp-edged installation tools

Installation in Split Grooves

Installation in split grooves is simple. The sequence of installation corresponds to the configuration of the seal. Individual seal elements must not be allowed to twist. During final installation (installation of the piston in the cylinder), elastomer or spring-preloaded seals must be sized. The corresponding cylinder barrel can be used for this purpose, provided it has a long lead-in chamfer. Alternatively, a sizing sleeve should be used.

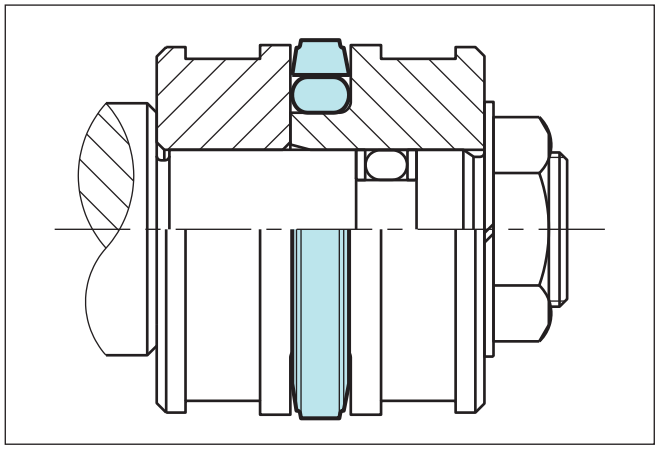

Figure 3 Installation in a split groove

Installation in Closed Grooves

- Without installation aids

  Observing the instructions in the chapter "General installation instructions", installation of Compact Seal and Wynseal seal elements in closed grooves is relatively simple.

For Turcon® and Zurcon® seals, the use of installation aids is recommended. If installation has to be performed without installation aids, however, the following points should be observed:

Turcon® seals can be installed more easily by heating in oil, water or using a hot air fan to approx. 80 °C to 100 °C (expanding and then shrinking back to the original form).

Use no sharp edged tools to expand the seal rings.

Sizing of the seal ring is achieved with a separate sizing sleeve, or with the cylinder tube provided this has lead-in chamfers equivalent to 2 x the values from Table II.

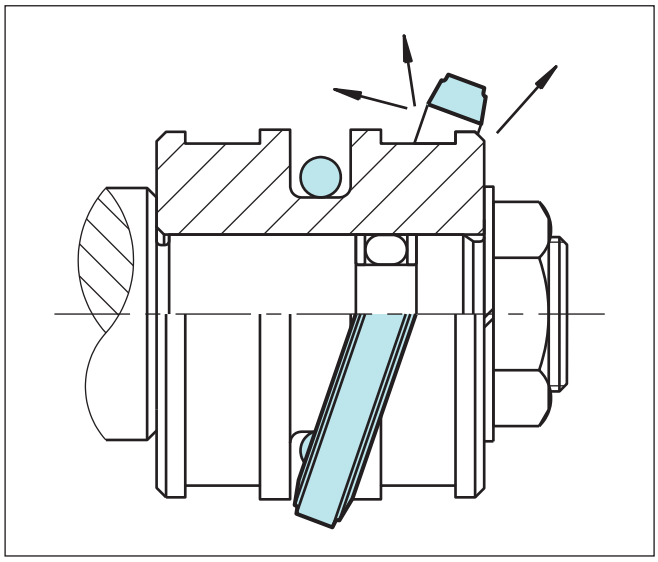

Figure 4 Fitting the seal ring onto the O-Ring in the groove

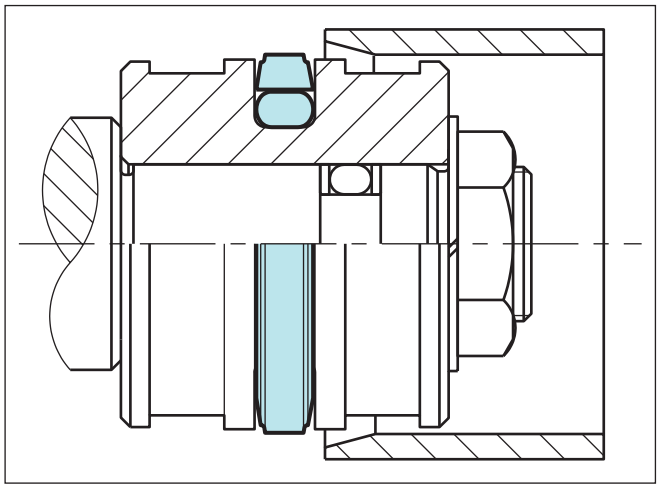

Figure 5 Sizing of the installed seal

Installation in Closed Grooves

- With installation aids

Use of a three-piece installation tool is recommended for the series production installation of Turcon® and Zurcon® seal elements. The tool consists of:

- Installation sleeve
- Expanding sleeve
- Sizing sleeve

All these parts should be made of a polymer material (e.g. PA6) with good sliding characteristics and low abrasiveness to avoid damage to the seals.

In view of the wide range of sizes and the application-specific installation conditions, these installation tools cannot be supplied as standard by Trelleborg Sealing Solutions.

On request, however, we will gladly provide specimen drawings to allow you to manufacture these tools.

The sequence of installation is illustrated in Figure 6 to Figure 8. Note, however, that the installation of Turcon® seal elements should be performed quickly in order to ensure optimum recovery of the seal ring.

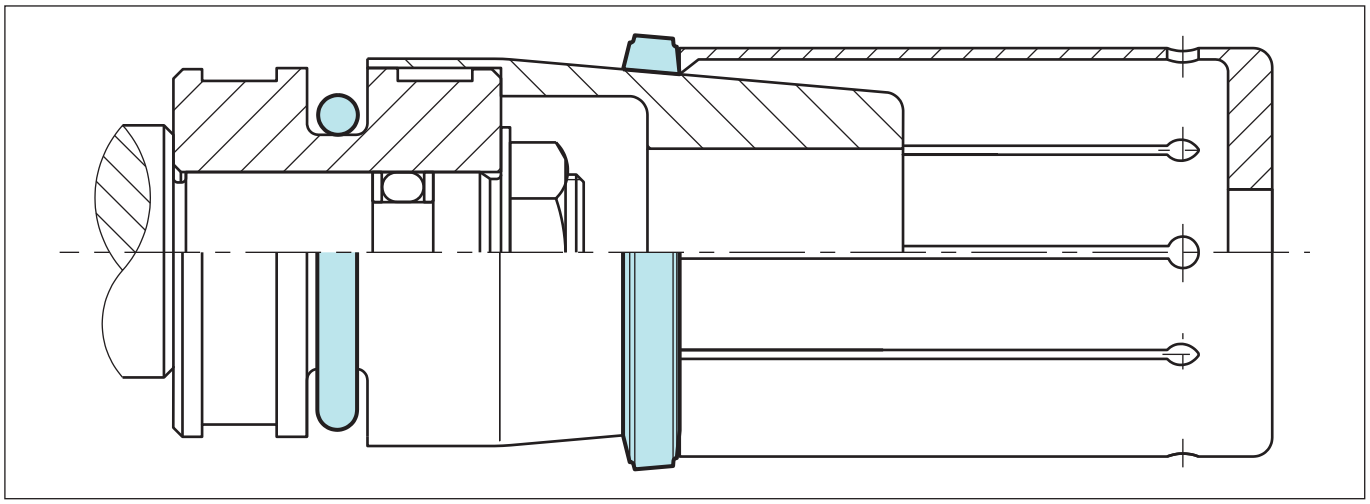

Figure 6 Expanding the Turcon® or Zurcon® sealing element using an expanding sleeve over the installation sleeve

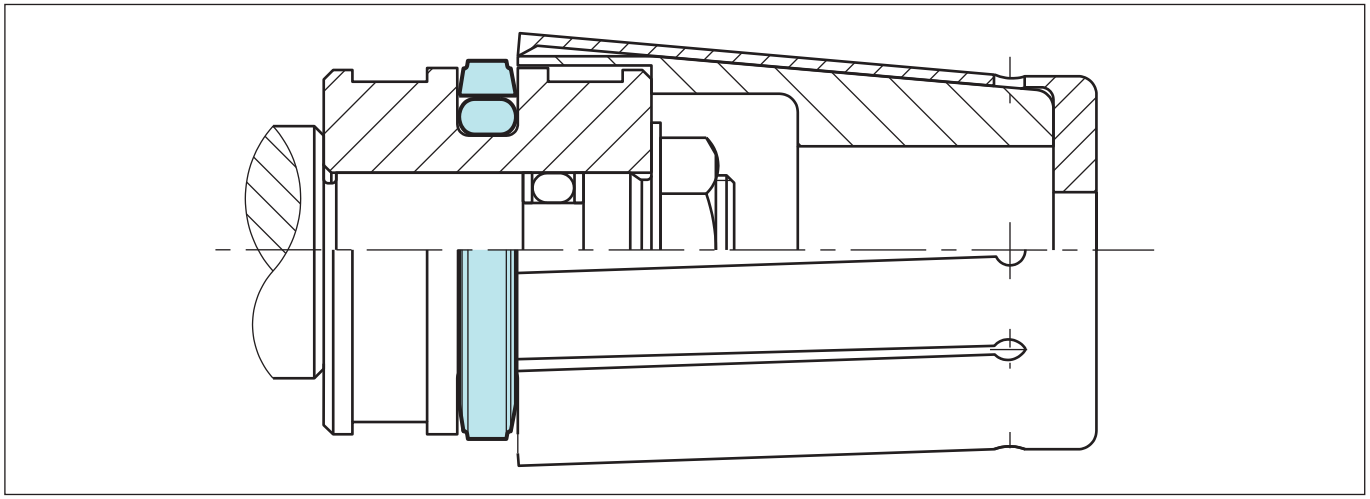

Figure 7 Sealing element after snapping into the groove

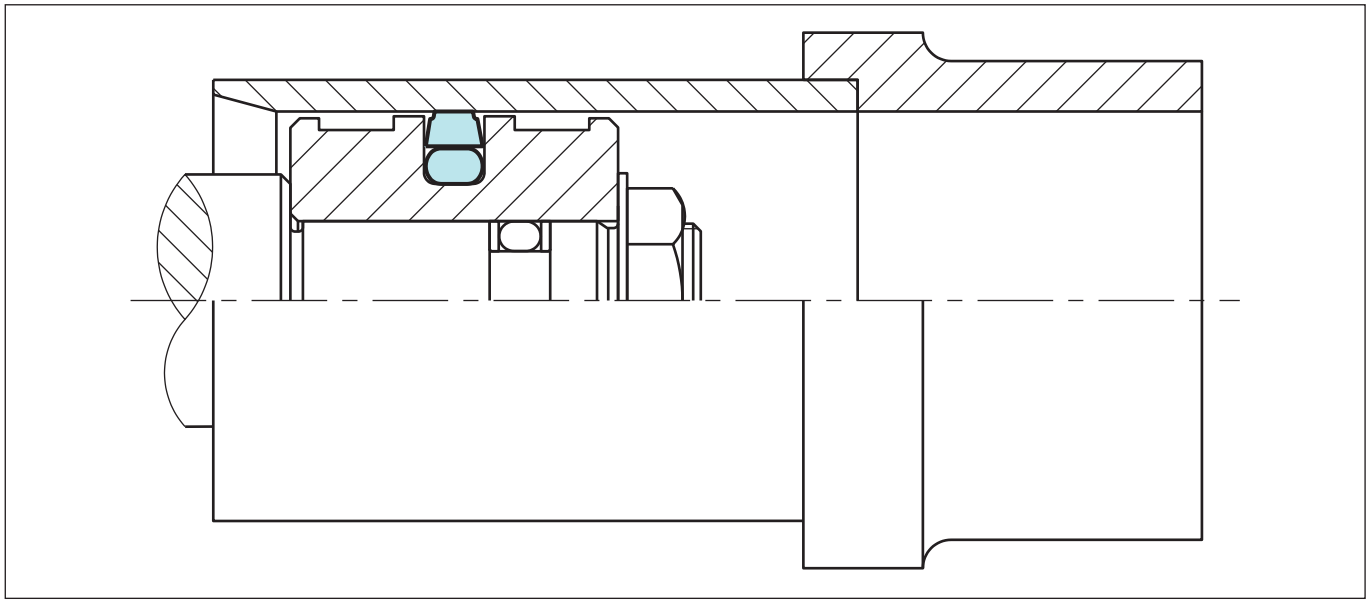

Figure 8 Sizing the sealing element with sizing sleeve

Installation of Turcon® Double Delta®

Installation in closed grooves is possible from 8 mm bore diameter. For diameters smaller than 50 mm a loading mandrel (Figure 9) is recommended. After installation the seal must be calibrated, this may be done with the lead-in chamfer of the cylinder tube or by means of a separate calibration sleeve.

- Turcon® piston seals can be installed more easily by heating to approx. 80 °C to 100 °C (expanding and then shrinking back to the original form).

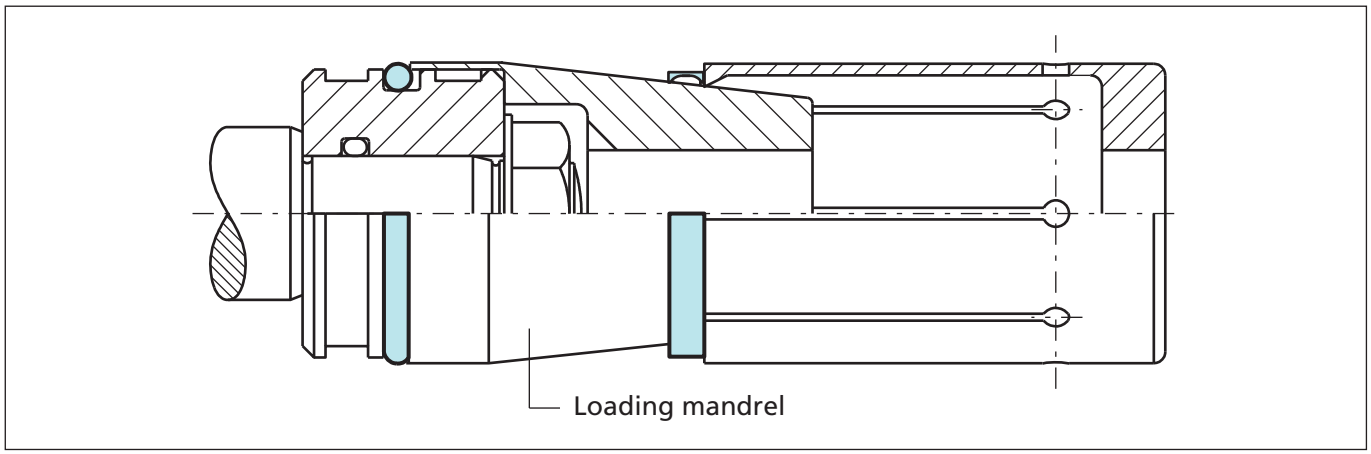

Figure 9 Installation in a closed groove

Installation for Turcon® VL Seal®

Installation in closed grooves is possible for diameters according to Table VI.

The O-Ring is inserted in the groove and located at the side of the groove, where after the seal is pushed over the loading mandrel and into the groove, note the difference in design of the pusher and the loading mandrel depending on direction of installation, see Figure 10. After insertion in the groove the seal is preferably calibrated before the piston is inserted in the cylinder.

- Turcon® piston seals can be installed more easily by heating to approx. 80 °C to 100 °C (expanding and then shrinking back to the original form).

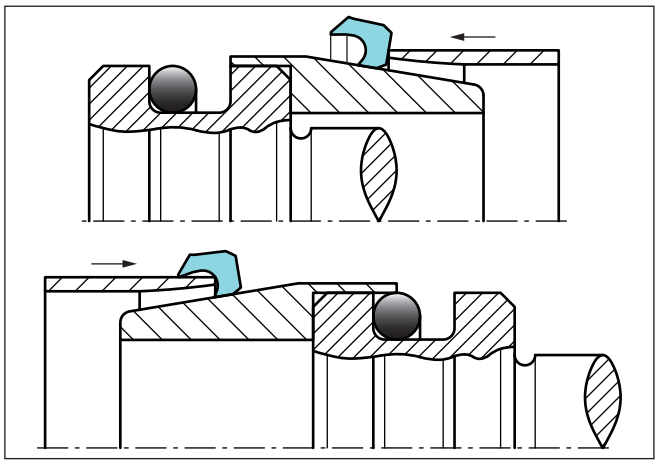

Figure 10 Installation of Piston VL Seal® in closed groove

Table VI Closed groove installation for VL Seal®

VL Seal® for Piston		
Type	Diameter	
PEL1	From	Ø 40 mm
PEL2	From	Ø 60 mm
PEL3	From	Ø 100 mm
PEL4	From	Ø 135 mm
PEL5	From	Ø 175 mm
PEL6	From	Ø 400 mm

Installation of Spring Energized Seals

Turcon® Variseal® seals should preferably be installed in split grooves. Installation in half-open grooves is possible with a snap fitting. Figure 11 shows the design of the groove.

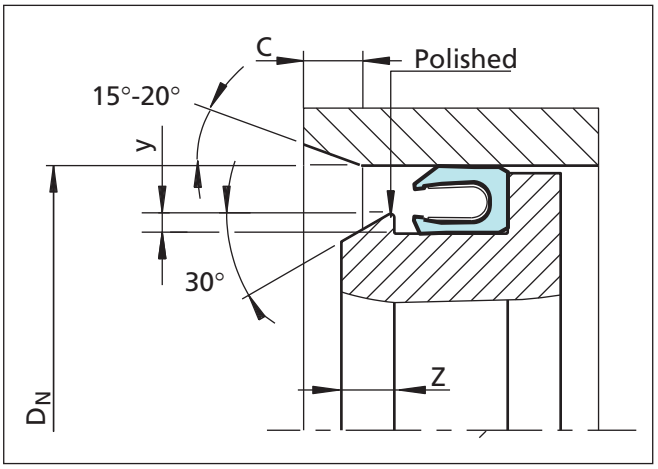

Figure 11 Installation in a half-open groove

Table VII Installation in Half-Open Grooves

Series No.	D_N min.	Y min.	C min.	Z min.
PVA0	6.0	0.4	4.0	2.5
PVA1	10.0	0.6	5.0	3.5
PVA2	16.0	0.7	5.0	3.5
PVA3	28.0	0.8	7.5	4.5
PVA4	45.0	0.9	12.0	7.5
PVA5	65.0	1.5	12.0	7.5

For further details, see chapter Turcon® Variseal®

In exceptional cases or with existing designs, an installation in closed grooves is also possible. The details in Table VIII should be regarded as guide values for installation.

Table VIII Installation in closed grooves

Series No.	D_N min.
PVA0	35.0
PVA1	50.0
PVA2	70.0
PVA3	105.0
PVA4	140.0
PVA5	220.0

Installation of the Compact Seal

The Compact Seal can be installed in one-piece or split pistons. On one-piece pistons, the inner rubber- elastic sealing element is first installed in the middle of the groove diameter by expanding over the piston. Then the cut Back-up Ring are fitted on both sides of the sealing element and then the two cut guide rings are installed.

On split pistons the individual parts are installed in the following order: Guide ring, Back-up Ring, sealing element, Back-up Ring, Guide ring.

Before installation all seal parts, including piston and cylinder, should be oiled or greased.

Turcon® Glyd Ring®

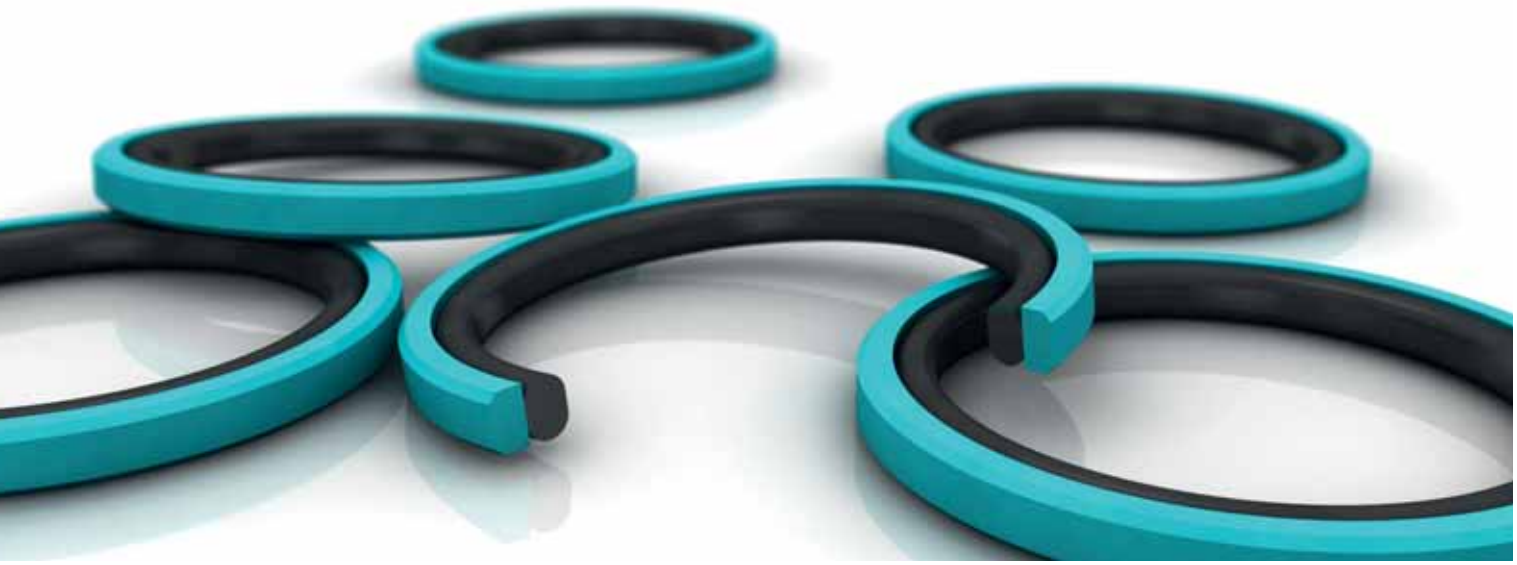

Double Acting

Rubber Energized Plastic Faced Seal

Material:
Turcon®, Zurcon® and Elastomer

■ Turcon® Glyd Ring®

Description

Successfully used for decades, the Tucon® Glyd Ring® is a very effective and reliable low frictional seal. It is particularly suitable as a piston seal in both high and low pressure systems.

The double acting Tucon® Glyd Ring® is a combination of a Turcon based slipper seal and an energising O-Ring. It is produced with an interference fit which together with the squeeze of the O-Ring ensures a good sealing effect even at low pressure. At higher system pressures, the O-Ring is energised by the fluid, pushing the Turcon® Glyd Ring® against the sealing face with increased force.

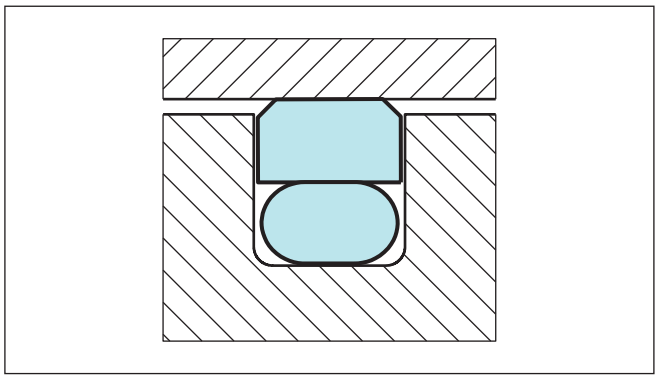

Figure 12 Turcon® Glyd Ring®

The geometry of the Tucon® Glyd Ring® ensures a good static sealing and allows the lubricating hydrodynamic oil film to be build under the seal in reciprocating applications.

Notches
To assure that a rapid energising of the seal takes place at sudden changes of pressure and direction of motion, radial "notches" are machined on both sides of the seal.

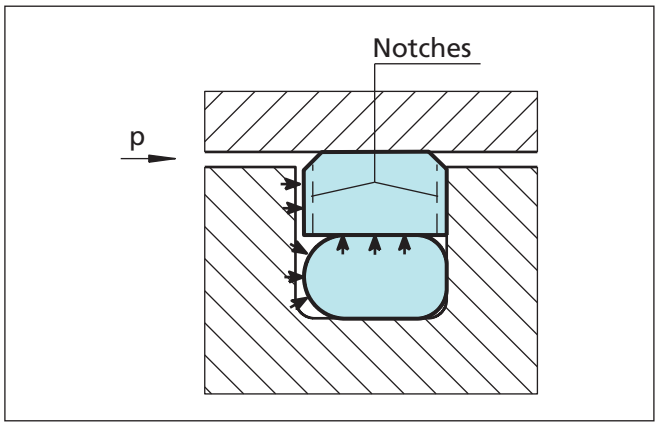

Figure 13 Turcon® Glyd Ring® with notches

Notches are standard on the following series and diameters
PG 42 for bore dia. > 30 mm
PG 44 for bore dia. > 20 mm
PG 46 for bore dia. > 40 mm

Advantages

- No stick-slip effect when starting for smooth operation
- Minimum static and dynamic friction coefficient for a minimum energy loss and operating temperature
- Suitable for non lubricating fluids depending on seal material for optimum design flexibility
- High wear resistance ensures long service life
- Installation grooves acc. to ISO 7425/1
- No adhesive effect to the mating surface during long period of inactivity or storage
- Suitable for most hydraulic fluids in relation with most modern hardware materials and surface finish depending on material selected.
- Suitable for new environmentally safe hydraulic fluids
- Available for all cylinder diameters up to 2.700 mm.

Application Examples

Over several decades the Turcon® Glyd Ring® has been successfully implemented in a large variety of applications as double acting Piston seals of hydraulic components such as:

- Injection moulding machines
- Machine tools
- Presses
- Excavators
- Forklifts & handling machinery
- Agriculture equipment
- Valves for hydraulic & pneumatic circuits
- Servo equipment
- Pressure intensifiers
- Jacks

Technical Data

Operating conditions:

The Turcon® Glyd Ring® is recommended for reciprocating (with a length of stroke at least twice the groove width) and helical movements.

Pressure:	Up to 60 MPa
Speed:	Up to 15 m/s
Frequency:	Up to 5 Hz.
Temperature:	-45 °C to +200 °C *) (depending on O-Ring Material)
Media:	Mineral oil based hydraulic fluids, flame retardant hydraulic fluids, environmentally safe hydraulic fluids (bio-oils), phosphate ester, water and others, depending on the seal and O-Ring material compatibility (see Table X)
Clearance:	The maximum permissible radial clearance S_{max} is shown in the Table XI as a function of the operating pressure and functional diameter.

Important Note:
The above data are maximum values and cannot be used at the same time. e.g. the maximum operating speed depends on material type, pressure, temperature and gap value. Temperature range also dependent on medium.

*) In the case of unpressurized applications in temperatures below 0°C please contact our application engineers for assistance!

Materials

The following material combinations have proven effective for hydraulic applications:

For light to heavy applications with reciprocating movements in mineral oils and other media with good lubrication:

All round material for hydraulic applications with reciprocating, short stroke or helical movements in mineral oils, flame retardant hydraulic fluids HFC, phosphate ester, bio-oils or fluids having less satisfactory lubricating properties:

Turcon® Glyd Ring®:	Turcon® M12	
O-Ring:	NBR, 70 Shore A FKM, 70 Shore A	N V
Set code:	M12N or M12V	

For medium to heavy applications with reciprocating movements in mineral oils and other media with good lubrication:

Turcon® Glyd Ring®:	Turcon® T46	
O-Ring:	NBR, 70 Shore A FKM, 70 Shore A	N V
Set code:	T46N or T46V	

For specific applications, all Turcon® materials are available. Other viable material combinations are listed in Table IX.

Table IX Turcon® and Zurcon® Materials for Glyd Ring®

Material, Applications, Properties	Code	O-Ring Material Shore A	Code	O-Ring Operating Temp.* °C	Mating Surface Material	MPa max. Dynamic
Turcon® M12 **First material choice** for seals in linear motion Overall improved properties For new constructions and updating For all commonly applied hydraulic fluids including fluids with low lubrication performance Lowest friction and best sliding properties Lowest wear on seals Improved absorption of abrasive contaminants No wear or abrasion of counter surface Mineral fibre and Additives filled Colour: Dark grey	M12	NBR - 70	N	-30 to +100	Steel Steel hardened Steel chrome plated (rod) Steel plated (rod) Cast iron Stainless steel Titanium	50
		NBR - 70 Low temp	T	-45 to +80		
		FKM - 70	V	-10 to +200		
Turcon® T05 For lubricating fluids Also for gas service Very low friction Very good sliding and sealing properties Colour: Turquoise	T05	NBR - 70	N	-30 to +100	Steel hardened Steel chrome plated (rod)	20
		NBR - 70 Low temp.	T	-45 to +80		
		FKM - 70	V	-10 to +200		
Turcon® T08 For lubricating fluids and linear motion **Very high compressive strength and extrusion resistance** Hard counter surfaces is recommended Bronze filled Colour: Light to dark brown, which may have variations in shading	T08	NBR - 70	N	-30 to +100	Steel hardened Steel chrome plated (rod) Cast iron	60
		NBR - 70 Low temp.	T	-45 to +80		
		FKM - 70	V	-10 to +200		
Turcon® T10 For hydraulic and pneumatic For lubricating and non-lubricating fluids High extrusion resistance Good chemical resistance Not for electrically conducting fluids BAM tested Carbon, graphite filled Colour: Black	T10	NBR - 70	N	-30 to +100	Steel Steel hardened Steel chrome plated (rod) Stainless steel	40
		NBR - 70 Low temp.	T	-45 to +80		
		FKM - 70	V	-10 to +200		
		EPDM-70	E**	-45 to +145		
Turcon® T29 For lubricating and non-lubricating fluids Good extrusion resistance Surface texture is not suitable for gas sealing Not for electrically conducting fluids Carbon fibre filled Colour: Grey	T29	NBR - 70	N	-30 to +100	Steel Steel hardened Steel chrome plated (rod) Cast iron Stainless steel	30
		NBR - 70 Low temp.	T	-45 to +80		
		FKM - 70	V	-10 to +200		
		EPDM- 70	E**	-45 to +145		
Turcon® T40 For lubricating and non-lubricating fluids High frequency and short strokes **Water hydraulics** Surface texture is not suitable for gas sealing Carbon fibre filled Colour: Grey	T40	NBR - 70	N	-30 to +100	Steel Steel hardened Steel chrome plated (rod) Cast iron Stainless steel Aluminium	25
		NBR - 70 Low temp.	T	-45 to +80		
		FKM - 70	V	-10 to +200		
		EPDM- 70	E**	-45 to +145		

* The O-Ring Operation Temperature is only valid in mineral hydraulic oil (except EPDM). ** Material not suitable for mineral oils.
*** max. Ø 2300 mm BAM: Tested by "Bundesanstalt Materialprüfung, Germany". Highlighted materials are standard.

Material, Applications, Properties	Code	O-Ring Material Shore A	Code	O-Ring Operating Temp.* °C	Mating Surface Material	MPa max. Dyna-mic
Turcon® T46 For lubricated hydraulics in linear motion High compressive strength High extrusion resistance Very good sliding and wear properties BAM tested Bronze filled Colour: Light to dark brown, which may have variations in shading	T46	NBR - 70	N	-30 to +100	Steel hardened Steel chrome plated (rod) Cast iron	50
		NBR - 70 Low temp.	T	-45 to +80		
		FKM - 70	V	-10 to +200		
Zurcon® Z51*** For mineral oil based fluids **Very high abrasion and extrusion resistance** For counter surface with rougher surface finish Limited chemical resistance Max. working temperature 110 °C Cast polyurethane Colour: Yellow to light-brown	Z51	NBR - 70	N	-30 to +100	Steel Steel hardened Steel chrome plated (rod) Cast iron Stainless steel Ceramic coating	60
		NBR - 70 Low temp.	T	-45 to +80		
Zurcon® Z80 For lubricating and non-lubricating fluids Water based fluids, air and gases Dry air pneumatics High abrasion and extrusion resistance For service in abrasive conditions and media with particles Good chemical resistance Limited temperature capability (-60 to +80 °C) UHMWPE (Ultra High Molecular Weight Polyethylene) Colour: White to off-white	Z80	NBR - 70	N	-30 to (+100)	Steel Steel hardened Steel chrome plated (rod) Stainless steel Aluminium Ceramic coating	35
		NBR - 70 Low temp.	T	-45 to +80		
		EPDM- 70	E**	-45 to (+145)		

* The O-Ring Operation Temperature is only valid in mineral hydraulic oil (except EPDM). ** Material not suitable for mineral oils.
*** max. Ø 2300 mm BAM: Tested by "Bundesanstalt Materialprüfung, Germany". Highlighted materials are standard.

■ Installation Recommendation

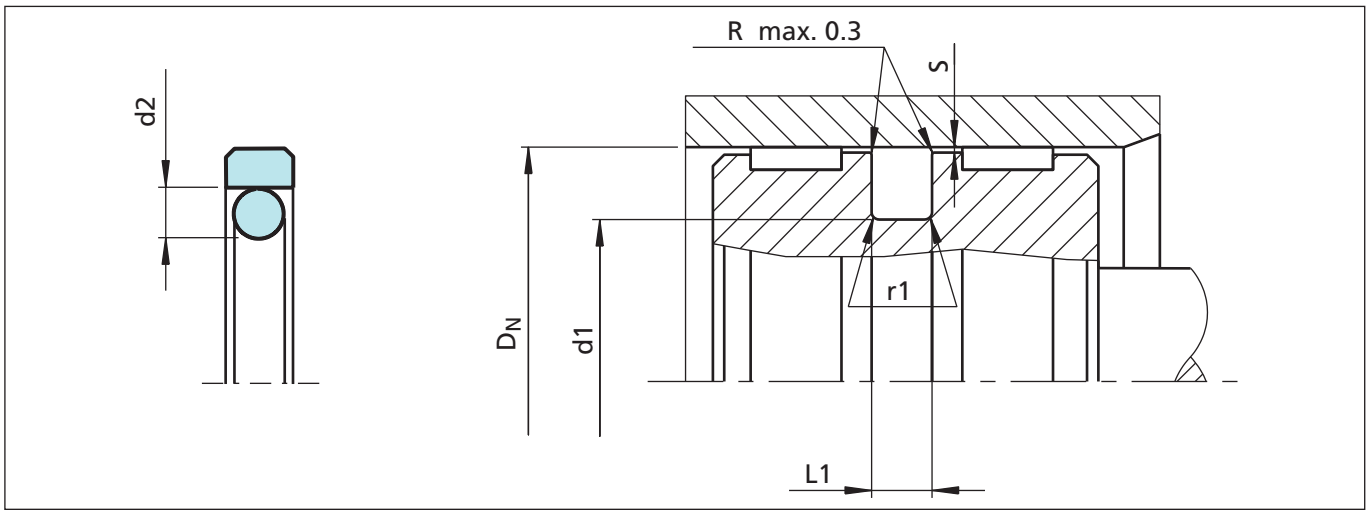

Figure 14 Installation drawing

Table X Installation dimensions

Bore Diameter D_N H9			Groove Diameter	Groove Width	Radius	Radial Clearance S max.*			O-Ring Cross-Section
Series No. PG 44	**Series No. PG 46**	**Series No. PG 42**							
Standard Application	**Light Application**	**Heavy Duty Application**	d_1 h9	L_1 +0.2	r_1	**10 MPa**	**20 MPa**	**40 MPa**	d_2
8 - 14.9	15 - 39.9	-	D_N - 4.9	2.2	0.4	0.30	0.20	0.15	1.78
15 - 39.9	40 - 79.9	-	D_N - 7.5	3.2	0.6	0.40	0.25	0.15	2.62
40 - 79.9	80 - 132.9	15 - 39.9	D_N - 11.0	4.2	1.0	0.40	0.25	0.20	3.53
80 - 132.9	133 - 329.9	40 - 79.9	D_N - 15.5	6.3	1.3	0.50	0.30	0.20	5.33
133 - 329.9	330 - 669.9	80 - 132.9	D_N - 21.0	8.1	1.8	0.60	0.35	0.25	7.00
330 - 669.9	670 - 999.9	133 - 329.9	D_N - 24.5	8.1	1.8	0.60	0.35	0.25	7.00
670 - 999.9	≥ 1000	330 - 669.9	D_N - 28.0	9.5	2.5	0.70	0.50	0.30	8.40
≥ 1000	≥ 1000	≥ 1000	D_N - 38.0	13.8	3.0	1.00	0.70	0.60	12.00

* At pressures **> 40 MPa** use diameter tolerance H8/f8 (bore/piston) in area of the seal or consult TSS for alternative material or profiles.
TSS Slydring® / Wear Rings are not applicable at very small radical clearance S. Please consult the Slydring® catalog.
O-Rings with 12 mm cross section are delivered as special profilring.

Ordering Example

Turcon® Glyd Ring®, complete with O-Ring, standard application, Series PG44 (from Table X).
Bore diameter: D_N = 80.0 mm
TSS Part No.: PG4400800 (from Table XI)

Select the material from Table IX. The corresponding code numbers are appended to the TSS Part No. Preferred Series (Table XI).
Together they form the TSS Article Number. The TSS Article Number for all intermediate sizes not shown in Preferred Series (Table XI) can be determined following the example opposite.

TSS Article No. PG44 0 0800 - M12 N

- TSS Series No. → PG44
- Type (Standard) → 0
- Bore diameter x 10* → 0800
- Quality Index (Standard) → -
- Material code (Seal ring) → M12
- Material code (O-Ring) → N

* For diameters $D_N \geq 1000.0$ mm multiply only by factor 1.
Example: PG44 for diameter D_N 1200.0 mm.
TSS Article No.: PG44**X1200** - M12N.

Table XI Installation dimensions / TSS Part No.

Bore Dia. D_N H9	Groove Dia. d_1 h9	Groove Width L_1 +0.2	TSS Part No.	O-Ring Dimensions
8.0	3.1	2.2	PG4400080	2.90 x 1.78
10.0	5.1	2.2	PG4400100	4.80 x 1.8
12.0	7.1	2.2	PG4400120	6.70 x 1.8
14.0	9.1	2.2	PG4400140	8.75 x 1.8
15.0	7.5	3.2	PG4400150	7.59 x 2.62
16.0	**11.1**	**2.2**	**PG4600160**	**10.82 x 1.78**
16.0	**8.5**	**3.2**	**PG4400160**	**7.59 x 2.62**
18.0	13.1	2.2	PG4600180	12.42 x 1.78
18.0	10.5	3.2	PG4400180	9.19 x 2.62
19.05	11.55	3.2	PG4400190	10.77 x 2.62
20.0	**15.1**	**2.2**	**PG4600200**	**14.00 x 1.78**
20.0	**12.5**	**3.2**	**PG4400200**	**12.37 x 2.62**
21.0	13.5	3.2	PG4400210	12.37 x 2.62
22.0	17.1	2.2	PG4600220	17.17 x 1.78
22.0	14.5	3.2	PG4400220	13.94 x 2.62
24.0	16.5	3.2	PG4400240	15.54 x 2.62
25.0	20.1	2.2	PG4600250	18.77 x 1.78
25.0	**17.5**	**3.2**	**PG4400250**	**17.12 x 2.62**
25.0	**14.0**	**4.2**	**PG4200250**	**13.87 x 3.53**
25.4	20.5	2.2	PG4600254	17.12 x 2.62
28.0	20.5	3.2	PG4400280	20.29 x 2.62
30.0	22.5	3.2	PG4400300	21.89 x 2.62
32.0	27.1	2.2	PG4600320	26.70 x 1.78
32.0	**24.5**	**3.2**	**PG4400320**	**23.47 x 2.62**
32.0	**21.0**	**4.2**	**PG4200320**	**20.22 x 3.53**
35.0	27.5	3.2	PG4400350	26.64 x 2.62
35.0	24.0	4.2	PG4200350	23.40 x 3.53
36.0	28.5	3.2	PG4400360	28.24 x 2.62
38.0	30.5	3.2	PG4400380	29.82 x 2.62
40.0	**32.5**	**3.2**	**PG4600400**	**31.42 x 2.62**
40.0	**29.0**	**4.2**	**PG4400400**	**28.17 x 3.53**
42.0	31.0	4.2	PG4400420	29.75 x 3.53
44.45	36.95	3.2	PG4600444	36.17 x 2.62
45.0	34.0	4.2	PG4400450	32.92 x 3.53
48.0	37.0	4.2	PG4400480	36.09 x 3.53
50.0	42.5	3.2	PG4600500	40.94 x 2.62
50.0	**39.0**	**4.2**	**PG4400500**	**37.70 x 3.53**
50.0	**34.5**	**6.3**	**PG4200500**	**32.69 x 5.33**
50.8	43.3	3.2	PG4600508	42.52 x 2.62
50.8	39.8	4.2	PG4400508	37.70 x 3.53
52.0	41.0	4.2	PG4400520	40.87 x 3.53
53.0	42.0	4.2	PG4400530	40.87 x 3.53
55.0	44.0	4.2	PG4400550	44.04 x 3.53
57.0	46.0	4.2	PG4400570	44.04 x 3.53
58.0	47.0	4.2	PG4400580	47.22 x 3.53
60.0	49.0	4.2	PG4400600	47.22 x 3.53
62.0	51.0	4.2	PG4400620	50.39 x 3.53
63.0	**52.0**	**4.2**	**PG4400630**	**50.39 x 3.53**
63.0	**47.5**	**6.3**	**PG4200630**	**46.99 x 5.33**
65.0	54.0	4.2	PG4400650	53.57 x 3.53
68.0	57.0	4.2	PG4400680	56.74 x 3.53
70.0	59.0	4.2	PG4400700	56.74 x 3.53
70.0	54.5	6.3	PG4200700	53.34 x 5.33
75.0	64.0	4.2	PG4400750	63.09 x 3.53

Bore Dia. D_N H9	Groove Dia. d_1 h9	Groove Width L_1 +0.2	TSS Part No.	O-Ring Dimensions
75.0	59.5	6.3	PG4200750	56.52 x 5.33
80.0	**69.0**	**4.2**	**PG4600800**	**66.27 x 3.53**
80.0	**64.5**	**6.3**	**PG4400800**	**62.87 x 5.33**
80.0	59.0	8.1	PG4200800	58 x 7.0
82.5	67.0	6.3	PG4400825	66.04 x 5.33
85.0	69.5	6.3	PG4400850	69.22 x 5.33
85.0	64.0	8.1	PG4200850	63 x 7.0
90.0	79.0	4.2	PG4600900	78.97 x 3.53
90.0	74.5	6.3	PG4400900	72.39 x 5.33
90.0	69.0	8.1	PG4200900	68 x 7.0
95.0	84.0	4.2	PG4600950	82.14 x 3.53
95.0	79.5	6.3	PG4400950	78.74 x 5.33
95.0	74.0	8.1	PG4200950	73 x 7.0
100.0	89.0	4.2	PG4601000	88.49 x 3.53
100.0	**84.5**	**6.3**	**PG4401000**	**81.92 x 5.33**
100.0	79.0	8.1	PG4201000	78 x 7.0
101.6	86.1	6.3	PG4401016	85.09 x 5.33
105.0	94.0	4.2	PG4601050	91.67 x 3.53
105.0	89.5	6.3	PG4401050	88.27 x 5.33
108.0	92.5	6.3	PG4401080	91.44 x 5.33
110.0	99.0	4.2	PG4601100	98.02 x 3.53
110.0	94.5	6.3	PG4401100	91.44 x 5.33
110.0	89.0	8.1	PG4201100	88 x 7.0
115.0	99.5	6.3	PG4401150	97.79 x 5.33
120.0	109.0	4.2	PG4601200	107.54 x 3.53
120.0	104.5	6.3	PG4401200	100.97 x 5.33
120.0	99.0	8.1	PG4201200	98 x 7.0
125.0	114.0	4.2	PG4601250	113.89 x 3.53
125.0	**109.5**	**6.3**	**PG4401250**	**107.32 x 5.33**
125.0	**104.0**	**8.1**	**PG4201250**	**103 x 7.0**
127.0	111.5	6.3	PG4401270	110.49 x 5.33
130.0	114.5	6.3	PG4401300	113.67 x 5.33
130.0	109.0	8.1	PG4201300	108 x 7.0
132.0	121.0	4.2	PG4601320	120.24 x 3.53
135.0	114.0	8.1	PG4401350	113.67 x 7.0
140.0	124.5	6.3	PG4601400	123.19 x 5.33
140.0	119.0	8.1	PG4401400	116.84 x 7.0
145.0	129.5	6.3	PG4601450	126.37 x 5.33
145.0	124.0	8.1	PG4401450	123.19 x 7.0

Bore Dia. D_N H9	Groove Dia. d_1 h9	Groove Width L_1 +0.2	TSS Part No.	O-Ring Dimensions
150.0	134.5	6.3	PG4601500	132.72 x 5.33
150.0	129.0	8.1	PG4401500	126.37 x 7.0
155.0	134.0	8.1	PG4401550	132.72 x 7.0
160.0	**144.5**	**6.3**	**PG4601600**	**142.24 x 5.33**
160.0	**139.0**	**8.1**	**PG4401600**	**135.89 x 7.0**
165.0	144.0	8.1	PG4401650	142.24 x 7.0
170.0	149.0	8.1	PG4401700	145.42 x 7.0
175.0	154.0	8.1	PG4401750	151.77 x 7.0
180.0	164.5	6.3	PG4601800	164.47 x 5.33
180.0	159.0	8.1	PG4401800	158.12 x 7.0
190.0	169.0	8.1	PG4401900	164.47 x 7.0
194.0	178.5	6.3	PG4601940	177.17 x 5.33
200.0	**184.5**	**6.3**	**PG4602000**	**183.52 x 5.33**
200.0	**179.0**	**8.1**	**PG4402000**	**177.17 x 7.0**
205.0	184.0	8.1	PG4402050	183.52 x 7.0
210.0	189.0	8.1	PG4402100	183.52 x 7.0
215.0	194.0	8.1	PG4402150	189.87 x 7.0
220.0	199.0	8.1	PG4402200	196.22 x 7.0
230.0	214.5	6.3	PG4602300	208.92 x 5.33
230.0	209.0	8.1	PG4402300	208.90 x 7.0
240.0	219.0	8.1	PG4402400	215.27 x 7.0
250.0	**229.0**	**8.1**	**PG4402500**	**227.97 x 7.0**
250.0	**225.5**	**8.1**	**PG4202500**	**215.27 x 7.0**
250.0	234.5	6.3	PG4602500	234.32 x 5.33
254.0	233.0	8.1	PG4402540	227.97 x 7.0
260.0	239.0	8.1	PG4402600	240.67 x 7.0
265.0	244.0	8.1	PG4402650	240.67 x 7.0
268.0	247.0	8.1	PG4402680	240.67 x 7.0
270.0	249.0	8.1	PG4402700	240.67 x 7.0
280.0	259.0	8.1	PG4402800	253.37 x 7.0
290.0	269.0	8.1	PG4402900	266.07 x 7.0
300.0	279.0	8.1	PG4403000	278.77 x 7.0
300.0	275.5	8.1	PG4203000	266.07 x 7.0
304.8	283.8	8.1	PG4403048	278.77 x 7.0
310.0	289.0	8.1	PG4403100	278.77 x 7.0
320.0	**299.0**	**8.1**	**PG4403200**	**291.47 x 7.0**
320.0	**295.5**	**8.1**	**PG4203200**	**291.47 x 7.0**
330.0	305.5	8.1	PG4403300	304.17 x 7.0
340.0	315.5	8.1	PG4403400	316.87 x 7.0

Bore Dia.	Groove Dia.	Groove Width	TSS Part No.	O-Ring Dimensions
D_N H9	d_1 h9	L_1 +0.2		
350.0	325.5	8.1	PG4403500	316.87 x 7.0
360.0	335.5	8.1	PG4403600	329.57 x 7.0
370.0	345.5	8.1	PG4403700	342.27 x 7.0
380.0	355.5	8.1	PG4403800	354.97 x 7.0
400.0	**375.5**	**8.1**	**PG4404000**	**367.67 x 7.0**
420.0	395.5	8.1	PG4404200	393.07 x 7.0
430.0	405.5	8.1	PG4404300	405.26 x 7.0
440.0	415.5	8.1	PG4404400	405.26 x 7.0
450.0	425.5	8.1	PG4404500	417.96 x 7.0
460.0	435.5	8.1	PG4404600	430.66 x 7.0
480.0	455.5	8.1	PG4404800	456.06 x 7.0
500.0	**475.5**	**8.1**	**PG4405000**	**468.76 x 7.0**
555.0	530.5	8.1	PG4405550	506.86 x 7.0
600.0	575.5	8.1	PG4406000	557.66 x 7.0
640.0	615.5	8.1	PG4406400	608.08 x 7.0
660.0	635.5	8.1	PG4406600	633.48 x 7.0
700.0	672.0	9.5	PG4407000	670 x 8.4
710.0	682.0	9.5	PG4407100	680 x 8.4
740.0	712.0	9.5	PG4407400	710 x 8.4
780.0	752.0	9.5	PG4407800	750 x 8.4
800.0	772.0	9.5	PG4408000	770 x 8.4
900.0	872.0	9.5	PG4409000	870 x 8.4
1000.0	972.0	9.5	PG46X1000	970 x 8.4
1000.0	962.0	13.8	PG44X1000	960 x 12.0
1050.0	1022.0	9.5	PG46X1050	1020 x 8.4
1065.0	1027.0	13.8	PG44X1065	1025 x 12.0
1070.0	1032.0	13.8	PG44X1070	1030 x 12.0
1200.0	1172.0	9.5	PG46X1200	1170 x 8.4
1200.0	1162.0	13.8	PG44X1200	1160 x 12.0
1225.0	1187.0	13.8	PG44X1225	1185 x 12.0
1500.0	1462.0	13.8	PG44X1500	1460 x 12.0
2000.0	1962.0	13.8	PG44X2000	1960 x 12.0
2700.0	2662.0	13.8	PG44X2700	2660 x 12.0

All dimensions in **bold** type are suitable for installation in grooves to ISO 7425/1, bore dia. in accordance with ISO 3320. Other dimensions and all intermediate sizes up to 2700 mm dia. including inch sizes can be supplied.

All O-Rings with 12 mm cross section are delivered as special Profilring.

Turcon® Glyd Ring® T

Double Acting

Rubber Energized Plastic Faced Seal

Material:
Turcon®, Zurcon® and Elastomer

■ Turcon® Glyd Ring® T*

Description

Turcon® Glyd Ring® T is a further technical development of the Turcon® Glyd Ring® seal which has been successfully used for decades. It is fully interchangeable with the earlier Glyd Ring® seals in all new applications. Glyd Ring® T meets all the market demands for a function-specific seal solution, observing economic and ecological aspects.

The benefits of the patented seal concept are provided by the innovative functional principle of the trapezoidal profile cross-section.

Both lateral profile flanks are inclined so that the seal profile tapers towards the seal surface. The profile can thus retain the robust and compact form typical of piston seals without losing any of the flexibility required to achieve a pressure-related maximum compression (Figure 15).

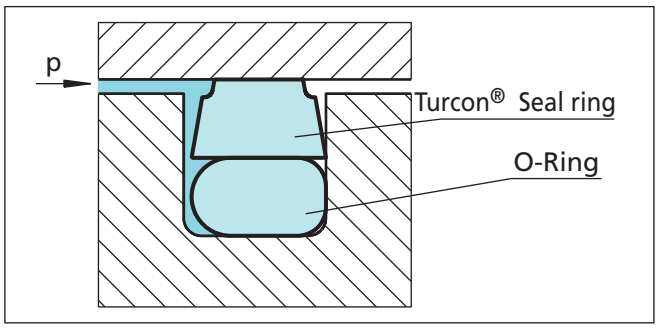

Figure 15 Turcon® Glyd Ring® T

The edge angle created by the special Glyd Ring® T crosssectional form permits an additional degree of freedom and enables a slight tilting movement of the seal. The maximum compression is thus always shifted towards the area of the seal edge directly exposed to the pressure. On the low-pressure edge of the seal, on the other hand, the Glyd Ring® T exhibits only zones with neutral strains without compressive or shearing loads, thus effectively reducing the danger of gap extrusion. The resulting benefits for the user can be seen in the following list.

Advantages

The benefits offered to date by the Glyd Ring® are still retained in full, and are now complemented by a number of further important advantages:

- Very good static leak-tightness
- Increased clearance possible (approx. +50%), depending on the operating conditions
- Due to the larger extrusion gap, safe use even with soiled media
- Low friction, no stick-slip effect
- Simple groove design, one-piece pistons possible
- Installation grooves to ISO 7425/1
- Adaptable to the operating conditions due to a wide range of possible materials (Turcon®, Zurcon®)
- Suitable for new environmentally safe hydraulic fluids
- Available for all cylinder diameters up to 2.700 mm.

Application Examples

The Turcon® Glyd Ring® T is the recommended sealing element for double acting pistons of hydraulic components such as:

- Injection moulding machines
- Machine tools
- Presses
- Excavators
- Forklifts & handling machinery
- Agriculture
- Valves for hydraulic & pneumatic circuits.
- Servo equipment
- Pressure intensifiers
- Jacks

It is particularly recommended for heavy duty and large diameter applications.

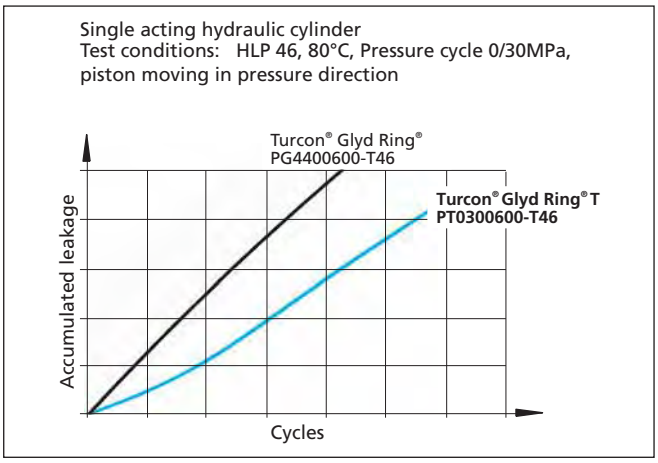

Figure 16 Dynamic leakage Turcon® Glyd Ring® T/ Turcon® Glyd Ring® as single acting piston seal

* Patent No.:
DE 4140833C3
EP 0582593
Japan 2799367
USA 5,433,452

Technical Data

Operating conditions

Pressure:	Up to 60 MPa
Speed:	Up to 15 m/s
Temperature:	-45 °C to +200 °C *) (depending on O-Ring material).
Media:	Mineral oil-based hydraulic fluids, flame retardant hydraulic fluids, environmentally safe hydraulic fluids (bio-oils), phosphate ester, water, air and others, depending on the seal and O-Ring material compatibility (see Table XIII)
Clearance:	The maximum permissible radial clearance s_{max} is shown in Table XIV, as a function of the operating pressure and functional diameter.

Important Note:
The above data are maximum values and cannot be used at the same time. e.g. the maximum operating speed depends on material type, pressure, temperature and gap value. Temperature range also dependent on medium.

*) In the case of unpressurized applications in temperatures below 0°C please contact our application engineers for assistance!

Materials

The following material combinations have proven effective for hydraulic applications:

All round material for hydraulic applications with reciprocating or short stroke in mineral oils, flame retardant hydarulic fluids HFC, phosphate ester, bio-oils or fluids having less satisfactory properties.

Turcon® Glyd Ring® T:	Turcon® M12	
O-Ring:	NBR, 70 Shore A	N
	FKM, 70 Shore A	V
Set code:	M12N or M12V	

For medium to heavy applications with reciprocating movements in mineral oils and other media with good lubrication:

Turcon® Glyd Ring® T:	Turcon® T46	
O-Ring:	NBR, 70 Shore A	N
	FKM, 70 Shore A	V
Set code:	T46N or T46V	

For specific applications, other viable material combinations are listed in Table XIII.

Series

Different cross-section sizes are recommended as a function of the seal diameters.

Table XII, shows the relationship between the series number according to the seal diameter range and the different application class sizes. These application classes are:

Standard application:	General applications in which no exceptional operating conditions exist.
Light application:	Applications with demands for reduced friction or for smaller grooves.
Heavy-duty application:	For exceptional operating loads such as high pressures, pressure peaks, etc.

Table XII Available range

Series No.	Piston Diameter D_N H9
PT00	8.0 - 140.0
PT01	8.0 - 200.0
PT02	16.0 - 380.0
PT03	40.0 - 480.0
PT04	80.0 - 700.0
PT08	133.0 - 999.9
PT05	310.0 - 999.9
PT05X	1000.0 - 1200.0
PT06	750.0 - 999.9
PT06X	1000.0 - 2700.0

For the recommended range see Table XIV.

Table XIII Turcon® and Zurcon® Materials for Glyd Ring® T

Material, Applications, Properties	Code	O-Ring Material Shore A	Code	O-Ring Operating Temp.* °C	Mating Surface Material	MPa max. Dyna-mic
Turcon® M12 **First material choice** for seals in linear motion Overall improved properties For new constructions and updating For all commonly applied hydraulic fluids including fluids with low lubrication performance Lowest friction and best sliding properties Lowest wear on seals Improved absorption of abrasive contaminants No wear or abrasion of counter surface Mineral fibre and Additives filled Colour: Dark grey	M12	NBR - 70	N	-30 to +100	Steel Steel hardened Steel chrome plated (rod) Steel plated (rod) Cast iron Stainless steel Titanium	50
		NBR - 70 Low temp.	T	-45 to +80		
		FKM - 70	V	-10 to +200		
Turcon® T40 For lubricating and non-lubricating fluids High frequency and short strokes **Water hydraulics** Surface texture is not suitable for gas sealing Carbon fibre filled Colour: Grey	T40	NBR - 70	N	-30 to +100	Steel Steel hardened Steel chrome plated (rod) Cast iron Stainless steel Aluminium	25
		NBR - 70 Low temp.	T	-45 to +80		
		FKM - 70	V	-10 to +200		
		EPDM - 70	E**	-45 to +145		
Turcon® T46 For lubricated hydraulics in linear motion High compressive strength High extrusion resistance Very good sliding and wear properties BAM tested Bronze filled Colour: Light to dark brown, which may have variations in shading	T46	NBR - 70	N	-30 to +100	Steel hardened Steel chrome plated (rod) Cast iron	50
		NBR - 70 Low temp.70	T	-45 to +80		
		FKM - 70	V	-10 to +200		
Zurcon® Z51*** For mineral oil based fluids **Very high abrasion and extrusion resistance** For counter surface with rougher surface finish Limited chemical resistance Max. working temperature 110 °C Cast polyurethane Colour: Yellow to light-brown	Z51	NBR - 70	N	-30 to +100	Steel Steel hardened Steel chrome plated (rod) Cast iron Stainless steel Ceramic coating	60
		NBR - 70 Low temp.	T	-45 to +80		
Zurcon® Z80 For lubricating and non-lubricating fluids Water based fluids, air and gases Dry air pneumatics High abrasion and extrusion resistance For service in abrasive conditions and media with particles Good chemical resistance Limited temperature capability (-60 to +80 °C) UHMWPE (Ultra High Molecular Weight Polyethylene) Colour: White to off-white	Z80	NBR - 70	N	-30 to (+100)	Steel Steel hardened Steel chrome plated (rod) Stainless steel Aluminium Ceramic coating	35
		NBR - 70 Low temp.	T	-45 to +80		
		EPDM- 70	E**	-45 to(+145)		

* The O-Ring Operation Temperature is only valid in mineral hydraulic oil (except EPDM). ** Material not suitable for mineral oils.
*** max. Ø 2300 mm BAM: Tested by "Bundesanstalt Materialprüfung, Germany". Highlighted materials are standard.

■ Installation Recommendation

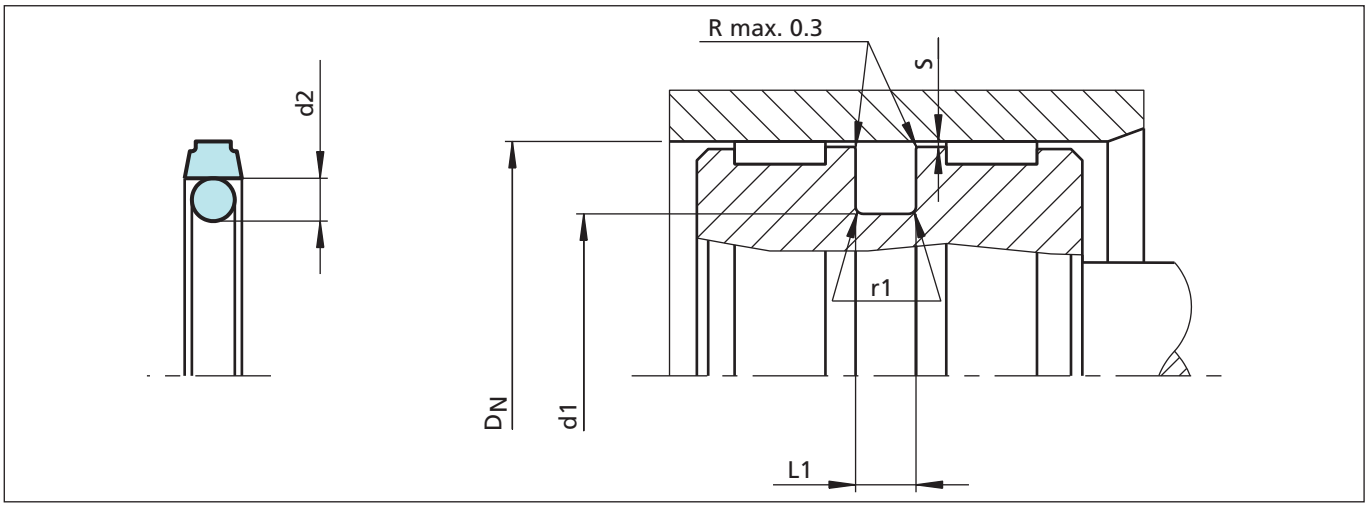

Figure 17 Installation drawing

Table XIV Installation Dimensions – Standard recommendations

Series-No.	Bore Diameter D_N H9			Groove Diameter	Groove Width	Radius	Radial Clearance S max.*			O-Ring Cross-Sec.
	Standard Application	Light Application	Heavy Duty Application	d_1 h9	L_1 +0.2	r_1	10 MPa	20 MPa	40 MPa	d_2
PT00	8 - 14.9	15 - 39.9	--	D_N - 4.9	2.2	0.4	0.40	0.30	0.20	1.78
PT01	15 - 39.9	40 - 79.9	--	D_N - 7.5	3.2	0.6	0.60	0.50	0.30	2.62
PT02	40 - 79.9	80 - 132.9	15 - 39.9	D_N - 11.0	4.2	1.0	0.70	0.50	0.30	3.53
PT03	80 - 132.9	133 - 329.9	40 - 79.9	D_N - 15.5	6.3	1.3	0.80	0.60	0.40	5.33
PT04	133 - 329.9	330 - 669.9	80 - 132.9	D_N - 21.0	8.1	1.8	0.80	0.60	0.40	7.00
PT08	330 - 669.9	670 - 999.9	133 - 329.9	D_N - 24.5	8.1	1.8	0.90	0.70	0.50	7.00
PT05	670 - 999.9	--	310 - 669.9	D_N - 28.0	9.5	2.5	1.00	0.80	0.60	8.40
PT05X	--	1000 - 1200	--	D_N - 28.0	9.5	2.5	1.00	0.80	0.60	8.40
PT06**	--	--	670 - 999.9	D_N - 38.0	13.8	3.0	1.20	0.90	0.70	12.00
PT06X**	1000 - 2700	--	--	D_N - 38.0	13.8	3.0	1.20	0.90	0.70	12.00

* At pressures **> 40 MPa** use diameter tolerance H8/f8 (bore/piston) in area of the seal or consult TSS for alternative material or profiles. TSS Slydring® / Wear Rings are not applicable at very small radical clearance S. Please consult the Slydring® catalog.
** O-Rings with 12 mm cross section are delivered as special profilring.

Ordering example

Turcon® Glyd Ring® T, complete with O-Ring, standard application, series PT03 (from Table XIV).
Bore diameter: D_N = 80.0 mm
TSS Part No.: PT0300800 (from Table XV)

Select the material from Table XIII. The corresponding code numbers are appended to the TSS Part No. (from Table XV). Together they form the TSS Article No.
For all intermediate sizes not shown in Table XV, the TSS Article No. can be determined from the example opposite.

TSS Article No. PT03 0 0800 - M12 N

- TSS Series No.
- Type (Standard)
- Cylinder diameter x 10***
- Quality Index (Standard)
- Material code (Seal ring)
- Material code (O-Ring)

*** For diameters ≥ 1000.0 mm multiply only by factor 1.
Example: PT06 for diameter 1200.0 mm.
TSS Article No.: PT06**X1200** - M12N.

Table XV Installation dimensions / TSS Part No.

Bore Dia. D_N H9	Groove Dia. d1 h9	Groove Width L_1 +0.2	TSS Part No.	O-Ring Dimensions
8.0	3.1	2.2	PT0000080	2.90 x 1.78
10.0	5.1	2.2	PT0000100	4.80 x 1.8
12.0	7.1	2.2	PT0000120	6.70 x 1.8
14.0	9.1	2.2	PT0000140	8.75 x 1.8
15.0	7.5	3.2	PT0100150	7.59 x 2.62
16.0	**11.1**	**2.2**	**PT0000160**	**10.82 x 1.78**
16.0	**8.5**	**3.2**	**PT0100160**	**7.59 x 2.62**
18.0	13.1	2.2	PT0000180	12.42 x 1.78
18.0	10.5	3.2	PT0100180	9.19 x 2.62
19.05	11.55	3.2	PT0100190	10.77 x 2.62
20.0	**15.1**	**2.2**	**PT0000200**	**14.00 x 1.78**
20.0	**12.5**	**3.2**	**PT0100200**	**12.37 x 2.62**
21.0	13.5	3.2	PT0100210	12.37 x 2.62
22.0	17.1	2.2	PT0000220	17.17 x 1.78
22.0	14.5	3.2	PT0100220	13.94 x 2.62
24.0	16.5	3.2	PT0100240	15.54 x 2.62
25.0	20.1	2.2	PT0000250	18.77 x 1.78
25.0	**17.5**	**3.2**	**PT0100250**	**17.12 x 2.62**
25.0	**14.0**	**4.2**	**PT0200250**	**13.87 x 3.53**
25.4	20.5	2.2	PT0000254	17.12 x 2.62
28.0	20.5	3.2	PT0100280	20.29 x 2.62
30.0	22.5	3.2	PT0100300	21.89 x 2.62
32.0	27.1	2.2	PT0000320	26.70 x 1.78
32.0	**24.5**	**3.2**	**PT0100320**	**23.47 x 2.62**
32.0	**21.0**	**4.2**	**PT0200320**	**20.22 x 3.53**
35.0	27.5	3.2	PT0100350	26.64 x 2.62
35.0	24.0	4.2	PT0200350	23.40 x 3.53
36.0	28.5	3.2	PT0100360	28.24 x 2.62
38.0	30.5	3.2	PT0100380	29.82 x 2.62
40.0	**32.5**	**3.2**	**PT0100400**	**31.42 x 2.62**
40.0	**29.0**	**4.2**	**PT0200400**	**28.17 x 3.53**
42.0	31.0	4.2	PT0200420	29.75 x 3.53
44.45	36.95	3.2	PT0100444	36.17 x 2.62
45.0	34.0	4.2	PT0200450	32.92 x 3.53
48.0	37.0	4.2	PT0200480	36.09 x 3.53
50.0	42.5	3.2	PT0100500	40.94 x 2.62
50.0	**39.0**	**4.2**	**PT0200500**	**37.70 x 3.53**
50.0	**34.5**	**6.3**	**PT0300500**	**32.69 x 5.33**
50.8	43.3	3.2	PT0100508	42.52 x 2.62
50.8	39.8	4.2	PT0200508	37.70 x 3.53
52.0	41.0	4.2	PT0200520	40.87 x 3.53
53.0	42.0	4.2	PT0200530	40.87 x 3.53
55.0	44.0	4.2	PT0200550	44.04 x 3.53
57.0	46.0	4.2	PT0200570	44.04 x 3.53
58.0	47.0	4.2	PT0200580	47.22 x 3.53
60.0	49.0	4.2	PT0200600	47.22 x 3.53
62.0	51.0	4.2	PT0200620	50.39 x 3.53
63.0	**52.0**	**4.2**	**PT0200630**	**50.39 x 3.53**

Bore Dia. D_N H9	Groove Dia. d1 h9	Groove Width L_1 +0.2	TSS Part No.	O-Ring Dimensions
63.0	**47.5**	**6.3**	**PT0300630**	**46.99 x 5.33**
65.0	54.0	4.2	PT0200650	53.57 x 3.53
68.0	57.0	4.2	PT0200680	56.74 x 3.53
70.0	59.0	4.2	PT0200700	56.74 x 3.53
70.0	54.5	6.3	PT0300700	53.34 x 5.33
75.0	64.0	4.2	PT0200750	63.09 x 3.53
75.0	59.5	6.3	PT0300750	56.52 x 3.53
80.0	**69.0**	**4.2**	**PT0200800**	**66.27 x 3.53**
80.0	**64.5**	**6.3**	**PT0300800**	**62.87 x 5.33**
80.0	59.0	8.1	PT0400800	58 x 7.0
82.5	67.0	6.3	PT0300825	66.04 x 5.33
85.0	69.5	6.3	PT0300850	69.22 x 5.33
85.0	64.0	8.1	PT0400850	63 x 7.0
90.0	79.0	4.2	PT0200900	78.97 x 3.53
90.0	74.5	6.3	PT0300900	72.39 x 5.33
90.0	69.0	8.1	PT0400900	68 x 7.0
95.0	84.0	4.2	PT0200950	82.14 x 3.53
95.0	79.5	6.3	PT0300950	78.74 x 5.33
95.0	74.0	8.1	PT0400950	73 x 7.0
100.0	89.0	4.2	PT0201000	88.49 x 3.53
100.0	**84.5**	**6.3**	**PT0301000**	**81.92 x 5.33**
100.0	79.0	8.1	PT0401000	78 x 7.0
101.6	86.1	6.3	PT0301016	85.09 x 5.33
105.0	94.0	4.2	PT0201050	91.67 x 3.53
105.0	89.5	6.3	PT0301050	88.27 x 5.33
108.0	92.5	6.3	PT0301080	91.44 x 5.33
110.0	99.0	4.2	PT0201100	98.02 x 3.53
110.0	94.5	6.3	PT0301100	91.44 x 5.33
110.0	89.0	8.1	PT0401100	88 x 7.0
115.0	99.5	6.3	PT0301150	97.79 x 5.33
120.0	109.0	4.2	PT0201200	107.54 x 3.53
120.0	104.5	6.3	PT0301200	100.97 x 5.33
120.0	99.0	8.1	PT0401200	98 x 7.0
125.0	114.0	4.2	PT0201250	113.89 x 3.53
125.0	**109.5**	**6.3**	**PT0301250**	**107.32 x 5.33**
125.0	**104.0**	**8.1**	**PT0401250**	**103 x 7.0**

Bore Dia. D_N H9	Groove Dia. d1 h9	Groove Width L_1 +0.2	TSS Part No.	O-Ring Dimensions
127.0	111.5	6.3	PT0301270	110.49 x 5.33
130.0	114.5	6.3	PT0301300	113.67 x 5.33
130.0	109.0	8.1	PT0401300	108 x 7.0
132.0	121.0	4.2	PT0201320	120.24 x 3.53
135.0	114.0	8.1	PT0401350	113.67 x 7.0
140.0	124.5	6.3	PT0301400	123.19 x 5.33
140.0	119.0	8.1	PT0401400	116.84 x 7.0
145.0	129.5	6.3	PT0301450	126.37 x 5.33
145.0	124.0	8.1	PT0401450	123.19 x 7.0
150.0	134.5	6.3	PT0301500	132.72 x 5.33
150.0	129.0	8.1	PT0401500	126.37 x 7.0
155.0	134.0	8.1	PT0401550	132.72 x 7.0
160.0	**144.5**	**6.3**	**PT0301600**	**142.24 x 5.33**
160.0	**139.0**	**8.1**	**PT0401600**	**135.89 x 7.0**
165.0	144.0	8.1	PT0401650	142.24 x 7.0
170.0	149.0	8.1	PT0401700	145.42 x 7.0
175.0	154.0	8.1	PT0401750	151.77 x 7.0
180.0	164.5	6.3	PT0301800	164.47 x 5.33
180.0	159.0	8.1	PT0401800	158.12 x 7.0
190.0	169.0	8.1	PT0401900	164.47 x 7.0
194.0	178.5	6.3	PT0301940	177.17 x 5.33
200.0	**184.5**	**6.3**	**PT0302000**	**183.52 x 5.33**
200.0	**179.0**	**8.1**	**PT0402000**	**177.17 x 7.0**
205.0	184.0	8.1	PT0402050	183.52 x 7.0
210.0	189.0	8.1	PT0402100	183.52 x 7.0
215.0	194.0	8.1	PT0402150	189.87 x 7.0
220.0	199.0	8.1	PT0402200	196.22 x 7.0
230.0	214.5	6.3	PT0302300	208.92 x 5.33
230.0	209.0	8.1	PT0402300	208.92 x 7.0
240.0	219.0	8.1	PT0402400	215.27 x 7.0
250.0	**229.0**	**8.1**	**PT0402500**	**227.97 x 7.0**
250.0	**225.5**	**8.1**	**PT0802500**	**215.27 x 7.0**
250.0	134.5	6.3	PT0302500	234.32 x 5.33
254.0	233.0	8.1	PT0402540	227.97 x 7.0
260.0	239.0	8.1	PT0402600	240.67 x 7.0
265.0	244.0	8.1	PT0402650	240.67 x 7.0

Bore Dia.	Groove Dia.	Groove Width	TSS Part No.	O-Ring Dimensions
D_N H9	**d1** h9	L_1 +0.2		
268.0	247.0	8.1	PT0402680	240.67 x 7.0
270.0	249.0	8.1	PT0402700	240.67 x 7.0
280.0	259.0	8.1	PT0402800	253.37 x 7.0
290.0	269.0	8.1	PT0402900	266.07 x 7.0
300.0	279.0	8.1	PT0403000	278.77 x 7.0
300.0	275.5	8.1	PT0803000	266.07 x 7.0
304.8	283.8	8.1	PT0403048	278.77 x 7.0
310.0	289.0	8.1	PT0403100	278.77 x 7.0
320.0	**299.0**	**8.1**	**PT0403200**	**291.47 x 7.0**
320.0	**295.5**	**8.1**	**PT0803200**	**291.47 x 7.0**
330.0	305.5	8.1	PT0803300	304.17 x 7.0
340.0	315.5	8.1	PT0803400	316.87 x 7.0
350.0	325.5	8.1	PT0803500	316.87 x 7.0
360.0	335.5	8.1	PT0803600	329.57 x 7.0
370.0	345.5	8.1	PT0803700	342.27 x 7.0
380.0	355.5	8.1	PT0803800	354.97 x 7.0
400.0	**375.5**	**8.1**	**PT0804000**	**367.67 x 7.0**
420.0	395.5	8.1	PT0804200	393.07 x 7.0
430.0	405.5	8.1	PT0804300	405.26 x 7.0
440.0	415.5	8.1	PT0804400	405.26 x 7.0
450.0	425.5	8.1	PT0804500	417.96 x 7.0
460.0	435.5	8.1	PT0804600	430.66 x 7.0
480.0	455.5	8.1	PT0804800	456.06 x 7.0
500.0	**475.5**	**8.1**	**PT0805000**	**468.76 x 7.0**
555.0	530.5	8.1	PT0805550	506.86 x 7.0
600.0	575.5	8.1	PT0806000	557.66 x 7.0
640.0	615.5	8.1	PT0806400	608.08 x 7.0
660.0	635.5	8.1	PT0806600	633.48 x 7.0
700.0	672.0	9.5	PT0507000	670 x 8.4
710.0	682.0	9.5	PT0507100	680 x 8.4
740.0	712.0	9.5	PT0507400	710 x 8.4
780.0	752.0	9.5	PT0507800	750 x 8.4
800.0	772.0	9.5	PT0508000	770 x 8.4
900.0	872.0	9.5	PT0509000	870 x 8.4
1000.0	972.0	9.5	PT05X1000	970 x 8.4
1000.0	962.0	13.8	PT06X1000	960 x 12.0

Bore Dia.	Groove Dia.	Groove Width	TSS Part No.	O-Ring Dimensions
D_N H9	**d1** h9	L_1 +0.2		
1050.0	1022.0	9.5	PT05X1050	1020 x 8.4
1065.0	1027.0	13.8	PT06X1065	1025 x 12.0
1070.0	1032.0	13.8	PT06X1070	1030 x 12.0
1200.0	1172.0	9.5	PT05X1200	1170 x 8.4
1200.0	1162.0	13.8	PT06X1200	1160 x 12.0
1225.0	1187.0	13.8	PT06X1225	1185 x 12.0
1500.0	1462.0	13.8	PT06X1500	1460 x 12.0
2000.0	1962.0	13.8	PT06X2000	1960 x 12.0
2700.0	2662.0	13.8	PT06X2700	2660 x 12.0

All dimensions in **bold** type are suitable for installation in grooves to ISO 7425/1, bore dia. in accordance with ISO 3320. Other dimensions and all intermediate sizes up to 2700 mm dia. including inch sizes can be supplied.

All O-Rings with 12 mm cross section are delivered as special profilring.

Zurcon® Glyd Ring® P

Double Acting

Rubber Energized Plastic Faced Seal

Step Cut Sealing Element

Material:
Zurcon® Polyamid + NBR

■ Zurcon® Glyd Ring® P

Description

The doubleacting Zurcon® Glyd Ring® P is a combination of a Zurcon® based material slipper seal with a step cut and an energising rectangular elastomeric ring. It is produced with an interference fit at closed step cut which together with the squeeze of the rectangular energiser ring ensures a good sealing effect even at low pressure.

At higher system pressures, the rectangular ring is energised by the fluid, pushing the Zurcon® Glyd Ring® P against the sealing face with increased force. At high peak pressures, the Zurcon® step cut seal ring can follow ballooning of the tube without loosing the sealability.

Due to the Zurcon® high strength plastic material, two times bigger extrusion gaps are possible compared with Turcon® materials. The step cut in the ring is necessary for installation in closed grooves and for the flexibility of the seal ring due to the high stiffness of the material.

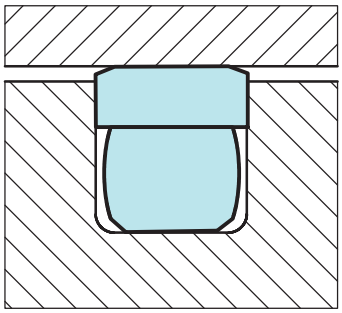

Figure 18 Zurcon® Glyd Ring® P

Step Cut

For easy installation on the piston and for the flexibility of the seal ring a precision step cut is produced by special tool technology.

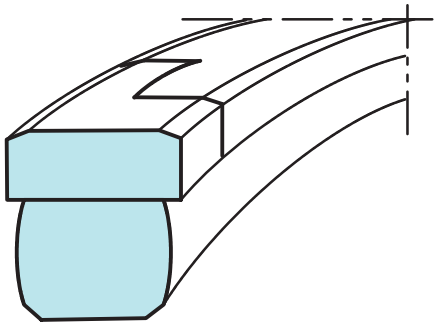

Figure 19 Step cut on Zurcon® Glyd Ring® P

Advantages

- Easy installation on piston without special tools
- Due to large extrusion gap, safe use even with soiled media
- Installation grooves acc. to ISO 7425/1
- Simple groove design, one piece piston possible
- Increased clearance compare to Turcon® Glyd Ring® seals
- (Approx. +50%), depending on operation conditions
- Resistent against shock loads
- High wear resistant material ensures long service life

Application Examples

- Construction machinery, e.g. excavators
- Truck cranes
- Fork lifts

It is particularly recommended for heavy duty applications.

Technical Data

Operating conditions:

Zurcon® Glyd Ring® P is recommended for reciprocating (with a length of stroke at least twice the groove width) movements where the dimensional gap between piston and tube shall be as big as possible or where high pressure peaks occure during operation.

Pressure:	50 MPa standard 100 MPa pressure peak
Speed:	up to 1 m/s
Temperature:	-30 °C to +110 °C standard -40 °C to +100 °C and -15 °C to +140 °C on request with special materials
Media:	mineral oil based hydraulic fluids

Important Note:
The above data are maximum values and cannot be used at the same time. e.g. the maximum operating speed depends on material type, pressure, temperature and gap value.

Materials

Standard Application:

- For hydraulic components in mineral oils or medias with good lubricating performance.

Zurcon® seal ring:	Zurcon® Z66
Energiser:	Rectangular ring in NBR 70 shore A, code N
Set reference:	Z66 N

Low temperature application:

Zurcon® seal ring:	Zurcon® Z66
Energiser:	Rectangular ring in low temp. NBR 70 shore A, code T
Set reference:	Z66 T

High temperature application:

Zurcon® seal ring:	Zurcon® Z66
Energiser:	Rectangular ring in FKM 70 shore A, code V
Set reference:	Z66 V

■ Installation Recommendation

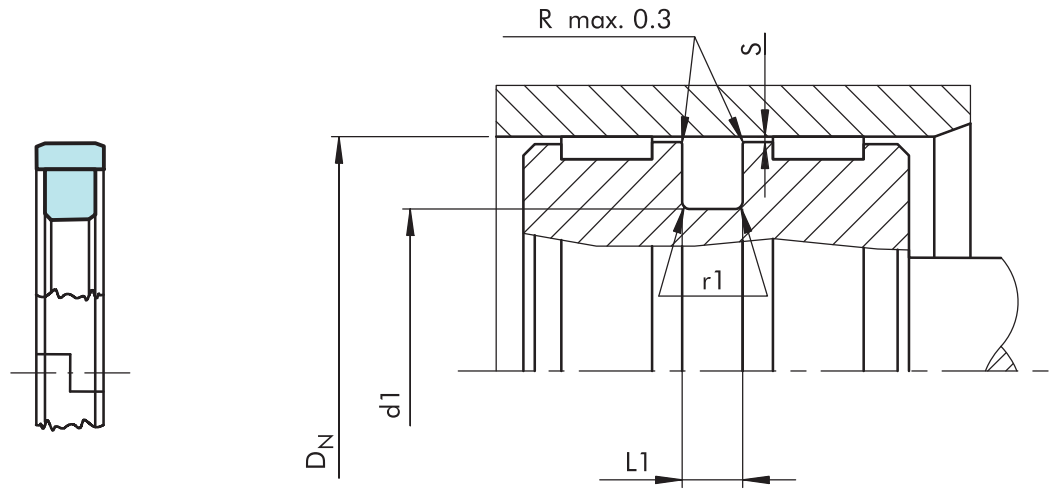

Figure 20 Installation drawing

Table XVI Installation dimensions

Series No.	Groove Diameter	Groove Width	Radius	Radial Clearance
	d_1 h9	L_1 +/-0.1	r_1	$S_{max.}$
PGP2	D_N - 11.0	4.2	0.5	0.35
PGP3	D_N - 15.5	6.3	0.9	0.50
PGP4	D_N - 21.0	8.1	0.9	0.60

Ordering example

Zurcon® Glyd Ring® P for ISO groove
Cylinder bore diameter: D_N = 125 mm
Series No. PGP4
Part No. PGP401250 (from Table XVII)
TSS seal ring
material code Z66
Energiser material code: N
Set code: Z66 N

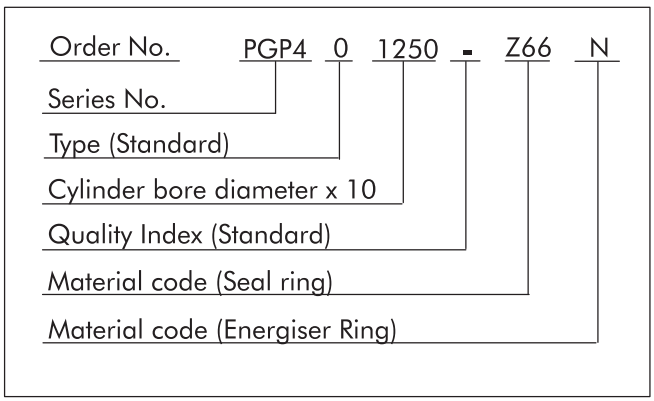

Table XVII Preferred Series / TSS Part No.

Bore Diameter	Groove Diameter	Groove Width	TSS Part No.
D_N H9	**d1** h9	**L1** +/-0.1	
45.0	34.0	4.2	PGP200450-Z66N
60.0	49.0	4.2	PGP200600-Z66N
70.0	54.5	6.3	PGP300700-Z66N
75.0	54.0	8.1	PGP400750-Z66N
80.0	59.0	8.1	PGP400800-Z66N
90.0	74.5	6.3	PGP300900-Z66N
90.0	69.0	8.1	PGP400900-Z66N
100.0	**84.5**	**6.3**	**PGP301000-Z66N**
100.0	79.0	8.1	PGP401000-Z66N
110.0	94.5	6.3	PGP301100-Z66N
110.0	89.0	8.1	PGP401100-Z66N
120.0	99.0	8.1	PGP401200-Z66N
125.0	**109.5**	**6.3**	**PGP301250-Z66N**
125.0	**104.0**	**8.1**	**PGP401250-Z66N**
130.0	109.0	8.1	PGP401300-Z66N
140.0	119.0	8.1	PGP401400-Z66N
150.0	129.0	8.1	PGP401500-Z66N
160.0	**139.0**	**8.1**	**PGP401600-Z66N**
170.0	149.0	8.1	PGP401700-Z66N
180.0	159.0	8.1	PGP401800-Z66N
190.0	169.0	8.1	PGP401900-Z66N

All dimensions in **bold** are suitable for installation in grooves to ISO 7425/1, bore dia. in accordance with ISO 3320
Further sizes on request

Turcon® AQ-Seal® 5

Double Acting

Rubber Energized Plastic Faced Seal

Material:
Turcon®, Zurcon® and Elastomer

■ Turcon® AQ-Seal® 5*

Description

The Turcon® AQ-Seal® 5 is a patented development of the proven standard Turcon® AQ-Seal®.

The seal profile of the Turcon® ring has been redesigned on both the dynamic and static sealing surface. Two O-Rings are used to energize the seal instead of one.

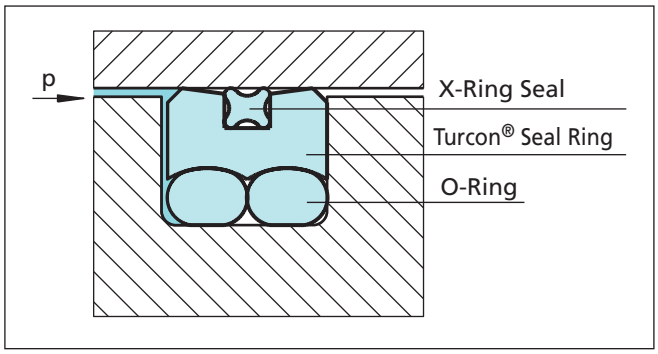

Figure 21 Turcon® AQ-Seal® 5

The AQ-Seal® 5 combines the benefits of a low-friction Turcon® slipper seal with the high sealing characteristics of an elastomeric seal by incorporating a limited foot print X-Ring Seal in the dynamic sealing face. This optimizes leakage control while minimizing friction.

The particular characteristics of the AQ-Seal® 5 are the special seal profile with a defined seal edge and the use of two O-Rings as energizing elements to optimize the pressure profile and to reduce the force of attack at gas permeability.

* Patent No. EP 0 424 372

Advantages

- High sealing effect in applications requiring media separation, e.g. fluid/fluid or fluid/gas
- Double security through the combination of low-friction special materials with elastomer seals
- Low gas permeation rate
- Higher pressure application, higher sliding speed compared to the AQ-Seal®
- Outstanding sliding properties, no stick-slip effect.

Application Examples

The Turcon® AQ-Seal® 5 mainly designed for heavy duty and large diameter applications and is recommended as double acting piston seal for hydraulic equipment such as:

- Machine tools
- Presses
- Rolling mills
- Mobile cranes
- Off-road hydro-pneumatic suspensions
- Servo hydraulics
- Offshore equipment
- Jacks

For Semi-static Piston Accumulators see page 51 Turcon® AQ-Seal® and for High Performance Piston Accumulators a further development is available i.e. Special Turcon® AQ Seal, see page189.

Technical Data

Operating conditions

Pressure:	Up to 60 MPa with mineral oil Up to 25 MPa for media with reduced lubricating properties
Speed:	Up to 3 m/s with reciprocating movements frequency up to 3 Hz
Temperature:	-30 °C to +200 °C *) (depending on O-Ring and X-Ring Seal material) (For applications at temperatures below -30 °C, please contact your local TSS Company).
Media:	Mineral oil-based hydraulic fluids, flame retardant hydraulic fluids, environmentally safe hydraulic fluids (bio-oils), phosphate ester, water and others, depending on the seal and O-Ring and X-Ring Seal material compatibility (see Table XVIII)
Clearance:	The maximum permissible radial clearance S_{max} is shown in Table XIX, as a function of the operating pressure and functional diameter.

Important Note:
The above data are maximum values and cannot be used at the same time. e.g. the maximum operating speed depends on material type, pressure, temperature and gap value. Temperature range also dependent on medium.

*) in the case of unpressurized applications in temperatures below 0°C please contact our application engineers for assistance!

Materials

The following material combinations have proven effective for hydraulic applications:

For light to heavy applications with reciprocating movements in mineral oils and other media with good lubrication:

All round material for hydraulic applications with reciprocating, short stroke or helical movements in mineral oils, flame retardant hydraulic fluids HFC, phosphate ester, bio-oils or fluids having less satisfactory lubricating properties:

Turcon® AQ-Seal® 5:	Turcon® M12	
O-Ring and X-Ring:	NBR, 70 Shore A	N
	FKM, 70 Shore A	V
Set code:	M12N or M12V	

For medium to heavy applications with reciprocating movements in mineral oils and other media with good lubrication:

Turcon® AQ-Seal® 5:	Turcon® T46	
O-Ring and X-Ring:	NBR, 70 Shore A	N
	FKM, 70 Shore A	V
Set code:	T46N or T46V	

For specific applications, all Turcon® materials are available. Other viable material combinations are listed in Table XVIII.

Table XVIII Turcon® Materials for AQ-Seal® 5

Material, Applications, Properties	Code	O-Ring Material Shore A	Code	O-Ring Operating Temp.* °C	Mating Surface Material	MPa max Dynamic
Turcon® M12 **First material choice** for seals in linear motion Overall improved properties For new constructions and updating For all commonly applied hydraulic fluids including fluids with low lubrication performance Lowest friction and best sliding properties Lowest wear on seals Improved absorption of abrasive contaminants No wear or abrasion of counter surface Mineral fibre and Additives filled Colour: Dark grey	M12	NBR - 70	N	-30 to +100	Steel Steel hardened Steel chrome plated (rod) Steel plated (rod) Cast iron Stainless steel Titanium	50
		NBR - 70 Low temp.	T	-45 to +80		
		FKM - 70	V	-10 to +200		
Turcon® T08 For lubricating fluids and linear motion **Very high compressive strength and extrusion resistance** Hard counter surfaces is recommended Bronze filled Colour: Light to dark brown, which may have variations in shading	T08	NBR - 70	N	-30 to +100	Steel hardened Steel chrome plated (rod) Cast iron	60
		NBR - 70 Low temp.	T	-45 to +80		
		FKM - 70	V	-10 to +200		
Turcon® T10 For hydraulic and pneumatic For linear motion in lubricating and non-lubricating fluids High extrusion resistance Good chemical resistance Not for electrically conducting fluids Carbon, graphite filled Colour: Black	T10	NBR - 70	N	-30 to +100	Steel Steel chrome plated (rod) Stainless steel	40
		NBR - 70 Low temp.	T	-45 to +80		
		FKM - 70	V	-10 to +200		
		EPDM-70	E**	-45 to +145		
Turcon® T29 For lubricating and non-lubricating fluids Good extrusion resistance Surface texture is not suitable for gas sealing Not for electrically conducting fluids Carbon fibre filled Colour: Grey	T29	NBR - 70	N	-30 to +100	Steel Steel chrome plated (rod) Cast iron Stainless steel	30
		NBR - 70 Low temp.	T	-45 to +80		
		FKM - 70	V	-10 to +200		
		EPDM-70	E**	-45 to +145		
Turcon® T40 For lubricating and non-lubricating fluids High frequency and short strokes **Water hydraulics** Surface texture is not suitable for gas sealing Carbon fibre filled Colour: Grey	T40	NBR - 70	N	-30 to +100	Steel Steel chrome plated (rod) Cast iron Stainless steel Aluminium	25
		NBR - 70 Low temp.	T	-45 to +80		
		FKM - 70	V	-10 to +200		
		EPDM-70	E**	-45 to +145		
Turcon® T46 For lubricated hydraulics in linear motion High compressive strength High extrusion resistance Very good sliding and wear properties Bronze filled Colour: Light to dark brown, which may have variations in shading	T46	NBR - 70	N	-30 to +100	Steel hardened Steel chrome plated (rod) Cast iron	50
		NBR - 70 Low temp.	T	-45 to +80		
		FKM - 70	V	-10 to +200		

Material, Applications, Properties	Code	O-Ring Material Shore A	Code	O-Ring Operating Temp.* °C	Mating Surface Material	MPa max Dyna-mic
Zurcon® Z80 For lubricating and non-lubricating fluids Water based fluids, air and gases Dry air pneumatics High abrasion and extrusion resistance For service in abrasive conditions and media with particles Good chemical resistance Limited temperature capability (-60 to +80 °C) UHMWPE (Ultra High Molecular Weight Polyethylene) Colour: White to off-white	Z80	NBR - 70	N	-30 to (+100)	Steel Steel hardened Steel chrome plated (rod) Stainless steel Aluminium Ceramic coating	35
		NBR - 70 Low temp.	T	-45 to +80		
		EDPM - 70	E**	-10 to (+145)		

* The O-Ring Operation Temperature is only valid in mineral hydraulic oil (except EPDM). ** Material not suitable for mineral oils.
BAM: Tested by "Bundesanstalt Materialprüfung, Germany". Highlighted materials are standard.

■ Installation Recommendation

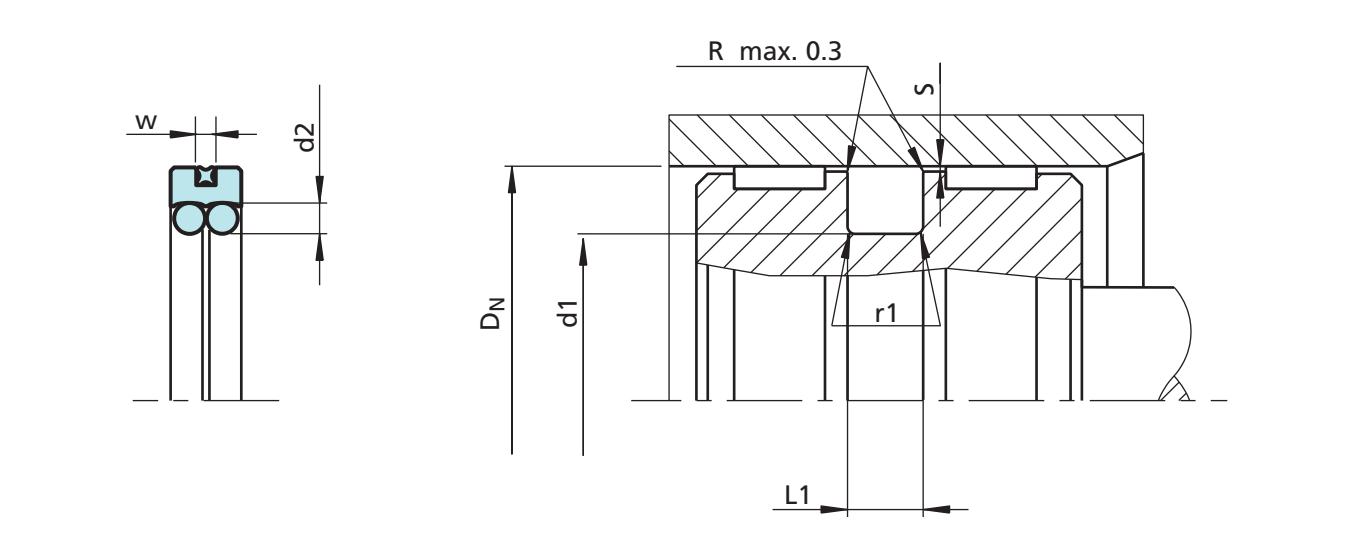

Figure 22 Installation drawing

Table XIX Installation dimensions

Series No.	Bore Diameter D_N H9		Groove Diameter	Groove Width	Radius	Radial Clearance S max.*			O-Ring Cross-Sec.	X-Ring Seal Cross Sec.
	Recommended Range	Extended Range	d_1 h9	L_1 +0.2	r_1	10 MPa	20 MPa	30 MPa	d_2	W
PQ01	40 - 79.9	25 - 140	D_N - 10.0	6.3	0.6	0.30	0.20	0.15	2.62	1.78
PQ02	80 - 132.9	50 - 250	D_N - 13.0	8.3	1.0	0.40	0.30	0.15	3.53	2.62
PQ03	133 - 462.9	100 - 480	D_N - 18.0	12.3	1.3	0.40	0.30	0.20	5.33	3.53
PQ04	463 - 700.0	425 - 700	D_N - 31.0	16.3	1.8	0.50	0.40	0.30	7.00	5.33

* At pressures **> 30 MPa** use diameter tolerance H8/f8 (bore/piston) in area of the seal or consult TSS for alternative material or profiles. TSS Slydring® / Wear Rings are not applicable at very small radical clearance S. Please consult the Slydring® catalog.

Ordering example

Turcon®AQ-Seal®5, complete with O-Ring and X-ring seal, recommended range, Series PQ02 (from Table XIX).
Bore diameter: D_N = 80.0 mm
TSS Part No. PQ0200800 (from Table XX)

Select the material from Table XVIII. The corresponding code numbers are appended to the TSS Part No. (from Table XX). Together they form the TSS Article No.
For all intermediate sizes not shown in Table XX, the TSS Article No. can be determined from the example opposite.

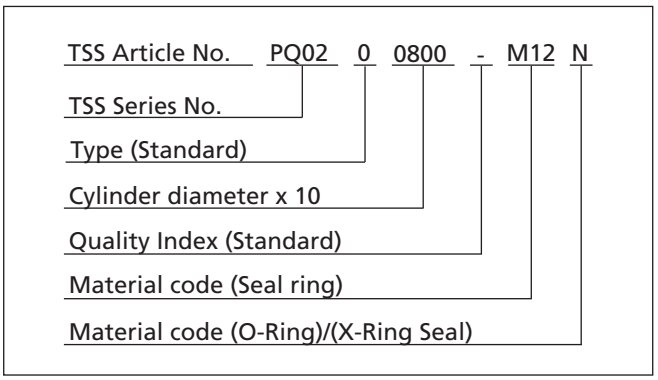

Table XX Installation dimensions / TSS Part No.

Bore Diameter	Groove Diameter	Groove Width	TSS Part No.	O-Ring Dimensions	X-Ring Dimensions
D_N H9	d_1 h9	L_1 +0.2			
40.0	**30.0**	**6.3**	**PQ0100400**	**29.82 x 2.62**	**34.65 x 1.78**
42.0	32.0	6.3	PQ0100420	31.42 x 2.62	37.82 x 1.78
45.0	35.0	6.3	PQ0100450	34.59 x 2.62	37.82 x 1.78
48.0	38.0	6.3	PQ0100480	37.77 x 2.62	41.00 x 1.78
50.0	**40.0**	**6.3**	**PQ0100500**	**39.34 x 2.62**	**44.17 x 1.78**
52.0	42.0	6.3	PQ0100520	40.94 x 2.62	47.35 x 1.78
55.0	45.0	6.3	PQ0100550	44.12 x 2.62	50.52 x 1.78
60.0	50.0	6.3	PQ0100600	48.90 x 2.62	53.70 x 1.78
63.0	**53.0**	**6.3**	**PQ0100630**	**52.07 x 2.62**	**56.87 x 1.78**
65.0	55.0	6.3	PQ0100650	53.64 x 2.62	60.05 x 1.78
70.0	60.0	6.3	PQ0100700	58.42 x 2.62	63.22 x 1.78
75.0	65.0	6.3	PQ0100750	63.17 x 2.62	69.57 x 1.78
80.0	**67.0**	**8.3**	**PQ0200800**	**66.27 x 3.53**	**71.12 x 2.62**
85.0	72.0	8.3	PQ0200850	69.44 x 3.53	75.87 x 2.62
90.0	77.0	8.3	PQ0200900	75.79 x 3.53	82.22 x 2.62
95.0	82.0	8.3	PQ0200950	78.97 x 3.53	82.22 x 2.62
100.0	**87.0**	**8.3**	**PQ0201000**	**85.32 x 3.53**	**88.57 x 2.62**
105.0	92.0	8.3	PQ0201050	91.67 x 3.53	94.92 x 2.62
110.0	97.0	8.3	PQ0201100	94.84 x 3.53	101.27 x 2.62
115.0	102.0	8.3	PQ0201150	101.19 x 3.53	107.62 x 2.62
120.0	107.0	8.3	PQ0201200	104.37 x 3.53	107.62 x 2.62
125.0	**112.0**	**8.3**	**PQ0201250**	**110.72 x 3.53**	**113.97 x 2.62**
130.0	117.0	8.3	PQ0201300	113.89 x 3.53	120.32 x 2.62
135.0	117.0	12.3	PQ0301350	113.67 x 5.33	123.42 x 3.53
140.0	122.0	12.3	PQ0301400	120.02 x 5.33	126.60 x 3.53
150.0	132.0	12.3	PQ0301500	129.54 x 5.33	136.12 x 3.53
160.0	**142.0**	**12.3**	**PQ0301600**	**139.07 x 5.33**	**145.65 x 3.53**
170.0	152.0	12.3	PQ0301700	148.49 x 5.33	158.35 x 3.53
180.0	162.0	12.3	PQ0301800	158.12 x 5.33	164.70 x 3.53
190.0	172.0	12.3	PQ0301900	170.82 x 5.33	177.40 x 3.53
200.0	**182.0**	**12.3**	**PQ0302000**	**177.17 x 5.33**	**183.75 x 3.53**
210.0	192.0	12.3	PQ0302100	189.87 x 5.33	196.45 x 3.53
220.0	202.0	12.3	PQ0302200	196.22 x 5.33	202.80 x 3.53
230.0	212.0	12.3	PQ0302300	208.92 x 5.33	215.50 x 3.53
240.0	222.0	12.3	PQ0302400	221.62 x 5.33	221.85 x 3.53
250.0	**232.0**	**12.3**	**PQ0302500**	**227.97 x 5.33**	**234.55 x 3.53**

Bore diameters in **bold** type comply with the recommendations of ISO 3320.
All intermediate sizes up to 700 mm diameter can be supplied. Sizes > 700 mm diameter with special elastomers on request.

Bore Diameter	Groove Diameter	Groove Width	TSS Part No.	O-Ring Dimensions	X-Ring Dimensions
D_N H9	d_1 h9	L_1 +0.2			
280.0	262.0	12.3	PQ0302800	253.37 x 5.33	266.29 x 3.53
300.0	282.0	12.3	PQ0303000	278.77 x 5.33	278.99 x 3.53
320.0	**302.0**	**12.3**	**PQ0303200**	**291.47 x 5.33**	**304.39 x 3.53**
350.0	332.0	12.3	PQ0303500	329.57 x 5.33	329.79 x 3.53
400.0	**382.0**	**12.3**	**PQ0304000**	**380.37 x 5.33**	**380.59 x 3.53**
420.0	402.0	12.3	PQ0304200	405.26 x 5.33	380.59 x 3.53
450.0	432.0	12.3	PQ0304500	430.66 x 5.33	430.66 x 3.53
480.0	449.0	16.3	PQ0404800	443.36 x 7.0	456.06 x 5.33
500.0	**469.0**	**16.3**	**PQ0405000**	**468.76 x 7.0**	**456.06 x 5.33**
600.0	569.0	16.3	PQ0406000	557.66 x 7.0	557.58 x 5.33
700.0	669.0	16.3	PQ0407000	658.88 x 7.0	658.88 x 5.33

Bore diameters in **bold** type comply with the recommendations of ISO 3320.
All intermediate sizes up to 700 mm diameter can be supplied. Sizes > 700 mm diameter with special elastomers on request.

Turcon® AQ-Seal®

Double Acting

Rubber Energized Plastic Faced Seal

Material:
Turcon®, Zurcon® and Elastomer

■ Turcon® AQ-Seal®

Description

The Turcon® AQ-Seal® is a double-acting seal consisting of a seal ring of high-grade modified Turcon® material, a X-Ring Seal and an O-Ring as energizing element.

The Turcon® seal ring and the X-Ring Seal together assume the dynamic sealing function whilst the O-Ring performs the static sealing function.

Design

The AQ-Seal® is supplied as standard with radial notches on both sides. These ensure direct pressurizing of the seal under all operating conditions.

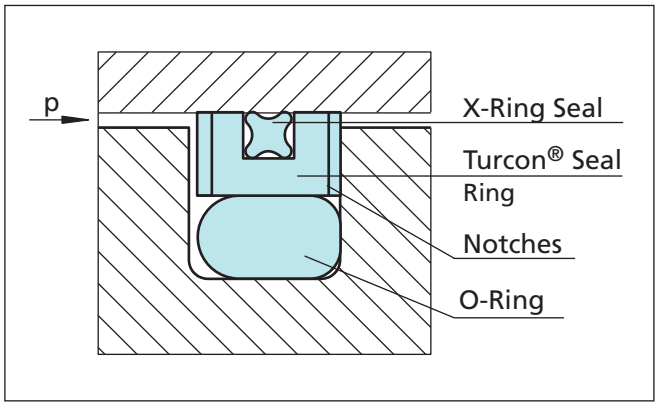

Figure 23 Turcon® AQ-Seal®

Advantages

- High sealing effect in applications requiring media separation, e.g. fluid/fluid or fluid/gas
- Double security through the combination of low-friction special materials with elastomer seals
- Simple groove design, small installation space, interchangeable with Turcon® Glyd Ring®, Turcon® Glyd Ring® T and Turcon® Stepseal®K installation according to ISO 7425/1
- Outstanding sliding properties, no stick-slip effect.

Application Examples

The Turcon® AQ-Seal® is the recommended sealing element for double acting pistons of positioning and holding cylinders for:

- Machine tools
- Presses
- Semi-static piston accumulators
- Active stabilizers
- Hydro-pneumatic suspensions for heavy vehicles
- Subsea connectors
- Offshore valves
- Wind Power
- Pressure intensifiers
- Jacks
- Lifts
- Hydraulic vices

For high performance Piston Accumulators a further development is available i.e. Special Turcon® AQ-Seal®, see page 189.

Technical Data

Operating conditions:

Pressure:	Up to 50 MPa with mineral oil Up to 30 MPa for media with reduced lubricating properties
Speed:	Up to 2 m/s with reciprocating movements
Temperature:	-45 °C to +200 °C *) (depending on O-Ring and X-Ring Seal material) (For applications at temperatures below -30 °C, please contact your local TSS Company).
Media:	Mineral oil-based hydraulic fluids, flame retardant hydraulic fluids, environmentally safe hydraulic fluids (bio-oils), phosphate ester, water and others, depending on the seal, O-Ring and X-Ring Seal material compatibility (see Table XXI) For piston accumulators in flame retardant fluids (HFA, HFC), media with reduced lubricating properties and gases a Special Turcon® AQ-Seal® version is available**)
Clearance:	The maximum permissible radial clearance Smax is shown in Table XXII, as a function of the operating pressure and functional diameter.

Important Note:
The above data are maximum values and cannot be used at the same time. e.g. the maximum operating speed depends on material type, pressure, temperature and gap value. Temperature range also dependent on medium.

*) In the case of unpressurized applications in temperatures below 0°C please contact our application engineers for assistance!

**) Please see page 189 and contact your local Trelleborg Sealing Solutions Company.

Materials

The following material combinations have proven effective for hydraulic applications:

All round material for hydraulic applications with reciprocating, short stroke or helical movements in mineral oils, flame retardant hydraulic fluids HFC, phosphate ester, bio-oils or fluids having less satisfactory lubricating properties:

Turcon® AQ-Seal®:	Turcon® M12	
O-Ring and X-Ring:	NBR, 70 Shore A FKM, 70 Shore A	N V
Set code:	M12N or M12V	

For medium to heavy applications with reciprocating movements in mineral oils and other media with good lubrication:

Turcon® AQ-Seal®:	Turcon® T46	
O-Ring and X-Ring:	NBR, 70 Shore A FKM, 70 Shore A	N V
Set code:	T46N or T46V	

For specific applications, all Turcon® materials are available. Other viable material combinations are listed in Table XXI.

Table XXI Turcon® material for AQ-Seal®

Material, Applications, Properties	Code	O-Ring Material Shore A	Code	O-Ring Operating Temp.* °C	Mating Surface Material	MPa max Dynamic
Turcon® M12 **First material choice** for seals in linear motion Overall improved properties For new constructions and updating For all commonly applied hydraulic fluids including fluids with low lubrication performance Lowest friction and best sliding properties Lowest wear on seals Improved absorption of abrasive contaminants No wear or abrasion of counter surface Mineral fibre and Additives filled Colour: Dark grey	M12	NBR - 70	N	-30 to +100	Steel Steel hardened Steel chrome plated (rod) Steel plated (rod) Cast iron Stainless steel Titanium	40
		NBR - 70 Low temp.	T	-45 to +80		
		FKM - 70	V	-10 to +200		
Turcon® T08 For lubricating fluids and linear motion **Very high compressive strength and extrusion resistance** Hard counter surfaces is recommended Bronze filled Colour: Light to dark brown, which may have variations in shading	T08	NBR - 70	N	-30 to +100	Steel hardened Steel chrome plated (rod) Cast iron	50
		NBR - 70 Low temp.	T	-45 to +80		
		FKM - 70	V	-10 to +200		
Turcon® T10 For hydraulic and pneumatic For linear motion in lubricating and non-lubricating fluids High extrusion resistance Good chemical resistance Not for electrically conducting fluids Carbon, graphite filled Colour: Black	T10	NBR - 70	N	-30 to +100	Steel Steel chrome plated (rod) Stainless steel	30
		NBR - 70 Low temp.	T	-45 to +80		
		FKM - 70	V	-10 to +200		
		EPDM-70	E**	-45 to +145		
Turcon® T29 For lubricating and non-lubricating fluids Good extrusion resistance Surface texture is not suitable for gas sealing Not for electrically conducting fluids Carbon fibre filled Colour: Grey	T29	NBR - 70	N	-30 to +100	Steel Steel chrome plated (rod) Cast iron Stainless steel	30
		NBR - 70 Low temp.	T	-45 to +80		
		FKM - 70	V	-10 to +200		
		EPDM-70	E**	-45 to +145		
Turcon® T40 For lubricating and non-lubricating fluids High frequency and short strokes **Water hydraulics** Surface texture is not suitable for gas sealing Carbon fibre filled Colour: Grey	T40	NBR - 70	N	-30 to +100	Steel Steel chrome plated (rod) Cast iron Stainless steel Aluminium	25
		NBR - 70 Low temp.	T	-45 to +80		
		FKM - 70	V	-10 to +200		
		EPDM-70	E**	-45 to +145		
Turcon® T46 For lubricated hydraulics in linear motion High compressive strength High extrusion resistance Very good sliding and wear properties Bronze filled Colour: Light to dark brown, which may have variations in shading	T46	NBR - 70	N	-30 to +100	Steel hardened Steel chrome plated (rod) Cast iron	40
		NBR - 70 Low temp.	T	-45 to +80		
		FKM - 70	V	-10 to +200		

Material, Applications, Properties	Code	O-Ring Material Shore A	Code	O-Ring Operating Temp.* °C	Mating Surface Material	MPa max Dyna-mic
Zurcon® Z80 For lubricating and non-lubricating fluids Water based fluids, air and gases Dry air pneumatics High abrasion and extrusion resistance For service in abrasive conditions and media with particles Good chemical resistance Limited temperature capability (-60 to +80 °C) UHMWPE (Ultra High Molecular Weight Polyethylene) Colour: White to off-white	Z80	NBR - 70	N	-30 to (+100)	Steel Steel hardened Steel chrome plated (rod) Stainless steel Aluminium Ceramic coating	30
		NBR - 70 Low temp.	T	-45 to +80		
		EDPM - 70	E**	-45 to (+145)		

* The O-Ring Operation Temperature is only valid in mineral hydraulic oil (except EPDM). ** Material not suitable for mineral oils.
BAM: Tested by "Bundesanstalt Materialprüfung, Germany". Highlighted materials are standard.

■ Installation Recommendation

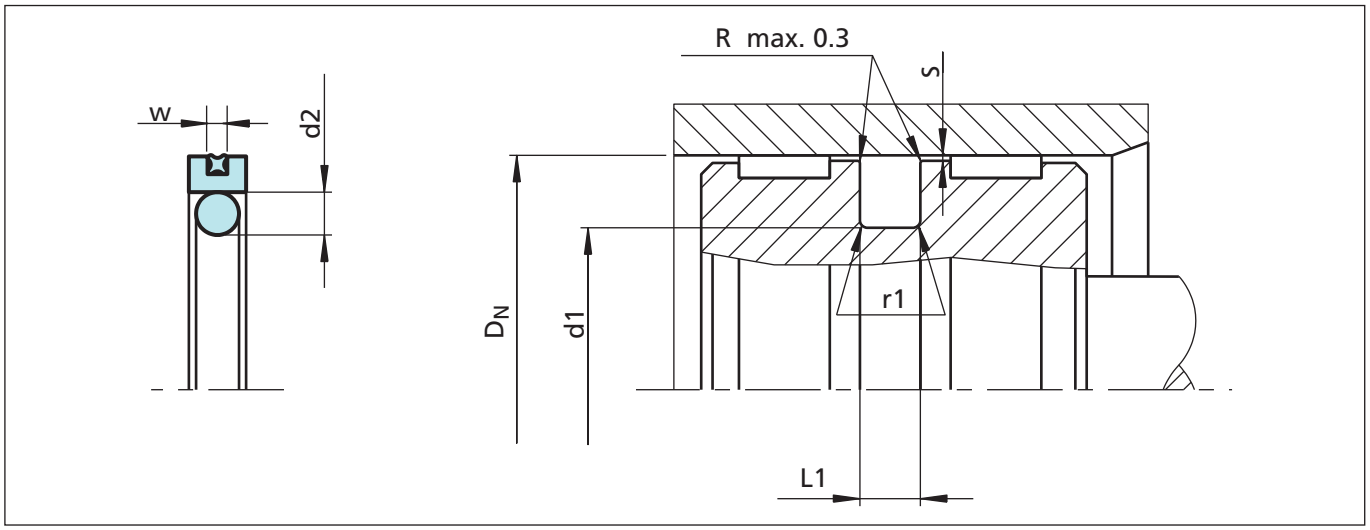

Figure 24 Installation drawing

Table XXII Installation dimensions

Bore Diameter D_N H9				Groove Dia.	Groove Width	Radius	Radial Clearance S max *			O-Ring Cross Section	X-Ring Seal Cross Section
Standard Application		Light Application									
Series No.	Diameter Range	Series No.	Diameter Range	d_1 h9	L_1 +0.2	r_1	10 MPa	20 MPa	40 MPa	d_2	W
PQ12	15 - 39.9	PQ14	40 - 79.9	D_N - 11.0	4.2	1.0	0.25	0.15	0.10	3.53	1.78
PQ12	40 - 79.9	PQ14	80 - 132.9	D_N - 15.5	6.3	1.3	0.30	0.20	0.15	5.33	1.78
PQ22	80 - 132.9	PQ24	133 - 252.9	D_N - 21.0	8.1	1.8	0.30	0.20	0.15	7.00	2.62
PQ22	133 - 252.9	PQ24	--	D_N - 24.5	8.1	1.8	0.30	0.20	0.15	7.00	2.62
PQ32	253 - 462.9	--	--	D_N - 28.0	9.5	2.5	0.45	0.30	0.25	8.40	3.53
PQ52	463 - 700.0	--	--	D_N - 35.0	11.5	3.0	0.55	0.40	0.35	10.00	5.33

* At pressures > 40 MPa use diameter tolerance H8/f8 (bore/piston) in area of the seal or use Turcon® AQ-Seal® 5 CR.
TSS Slydring® / Wear Rings are not applicable at very small radical clearance S. Please consult the Slydring® catalog.

Ordering example

Turcon® AQ-Seal®, complete with O-Ring and X-Ring Seal, recommended range, Series PQ22 (from Table XXII).
Bore diameter: D_N = 80.0 mm
TSS Part No. PQ2200800 (from Table XXIII)
Select the material from Table XXI. The corresponding code numbers are appended to the TSS Part No. (from Table XXIII). Together they form the TSS Article No.
For all intermediate sizes not shown in Table XXIII, the TSS Article No. can be determined from the example opposite.

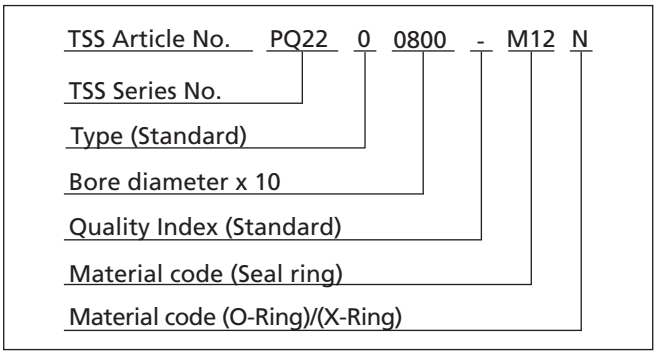

Table XXIII Installation dimensions / TSS Part No.

Bore Diameter	Groove Diameter	Groove Width	TSS Part No.	O-Ring Dimensions	X-Ring Dimensions
D_N H9	d_1 h9	L_1 +0.2			
16.0	5.0	4.2	PQ1200160	4.34 x 3.53	12.42 x 1.78
18.0	7.0	4.2	PQ1200180	6.42 x 3.53	14.00 x 1.78
20.0	9.0	4.2	PQ1200200	8.42 x 3.53	15.60 x 1.78
22.0	11.0	4.2	PQ1200220	10.69 x 3.53	17.17 x 1.78
25.0	**14.0**	**4.2**	**PQ1200250**	**13.87 x 3.53**	**20.35 x 1.78**
28.0	17.0	4.2	PQ1200280	15.47 x 3.53	23.52 x 1.78
30.0	19.0	4.2	PQ1200300	18.66 x 3.53	25.12 x 1.78
32.0	**21.0**	**4.2**	**PQ1200320**	**20.22 x 3.53**	**26.70 x 1.78**
35.0	24.0	4.2	PQ1200350	23.40 x 3.53	29.87 x 1.78
40.0	**29.0**	**4.2**	**PQ1400400**	**28.17 x 3.53**	**34.65 x 1.78**
42.0	31.0	4.2	PQ1400420	29.75 x 3.53	37.82 x 1.78
45.0	34.0	4.2	PQ1400450	32.92 x 3.53	37.82 x 1.78
48.0	37.0	4.2	PQ1400480	36.09 x 3.53	41.00 x 1.78
50.0	**39.0**	**4.2**	**PQ1400500**	**37.70 x 3.53**	**44.17 x 1.78**
50.0	**34.5**	**6.3**	**PQ1200500**	**32.69 x 5.33**	**44.17 x 1.78**
52.0	41.0	4.2	PQ1400520	40.87 x 3.53	47.35 x 1.78
55.0	44.0	4.2	PQ1400550	44.04 x 3.53	50.52 x 1.78
60.0	49.0	4.2	PQ1400600	47.22 x 3.53	53.70 x 1.78
63.0	**52.0**	**4.2**	**PQ1400630**	**50.39 x 3.53**	**56.87 x 1.78**
63.0	**47.5**	**6.3**	**PQ1200630**	**46.99 x 5.33**	**56.87 x 1.78**
65.0	54.0	4.2	PQ1400650	53.57 x 3.53	60.05 x 1.78
70.0	59.0	4.2	PQ1400700	56.74 x 3.53	63.22 x 1.78
70.0	54.5	6.3	PQ1200700	53.34 x 5.33	63.22 x 1.78
75.0	64.0	4.2	PQ1400750	63.09 x 3.53	69.57 x 1.78
80.0	**64.5**	**6.3**	**PQ1400800**	**62.87 x 5.33**	**72.75 x 1.78**
80.0	59.0	8.1	PQ2200800	58 x 7.0	71.12 x 2.62
85.0	69.5	6.3	PQ1400850	69.22 x 5.33	75.92 x 1.78
85.0	64.0	8.1	PQ2200850	63 x 7.0	75.87 x 2.62
90.0	74.5	6.3	PQ1400900	72.39 x 5.33	82.27 x 1.78
90.0	69.0	8.1	PQ2200900	68 x 7.0	82.22 x 2.62
95.0	79.5	6.3	PQ1400950	78.74 x 5.33	88.62 x 1.78
95.0	74.0	8.1	PQ2200950	73 x 7.0	82.22 x 2.62
100.0	**84.5**	**6.3**	**PQ1401000**	**81.92 x 5.33**	**88.62 x 1.78**
100.0	79.0	8.1	PQ2201000	78 x 7.0	88.57 x 2.62
105.0	89.5	6.3	PQ1401050	88.27 x 5.33	94.97 x 1.78
105.0	84.0	8.1	PQ2201050	83 x 7.0	94.92 x 2.62

The dimensions in **bold** type are suitable for grooves to ISO 7425/1. Bore diameter in accordance with ISO 3320.
All intermediate sizes up to 700 mm diameter can be supplied. Sizes > 700 mm diameter with special elastomers on request.

Bore Diameter	Groove Diameter	Groove Width	TSS Part No.	O-Ring Dimensions	X-Ring Dimensions
D_N H9	d_1 h9	L_1 +0.2			
110.0	94.5	6.3	PQ1401100	91.44 x 5.33	101.32 x 1.78
110.0	89.0	8.1	PQ2201100	88 x 7.0	101.27 x 2.62
115.0	99.5	6.3	PQ1401150	97.79 x 5.33	107.67 x 1.78
115.0	94.0	8.1	PQ2201150	93 x 7.0	107.62 x 2.62
120.0	104.5	6.3	PQ1401200	100.97 x 5.33	114.02 x 1.78
120.0	99.0	8.1	PQ2201200	98 x 7.0	107.62 x 2.62
125.0	**109.5**	**6.3**	**PQ1401250**	**107.32 x 5.33**	**114.02 x 1.78**
125.0	**104.0**	**8.1**	**PQ2201250**	**103 x 7.0**	**113.97 x 2.62**
130.0	114.5	6.3	PQ1401300	113.67 x 5.33	120.37 x 1.78
130.0	109.0	8.1	PQ2201300	108 x 7.0	120.32 x 2.62
135.0	114.0	8.1	PQ2401350	113.67 x 7.0	126.67 x 2.62
140.0	119.0	8.1	PQ2401400	116.84 x 7.0	126.67 x 2.62
150.0	129.0	8.1	PQ2401500	126.37 x 7.0	139.37 x 2.62
160.0	**139.0**	**8.1**	**PQ2401600**	**135.89 x 7.0**	**145.72 x 2.62**
170.0	149.0	8.1	PQ2401700	145.42 x 7.0	158.42 x 2.62
180.0	159.0	8.1	PQ2401800	158.12 x 7.0	171.11 x 2.62
190.0	169.0	8.1	PQ2401900	164.47 x 7.0	177.47 x 2.62
200.0	**179.0**	**8.1**	**PQ2402000**	**177.17 x 7.0**	**190.17 x 2.62**
210.0	189.0	8.1	PQ2402100	183.52 x 7.0	196.52 x 2.62
220.0	199.0	8.1	PQ2402200	196.22 x 7.0	202.87 x 2.62
230.0	209.0	8.1	PQ2402300	208.92 x 7.0	215.57 x 2.62
240.0	219.0	8.1	PQ2402400	215.27 x 7.0	221.92 x 2.62
250.0	229.0	8.1	PQ2402500	227.97 x 7.0	234.62 x 2.62
250.0	**225.5**	**8.1**	**PQ2202500**	**227.97 x 7.0**	**234.62 x 2.62**
280.0	252.0	9.5	PQ3202800	250 x 8.4	266.29 x 3.53
300.0	272.0	9.5	PQ3203000	270 x 8.4	278.99 x 3.53
310.0	282.0	9.5	PQ3203100	280 x 8.4	291.69 x 3.53
320.0	292.0	9.5	PQ3203200	290 x 8.4	304.39 x 3.53
350.0	322.0	9.5	PQ3203500	320 x 8.4	329.79 x 3.53
400.0	372.0	9.5	PQ3204000	370 x 8.4	380.59 x 3.53
420.0	392.0	9.5	PQ3204200	390 x 8.4	380.59 x 3.53
450.0	422.0	9.5	PQ3204500	420 x 8.4	430.66 x 3.53
480.0	445.0	11.5	PQ5204800	444 x 10.0	456.06 x 5.33
500.0	465.0	11.5	PQ5205000	464 x 10.0	456.06 x 5.33
600.0	565.0	11.5	PQ5206000	564 x 10.0	557.58 x 5.33
700.0	665.0	11.5	PQ5207000	664 x 10.0	658.88 x 5.33

The dimensions in **bold** type are suitable for grooves to ISO 7425/1. Bore diameter in accordance with ISO 3320.
All intermediate sizes up to 700 mm diameter can be supplied. Sizes > 700 mm diameter with special elastomers on request.

POLYPAC® - PHD Seal

Double Acting

Heavy Duty High Pressure

Material:
PTFE, NBR Elastomer, POM

■ PHD Seal

Description

The PHD Seal is a high-pressure heavy-duty piston seal with excellent leakage control and superior extrusion and wear resistance.

The PHD seal is a combination of a PTFE based slipper seal energised by an elastomer profile ring and completed with two Back-up rings (POM). It is manufactured with a predefined interference fit, which together with the squeeze of the elastomer part ensures a good sealing effect even at low system pressure. At higher pressures the elastomer part is energised by the system pressure and consequently activates the slipper seal in the radial direction.

The Back-up rings prevent the slipper seal from extrusion and ensure a long service life even under harsh conditions.

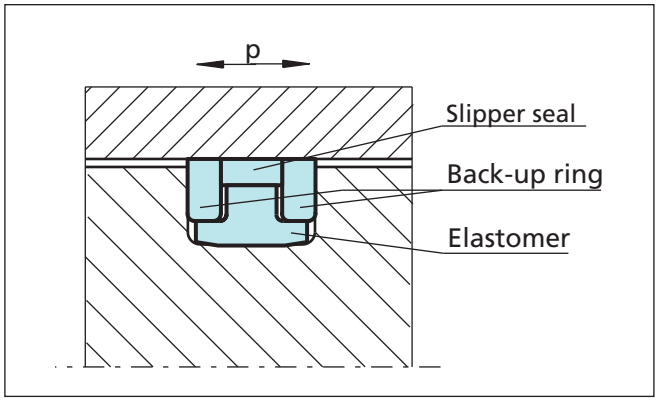

Figure 25 PHD Seal

Advantages

- Simple groove design
- No stick-slip effect when starting for smooth operation
- Minimum static and dynamic coefficient of friction
- Increased clearance possible
- Due to larger extrusion gap, safe use even with soiled media
- Long service life

Application Examples

The PHD Seal is the recommended sealing element for double acting pistons of hydraulic cylinders working in very harsh conditions such as:

- Excavators
- Heavy duty hydraulic cylinders

Technical Data

Operating conditions

Pressure:	Up to 40 MPa Peak pressure up to 60 MPa
Speed:	Up to 1.5 m/s
Temperature:	-45 °C to +135 °C
Media:	Mineral oil based hydraulic fluids, water/oil and glycol/oil emulsions
Clearance:	The maximum permissible radial clearance S_{max} is shown in Table XXV, as a function of the operating pressure and functional diameter.

Important Note:
The above data are maximum values and cannot be used at the same time. e.g. the maximum operating speed depends on material type, pressure, temperature and gap value.
Temperature range also dependent on medium.

Materials

Standard Application:

For hydraulic components:

- In mineral oils or medium with good lubricating performance
- in water /oil and water/glycol emulsions

Slipper Seal:	Bronze filled PTFE
Energiser:	NBR 80 Shore A
Back-up rings:	POM
Material code for the set:	PTNO4

Special Application:

- For special applications requiring other material combinations, please contact your local Trelleborg Sealing Solutions Company.

Table XXIV Standard PTFE Based Materials for PHD Piston Seal

Material, Applications, Properties	Code	Energiser Material	Code	Energiser Operating Temp.* °C	Mating Surface Material	MPa max.
Material TR55 **Standard material** for hydraulics, good compressive strength, good sliding and wear properties, good extrusion resistance. Bronze filled Colour: Bronze to dark green	PT_04	NBR - 70 Shore A	N	-30 to +100	Steel tubes Steel, hardened Cast iron	40
		NBR - Low temp. 70 Shore A	T	-45 to +80		
		FKM - 70 Shore A	V	-10 to +135#		
Material TR12 For all lubricating fluids, hard mating surfaces, **good sliding properties, low friction** Colour pigment filled Colour: Dark green	PT_0A	NBR - 70 Shore A	N	-30 to +100	Steel tubes Steel, hardened	40
		NBR - Low temp. 70 Shore A	T	-45 to +80		
		FKM - 70 Shore A	V	-10 to +135#		
Material TR25 For all lubricating and non-lubricating hydraulic fluids, good chemical resistance, **good dielectric properties.** Glass fibre filled+graphite+MoS2 Colour: Grey to blue	PT_0J	NBR - 70 Shore A	N	-30 to +100	Steel tubes Steel, hardened Cast iron	40
		NBR - Low temp. 70 Shore A	T	-45 to +80		
		FKM - 70 Shore A	V	-10 to +135#		
Material TR30 **For water hydraulic, oil hydraulic and pneumatic for all lubricating and non-lubricating fluids,** high extrusion resistance, good chemical resistance. Carbon, graphite filled Colour: Black	PT_0C	NBR - 70 Shore A	N	-30 to +100	Steel Stainless steel	40
		NBR - Low temp. 70 Shore A	T	-45 to +80		
		FKM - 70 Shore A	V	-10 to +135		
		EPDM - 70 Shore A	E**	-45 to +135#		

Limited high temperature due to POM Back-up Ring. * The Energiser Operation Temperature is only valid in mineral hydraulic oil.
** Material not suitable for mineral oils. Highlighted material is standard.

Material Code definition:
PHD seal with slipper seal material TR55 and NBR energiser:
PTN04

■ Installation Recommendation

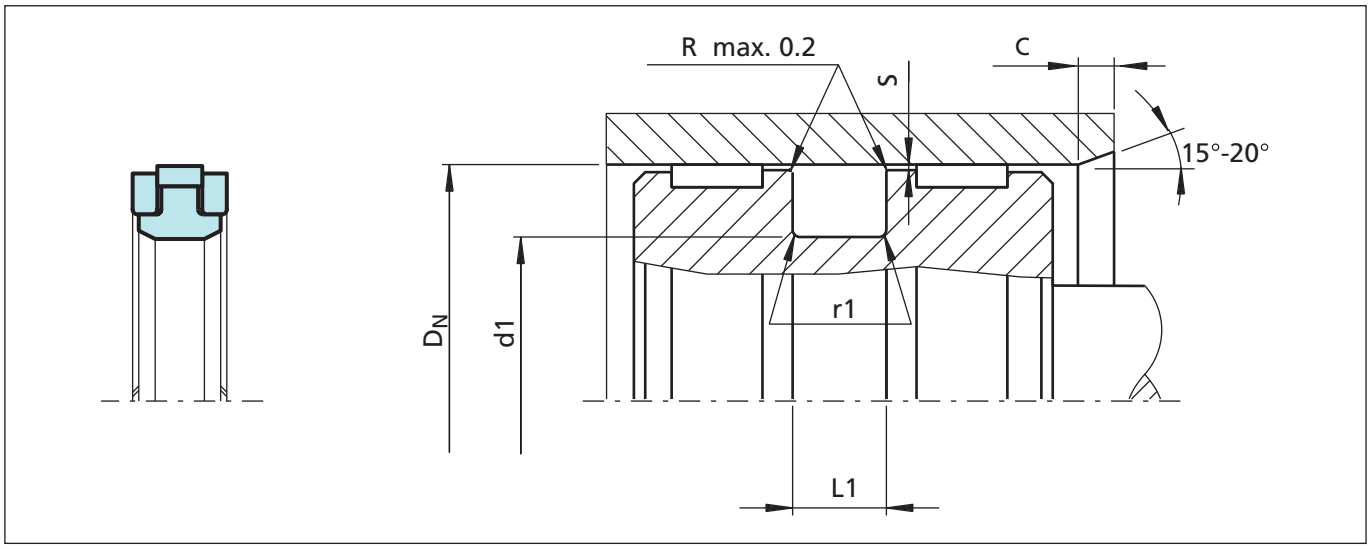

Figure 26 Installation drawing

Ordering Example

PHD Seal, complete.

Bore diameter:	D_N = 80.0 mm
TSS Part No.:	PKP000800 (from Table XXV)
Seal:	PTFE TR55
Energiser:	NBR
Back-up ring:	POM
Material set-code:	PTN04
Polypac Ref. No.:	PHD 8065

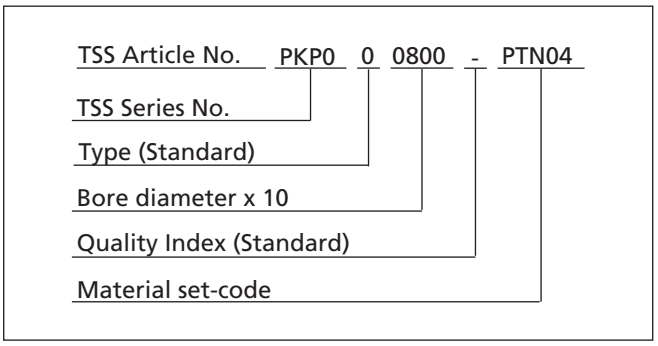

Table XXV Installation dimensions / TSS Part No.

Bore Dia.	Groove Dia.	Groove Width	Inlet Chamfer	Radius	TSS Part No.	Polypac Ref. No.
D_N H9	d1 h9	L_1 +0.2	C	r_1		
50.0	36.0	9.0	5.0	0.3	PKP000500	PHD 5036
55.0	41.0	9.0	5.0	0.3	PKP000550	PHD 5541
60.0	46.0	9.0	5.0	0.3	PKP000600	PHD 6046
63.0	48.0	11.0	5.0	0.5	PKP000630	PHD 6348
65.0	50.0	11.0	5.0	0.5	PKP000650	PHD 6550
70.0	55.0	11.0	5.0	0.5	PKP000700	PHD 7055
75.0	60.0	11.0	5.0	0.5	PKP000750	PHD 7560
80.0	65.0	11.0	5.0	0.5	PKP000800	PHD 8065
85.0	70.0	11.0	5.0	0.5	PKP000850	PHD 8570

Radial Clearance (S): For pressure up to 35 MPa 0.50 For pressure from 35 MPa up to 60 MPa 0.30

POLYPAC® PHD Seal

Bore Dia.	Groove Dia.	Groove Width	Inlet Chamfer	Radius	TSS Part No.	Polypac Ref. No.
D_N H9	**d1** h9	L_1 +0.2	**C**	r_1		
90.0	75.0	11.0	5.0	0.5	PKP000900	PHD 9075
95.0	80.0	12.5	5.0	0.5	PKP000950	PHD 9580
100.0	85.0	12.5	5.0	0.5	PKP001000	PHD 10085
105.0	90.0	12.5	5.0	0.5	PKP001050	PHD 10590
110.0	95.0	12.5	5.0	0.5	PKP001100	PHD 11095
115.0	100.0	12.5	5.0	0.5	PKP001150	PHD 115100
120.0	105.0	12.5	5.0	0.5	PKP001200	PHD 120105
125.0	102.0	16.0	6.5	0.6	PKP001250	PHD 125102
130.0	107.0	16.0	6.5	0.6	PKP001300	PHD 130107
135.0	112.0	16.0	6.5	0.6	PKP001350	PHD 135112
140.0	117.0	16.0	6.5	0.6	PKP001400	PHD 140117
145.0	122.0	16.0	6.5	0.6	PKP001450	PHD 145122
150.0	127.0	16.0	6.5	0.6	PKP001500	PHD 150127
155.0	132.0	16.0	6.5	0.6	PKP001550	PHD 155132
160.0	137.0	16.0	6.5	0.6	PKP001600	PHD 160137
165.0	142.0	16.0	6.5	0.6	PKP001650	PHD 165142
170.0	147.0	16.0	6.5	0.6	PKP001700	PHD 170147
180.0	157.0	16.0	6.5	0.6	PKP001800	PHD 180157

Radial Clearance (S): For pressure up to 35 MPa 0.50 For pressure from 35 MPa up to 60 MPa 0.30

Turcon® Stepseal® 2K

Single Acting

Rubber Energized Plastic Faced Seal

Material:
Turcon®, Zurcon® and Elastomer

■ Turcon® Stepseal® 2K*

Description

The Stepseal® 2K is a single-acting seal element consisting of a seal ring of high-grade Turcon® or Zurcon® materials and an O-Ring as energizing element.

The Stepseal® 2K was originally developed and patented by Trelleborg Sealing Solutions as a rod seal. Due to its outstanding properties, however, it is equally well suited as a single-acting piston seal where high demands are made on positional accuracy and free movement.

* Patented and patent pending geometry

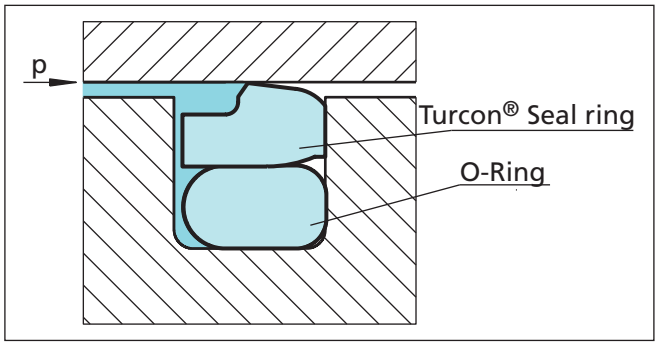

Figure 27 Turcon® Stepseal® 2K

Advantages

- High static and dynamic sealing effect
- Stick-slip free operation for precise control
- High abrasion resistance and high resistance to extrusion
- Long service life
- Simple groove design, one-piece piston possible
- Wide range of application temperatures and high resistance to chemicals, depending on the choice of O-Ring material
- Simple installation without seal edge deformation
- Available for all diameters up to 2.700 mm
- Low friction

Application Examples

The Turcon® Stepseal® 2K is the recommended sealing element for single acting pistons in hydraulic components for:

- Injection moulding machines
- Machine tools
- Presses
- Mobile cranes

Technical Data

Operating conditions:

Pressure:	Up to 60 MPa
Speed:	Up to 15 m/s, with reciprocating movements, frequency up to 5 Hz
Temperature:	-45 °C to +200 °C **)
Media:	Mineral oil-based hydraulic fluids, flame retardant hydraulic fluids, environmentally safe hydraulic fluids (bio-oils), phosphate ester, water, air and others,depending on the seal and O-Ring material compatibility (see Table XXVII)
Clearance:	The maximum permissible radial clearance S_{max} is shown in Table XXVIII, as a function of the operating pressure and functional diameter.

Important Note:
The above data are maximum values and cannot be used at the same time. e.g. the maximum operating speed depends on material type, pressure, temperature and gap value.
Temperature range also dependent on medium.

*) In the case of unpressurized applications in temperatures below 0°C please contact our application engineers for assistance!

Materials

The following material combinations have proven effective for hydraulic applications:

All round material for hydraulic applications with reciprocating, short stroke or helical movements in mineral oils, flame retardant hydraulic fluids HFC, phosphate ester, bio-oils or fluids having less satisfactory lubricating properties:

Turcon® Stepseal® 2K:	Turcon® M12	
O-Ring:	NBR, 70 Shore A	N
	FKM, 70 Shore A	V
Set code:	M12N or M12V	

For medium to heavy applications with reciprocating movements in mineral oils and other media with good lubrication:

Turcon® Stepseal® 2K:	Turcon® T46	
O-Ring:	NBR, 70 Shore A	N
	FKM, 70 Shore A	V
Set code:	T46N or T46V	

For specific applications, all Turcon® materials are available.

Other viable material combinations are listed in Table XXVII.

Series

Different cross-section sizes are recommended as a function of the seal diameters.

Table XXVIII shows the relationship between the series number according to the seal diameter range and the different application class sizes. These application classes are:

Standard application:	General applications in which no exceptional operating conditions exist.
Light application:	Applications with demands for reduced friction or for smaller grooves.
Heavy-duty application:	For exceptional operating loads such as high pressures, pressure peaks, etc.

Table XXVI Available range

Series No.	Bore Diameter D_N H9
PSK00	6.0 - 140.0
PSK10	10.0 - 140.0
PSK20	18.0 - 320.0
PSK30	40.0 - 400.0
PSK40	50.0 - 700.0
PSK80	133.0 - 999.9
PSK50	256.0 - 999.9
PSK5X	1000.0 - 1200.0
PSK60	750.0 - 999.9
PSK6X	1000.0 - 2700.0

For the recommended range see Table XXVIII.

Groove

Stepseal® 2K is also available on request for the groove sizes to ISO 7425/1.

Table XXVII Turcon® and Zurcon® Materials for Stepseal® 2K

Material, Applications, Properties	Code	O-Ring Material Shore A	Code	O-Ring Operating Temp.* °C	Mating Surface Material	MPa max. Dynamic
Turcon® M12 **First material choice** for seals in linear motion Overall improved properties For new constructions and updating For all commonly applied hydraulic fluids including fluids with low lubrication performance Lowest friction and best sliding properties Lowest wear on seals Improved absorption of abrasive contaminants No wear or abrasion of counter surface Mineral fibre and Additives filled Colour: Dark grey	M12	NBR - 70	N	-30 to +100	Steel Steel hardened Steel chrome plated (rod) Steel plated (rod) Cast iron Stainless steel Titanium	50
		NBR - 70 Low temp.	T	-45 to +80		
		FKM - 70	V	-10 to +200		
Turcon® T05 For lubricating fluids Also for gas service Very low friction Very good sliding and sealing properties Colour: Turquoise	T05	NBR - 70	N	-30 to +100	Steel hardened Steel chrome plated (rod)	20
		NBR - 70 Low temp.	T	-45 to +80		
		FKM - 70	V	-10 to +200		
Turcon® T08 For lubricating fluids and linear motion **Very high compressive strength and extrusion resistance** Hard counter surfaces is recommended Bronze filled Colour: Light to dark brown, which may have variations in shading	T08	NBR - 70	N	-30 to +100	Steel hardened Steel chrome plated (rod) Cast iron	60
		NBR - 70 Low temp.	T	-45 to +80		
		FKM - 70	V	-10 to +200		
Turcon® T10 For hydraulic and pneumatic For lubricating and non-lubricating fluids High extrusion resistance Good chemical resistance Not for electrically conducting fluids BAM tested Carbon, graphite filled Colour: Black	T10	NBR - 70	N	-30 to +100	Steel Steel hardened Steel chrome plated (rod) Stainless steel	40
		NBR - 70 Low temp.	T	-45 to +80		
		FKM - 70	V	-10 to +200		
		EPDM - 70	E**	-45 to +145		
Turcon® T29 For lubricating and non-lubricating fluids Good extrusion resistance Surface texture is not suitable for gas sealing Not for electrically conducting fluids Carbon fibre filled Colour: Grey	T29	NBR - 70	N	-30 to +100	Steel Steel hardened Steel chrome plated (rod) Cast iron Stainless steel	30
		NBR - 70 Low temp.	T	-45 to +80		
		FKM - 70	V	-10 to +200		
		EPDM - 70	E**	-45 to +145		
Turcon® T40 For lubricating and non-lubricating fluids High frequency and short strokes **Water hydraulics** Surface texture is not suitable for gas sealing Carbon fibre filled Colour: Grey	T40	NBR - 70	N	-30 to +100	Steel hardened Steel chrome plated (rod) Cast iron Stainless steel Aluminium	25
		NBR - 70 Low temp.	T	-45 to +80		
		FKM - 70	V	-10 to +200		
		EPDM - 70	E**	-45 to +145		

Material, Applications, Properties	Code	O-Ring Material Shore A	Code	O-Ring Operating Temp.* °C	Mating Surface Material	MPa max. Dynamic
Turcon® T46 For lubricated hydraulics in linear motion High compressive strength High extrusion resistance Very good sliding and wear properties BAM tested Bronze filled Colour: Light to dark brown, which may have variations in shading	T46	NBR - 70	N	-30 to +100	Steel hardened Steel chrome plated (rod) Cast iron	50
		NBR - 70 Low temp.	T	-45 to +80		
		FKM - 70	V	-10 to +200		
Zurcon® Z51*** For mineral oil based fluids **Very high abrasion and extrusion resistance** For counter surface with rougher surface finish Limited chemical resistance Max. working temperature 110 °C Cast polyurethane Colour: Yellow to light-brown	Z51	NBR - 70	N	-30 to +100	Steel Steel hardened Steel chrome plated (rod) Cast iron Stainless steel Ceramic coating	60
		NBR - 70 Low temp.	T	-45 to +80		
Zurcon® Z80 For lubricating and non-lubricating fluids Water based fluids, air and gases Dry air pneumatics High abrasion and extrusion resistance For service in abrasive conditions and media with particles Good chemical resistance Limited temperature capability (-60 to +80 °C) UHMWPE (Ultra High Molecular Weight Polyethylene) Colour: White to off-white	Z80	NBR - 70	N	-30 to (+100)	Steel Steel hardened Steel chrome plated (rod) Stainless steel Aluminium Ceramic coating	35
		NBR - 70 Low temp.	T	-45 to +80		
		EPDM - 70	E**	-45 to (+145)		

* The O-Ring Operation Temperature is only valid in mineral hydraulic oil (except EPDM). ** Material not suitable for mineral oils.
*** Max. Ø 2300 BAM: Tested by "Bundesanstalt Materialprüfung, Germany". Highlighted materials are standard.

■ Installation Recommendation

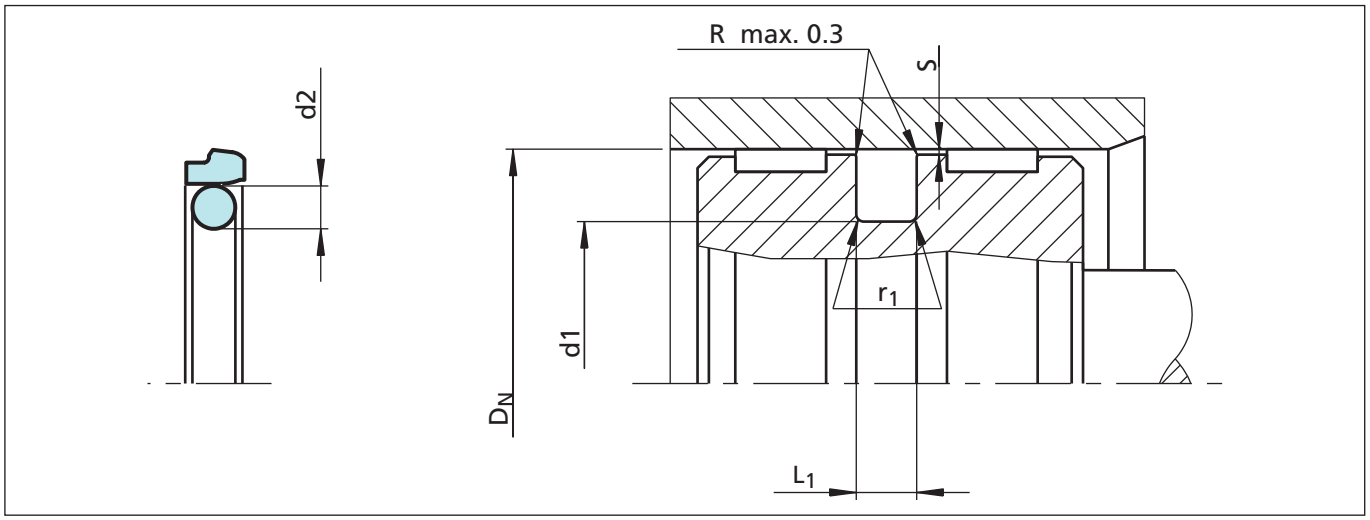

Figure 28 Installation drawing

Table XXVIII Installation Dimensions - Standard recommendations

Series No.	Bore Diameter D_N H9			Groove Diameter	Groove Width	Radius	Radial Clearance S max*			O-Ring Cross Sec.
	Standard Application	Light Application	Heavy-Duty Application	d_1 h9	L1 +0.2	r_1	10 MPa	20 MPa	40 MPa	d_2
PSK0	8 - 16.9	17 - 26.9	- -	D_N - 4.9	2.2	0.4	0.30	0.20	0.15	1.78
PSK1	17 - 26.9	27 - 59.9	- -	D_N - 7.3	3.2	0.6	0.40	0.25	0.15	2.62
PSK2	27 - 59.9	60 - 199.9	17 - 26.9	D_N - 10.7	4.2	1.0	0.50	0.30	0.20	3.53
PSK3	60 - 199.9	200 - 255.9	27 - 59.9	D_N - 15.1	6.3	1.3	0.70	0.40	0.25	5.33
PSK4	200 - 255.9	256 - 669.9	60 - 199.9	D_N - 20.5	8.1	1.8	0.80	0.60	0.35	7.00
PSK8	256 - 669.9	670 - 999.9	200 - 255.9	D_N - 24.0	8.1	1.8	0.90	0.70	0.40	7.00
PSK5	670 - 999.9	- -	256 - 669.9	D_N - 28.0	9.5	2.5	1.00	0.80	0.60	8.40
PSK5X	- -	1000 - 1200	- -	D_N - 28.0	9.5	2.5	1.00	0.80	0.60	8.40
PSK6	- -	- -	670 - 999.9	D_N - 38.0	13.8	3.0	1.20	0.90	0.60	12.00
PSK6X	1000 - 2700	- -	- -	D_N - 38.0	13.8	3.0	1.20	0.90	0.60	12.00

* At pressures **> 40 MPa** use diameter tolerance H8/f8 (bore/piston) in area of seal or consult TSS for alternative material or profiles.
TSS Slydring® / Wear Rings are not applicable at very small radical clearances. Please consult the Slydring® catalog.
O-Rings with 12 mm cross section are delivered as special profilring

Ordering example

Turcon® Stepseal® 2K, complete with O-Ring, standard application, Series PSK3 (from Table XXVIII).
Bore diameter: D_N = 80.0 mm
TSS Part No. PSK300800 (from Table XXIX)

Select the material from Table XXVII. The corresponding code numbers are appended to the TSS Part No. (from Table XXIX). Together they form the TSS Article No.
For all intermediate sizes not shown in Table XXIX, the TSS Article No. can be determined from the example opposite.

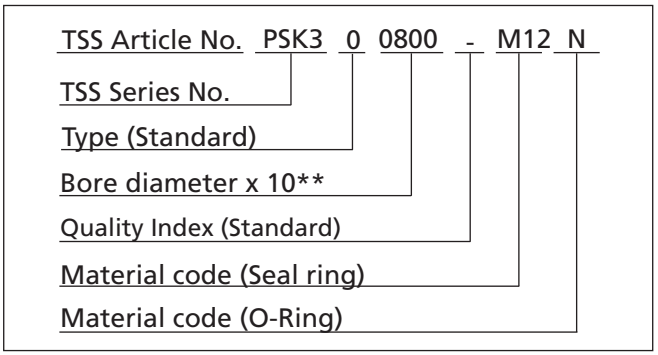

** For diameters ≥ 1000.0 mm multiply only by factor 1.
Example: PSK6 for diameter 1200.0 mm.
TSS Article No.: PSK6**X1200** - M12N.

Table XXIX Installation dimensions / TSS Part No.

Bore Dia. D_N H9	Groove Dia. d_1 h9	Groove Width L_1 +0.2	TSS Part No.	O-Ring Dimensions
9.0	4.1	2.2	PSK000090	3.68 x 1.78
10.0	5.1	2.2	PSK000100	4.80 x 1.8
12.0	**7.1**	**2.2**	**PSK000120**	**6.70 x 1.8**
14.0	9.1	2.2	PSK000140	8.75 x 1.8
15.0	10.1	2.2	PSK000150	9.25 x 1.78
16.0	**11.1**	**2.2**	**PSK000160**	**10.82 x 1.78**
18.0	10.7	3.2	PSK100180	9.19 x 2.62
20.0	**15.1**	**2.2**	**PSK000200**	**14.00 x 1.78**
20.0	**12.7**	**3.2**	**PSK100200**	**12.37 x 2.62**
22.0	14.7	3.2	PSK100220	13.94 x 2.62
25.0	**17.7**	**3.2**	**PSK100250**	**17.12 x 2.62**
25.0	**14.3**	**4.2**	**PSK200250**	**13.87 x 3.53**
28.0	17.3	4.2	PSK200280	15.47 x 3.53
30.0	22.7	3.2	PSK100300	21.89 x 2.62
30.0	19.3	4.2	PSK200300	18.66 x 3.53
32.0	**24.7**	**3.2**	**PSK100320**	**23.47 x 2.62**
32.0	**21.3**	**4.2**	**PSK200320**	**20.22 x 3.53**
35.0	24.3	4.2	PSK200350	23.40 x 3.53
40.0	**32.7**	**3.2**	**PSK100400**	**31.42 x 2.62**
40.0	**29.3**	**4.2**	**PSK200400**	**28.17 x 3.53**
42.0	31.3	4.2	PSK200420	29.75 x 3.53
45.0	34.3	4.2	PSK200450	32.92 x 3.53
48.0	37.3	4.2	PSK200480	36.09 x 3.53
50.0	**39.3**	**4.2**	**PSK200500**	**37.70 x 3.53**
50.0	**34.9**	**6.3**	**PSK300500**	**32.69 x 5.33**
52.0	41.3	4.2	PSK200520	40.87 x 3.53
55.0	44.3	4.2	PSK200550	44.04 x 3.53
60.0	44.9	6.3	PSK300600	43.82 x 5.33
63.0	**52.3**	**4.2**	**PSK200630**	**50.39 x 3.53**
63.0	**47.9**	**6.3**	**PSK300630**	**46.99 x 5.33**
65.0	49.9	6.3	PSK300650	46.99 x 5.33
70.0	59.3	4.2	PSK200700	56.74 x 3.53
70.0	54.9	6.3	PSK300700	53.34 x 5.33
75.0	59.9	6.3	PSK300750	56.52 x 5.33
80.0	**64.9**	**6.3**	**PSK300800**	**62.87 x 5.33**
80.0	**59.5**	**8.1**	**PSK400800**	**58 x 7.0**

Bore Dia. D_N H9	Groove Dia. d_1 h9	Groove Width L_1 +0.2	TSS Part No.	O-Ring Dimensions
85.0	69.9	6.3	PSK300850	69.22 x 5.33
85.0	64.5	8.1	PSK400850	63 x 7.0
90.0	74.9	6.3	PSK300900	72.39 x 5.33
90.0	69.5	8.1	PSK400900	68 x 7.0
95.0	79.9	6.3	PSK300950	78.74 x 5.33
95.0	74.5	8.1	PSK400950	73 x 7.0
100.0	**84.9**	**6.3**	**PSK301000**	**81.92 x 5.33**
100.0	**79.5**	**8.1**	**PSK401000**	**78 x 7.0**
105.0	89.9	6.3	PSK301050	88.27 x 5.33
105.0	84.5	8.1	PSK401050	83 x 7.0
106.0	90.9	6.3	PSK301060	88.27 x 5.33
110.0	94.9	6.3	PSK301100	91.44 x 5.33
110.0	89.5	8.1	PSK401100	88 x 7.0
115.0	99.9	6.3	PSK301150	97.79 x 5.33
115.0	94.5	8.1	PSK401150	93 x 7.0
120.0	104.9	6.3	PSK301200	104.14 x 5.33
120.0	99.5	8.1	PSK401200	98 x 7.0
125.0	**109.9**	**6.3**	**PSK301250**	**107.32 x 5.33**
125.0	**104.5**	**8.1**	**PSK401250**	**103 x 7.0**
130.0	114.9	6.3	PSK301300	113.67 x 5.33
130.0	109.5	8.1	PSK401300	108 x 7.0
135.0	114.5	8.1	PSK401350	113.67 x 7.0
140.0	119.5	8.1	PSK401400	116.84 x 7.0
145.0	124.5	8.1	PSK401450	123.19 x 7.0
150.0	129.5	8.1	PSK401500	126.37 x 7.0
155.0	139.9	6.3	PSK301550	135.89 x 5.33
160.0	**144.9**	**6.3**	**PSK301600**	**142.24 x 5.33**
160.0	**139.5**	**8.1**	**PSK401600**	**135.89 x 7.00**
165.0	149.9	6.3	PSK301650	148.49 x 5.33
165.0	144.5	8.1	PSK401650	142.24 x 7.0
170.0	149.5	8.1	PSK401700	145.42 x 7.0
175.0	159.9	6.3	PSK301750	158.12 x 5.33
180.0	164.9	6.3	PSK301800	164.47 x 5.33
180.0	159.5	8.1	PSK401800	158.12 x 7.0
190.0	174.9	6.3	PSK301900	170.82 x 5.33
190.0	169.5	8.1	PSK401900	164.47 x 7.0

Bore Dia. D_N H9	Groove Dia. d_1 h9	Groove Width L_1 +0.2	TSS Part No.	O-Ring Dimensions
200.0	**184.9**	**6.3**	**PSK302000**	**183.52 x 5.33**
200.0	**179.5**	**8.1**	**PSK402000**	**177.17 x 7.0**
205.0	184.5	8.1	PSK402050	183.52 x 7.0
210.0	189.5	8.1	PSK402100	183.52 x 7.0
220.0	204.9	6.3	PSK302200	202.57 x 5.33
220.0	199.5	8.1	PSK402200	196.22 x 7.0
230.0	209.5	8.1	PSK402300	208.92 x 7.0
240.0	219.5	8.1	PSK402400	215.27 x 7.0
250.0	**229.5**	**8.1**	**PSK402500**	**227.97 x 7.0**
250.0	**226.0**	**8.1**	**PSK802500**	**227.97 x 7.0**
260.0	236.0	8.1	PSK802600	227.97 x 7.0
270.0	246.0	8.1	PSK802700	240.67 x 7.0
280.0	256.0	8.1	PSK802800	253.37 x 7.0
300.0	276.0	8.1	PSK803000	266.07 x 7.0
306.0	285.5	8.1	PSK403060	278.77 x 7.0
310.0	286.0	8.1	PSK803100	278.77 x 7.0
320.0	**299.5**	**8.1**	**PSK403200**	**291.47 x 7.0**
320.0	**296.0**	**8.1**	**PSK803200**	**291.47 x 7.0**
330.0	306.0	8.1	PSK803300	304.17 x 7.0
340.0	316.0	8.1	PSK803400	316.87 x 7.0
345.0	324.5	8.1	PSK403450	316.87 x 7.0
350.0	326.0	8.1	PSK803500	316.87 x 7.0
360.0	336.0	8.1	PSK803600	329.57 x 7.0
370.0	346.0	8.1	PSK803700	342.27 x 7.0
380.0	356.0	8.1	PSK803800	354.97 x 7.0
400.0	**376.0**	**8.1**	**PSK804000**	**367.67 x 7.0**
420.0	396.0	8.1	PSK804200	393.07 x 7.0
430.0	406.0	8.1	PSK804300	405.26 x 7.0
440.0	416.0	8.1	PSK804400	405.26 x 7.0
450.0	426.0	8.1	PSK804500	417.96 x 7.0
480.0	456.0	8.1	PSK804800	456.06 x 7.0
500.0	**476.0**	**8.1**	**PSK805000**	**468.76 x 7.0**
520.0	499.5	8.1	PSK405200	494.16 x 7.0
540.0	516.0	8.1	PSK805400	506.86 x 7.0
600.0	576.0	8.1	PSK806000	557.66 x 7.0
650.0	626.0	8.1	PSK806500	608.08 x 7.0

Bore Dia. D_N H9	Groove Dia. d_1 h9	Groove Width L_1 +0.2	TSS Part No.	O-Ring Dimensions
700.0	672.7	9.5	PSK507000	670 x 8.4
800.0	772.7	9.5	PSK508000	770 x 8.4
860.0	832.7	9.5	PSK508600	830 x 8.4
900.0	872.7	9.5	PSK509000	870 x 8.4
920.0	892.7	9.5	PSK509200	890 x 8.4
1000.0	972.7	9.5	PSK5X1000	970 x 8.4
1000.0	962.0	13.8	PSK6X1000	960 x 12.0
1200.0	1172.7	9.5	PSK5X1200	1170 x 8.4
1200.0	1162.0	13.8	PSK6X1200	1160 x 12.0
1500.0	1462.0	13.8	PSK6X1500	1460 x 12.0
2000.0	1962.0	13.8	PSK6X2000	1960 x 12.0
2700.0	2662.0	13.8	PSK6X2700	2660 x 12.0

The bore diameters in **bold** type comply with the recommendations of ISO 3320.
Other dimensions and all intermediate sizes up to 2700 mm diameter including imperial (inch) sizes can be supplied.

All O-Rings with 12 mm cross section are delivered as special Profilring.

Turcon® Stepseal® V

Single Acting

Rubber Energized Plastic Faced Seal

Material:
Turcon®, Zurcon® and Elastomer

■ Turcon® Stepseal® V

Introduction

First invented and patented* by Trelleborg Sealing Solutions, a built-in check valve function promised to eliminate pressure trap between seals in tandem sealing systems. Extensive development has now brought the inherent prevention of pressure build-up together with dependable sealing performance in one element; Turcon® Stepseal® V.

Stepseal® V has the efficient seal performance and outstanding service life of the Stepseal® range, and the reliable prevention of pressure build-up brought by a refined check valve function. In dynamic applications Stepseal® V brings efficient, reliable sealing performance under even the most demanding service conditions.

Stepseal® V offers a uniform, low friction characteristic of the sealing system, throughout its whole life, by preventing undefined pressurisation of the secondary seal element.

Characteristics

- Primary seal with hydrostatic ventilation
- Check valve function
- Hydrodynamic back-pumping
- Stabilised position in the groove
- Fits existing Turcon® Stepseal® groove
- Available for ISO 7425/1 groove
- Prolonged seal life
- Increased leakage control
- Only usable with a secondary seal

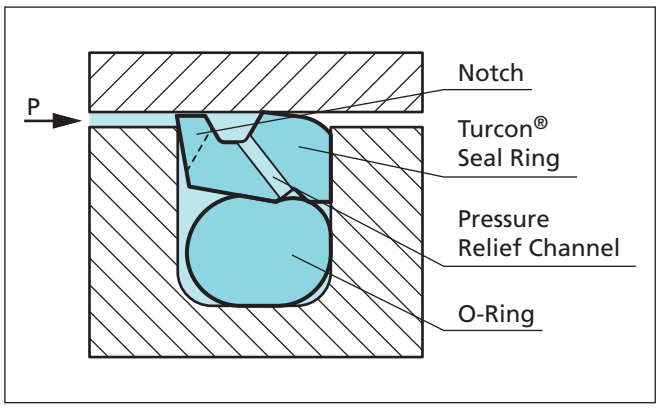

Figure 29 Turcon® Stepseal® V with tight axial groove fit

Description

Stepseal® V is a new generation primary seal designed for use in seal systems based on the dynamic, unidirectional Stepseal® sealing concept. Applied as a piston seal, Stepseal® V is preferably used with a double-acting seal from the Turcon® range of piston seals. Under extreme performance requirements Stepseal® V offers improved leakage control, extended service life and increased reliability.

The sealing performance of the patented Stepseal® V design – see Figure 29 – results from a combination of the hydrodynamic properties of the seal and the O-Ring and the hydrostatic pressure relief check valve function.

The classic Stepseal® operation ensures a controlled pressure gradient that minimizes fluid adherence to the cylinder bore during the stroke, and enables residual fluid film on the bore to be returned under the seal on the return stroke.

The O-Ring check valve function controls the operation of the pressure relief channel: When the seal is pressurised by the system pressure the O-Ring keeps the channel closed to ensure that the hydraulic fluid is not passing through the channel and further between the groove wall and the Turcon® Seal Ring.

If pressure, higher than the actual system pressure, appears between the Stepseal® V and the secondary seal, the O-Ring is opening the relief groove somewhere at the circumference and the inter-seal pressure is immediately relieved. Due to the circumferential groove with integrated relief hole the relief function is independent from side load and deflection of the seal or O-Ring.

These patented design features further improve the performance of the Stepseal® concept at all service conditions. Besides giving high static and dynamic sealing performance, the Stepseal® V secures that build-up of intermediate pressure, which can be found with tandem seal configurations, is non-existent, regardless of the pressure, speed, deflection and piston movements.

Stepseal® V is available in high-grade Turcon® or Zurcon® materials with outstanding sliding and wear resistance properties. It is installed in Trelleborg Sealing Solutions standard grooves and according to ISO 7425, using an O-Ring as energising element.

* Patented and patent pending geometry:
DE 9654357; 24. 2. 996

Advantages:

- Same basic function as Turcon® Stepseal® 2K
- No system pressure on secondary sealing element
- Check valve function of O-Ring eliminates risk of fluid bypassing the seal during pressure loading when pressurised
- Independent of any speed relation of counter surface
- Independent of stroke length
- Independent of deflection
- Minimum contribution of friction of secondary sealing element
- Minimum wear of secondary sealing element
- Increased leakage control
- Prolonged seal life
- Increased operational reliability
- Fits standard Turcon® Stepseal® 2K groove dimensions as well as ISO 7425 seal housings

Application Examples

- Piston accumulators
- Single acting hydraulic cylinders
- Piston designs with tandem sealing systems
- Mobile crane boom cylinders
- Hydro plant cylinders

Stepseal® V is particularly recommended in floating piston accumulators as primary seal on the oil side in combination with AQ-Seal®.

Technical data

Operating conditions:

Pressure:	Up to 50 MPa (Turcon® M12) Up to 60 MPa (Turcon® T08 and Zurcon® Z51)
Speed:	Up to 15 m/s with linear movements, frequency up to 15 Hz
Temperature:	-45 °C to +200 °C *) (depending on seal and O-Ring material)
Media:	Mineral oil based hydraulic fluids, flame retardant hydraulic fluids, environmentally safe hydraulic fluids (plant based oils), phosphate ester, water and others, depending on the seal and O-Ring material compatibility - see Table XXXI.
Clearance:	The maximum permissible radial clearance Smax is shown in Table XXXII, as a function of the operating pressure and functional diameter.

Important Note:
The above data are maximum values and cannot be used at the same time. e.g. the maximum operating speed depends on material type, pressure, temperature and gap value.

*) in the case of unpressurized applications in temperatures below 0° C please contact our application engineers for assistance!

Materials

The following material combinations have proven effective for hydraulic applications:

All round material for hydraulic applications with reciprocating, short stroke or helical movements in mineral oils, flame retardant hydraulic fluids HFC, phosphate ester, bio-oils or fluids having less satisfactory lubricating properties:

Turcon® Stepseal® V:	Turcon® M12	
O-Ring:	NBR, 70 Shore A	N
	FKM, 70 Shore A	V
Set code:	M12N or M12V	

For medium to heavy applications with reciprocating movements in mineral oils and other media with good lubrication:

Turcon® Stepseal® V:	Turcon® T46	
O-Ring:	NBR, 70 Shore A	N
	FKM, 70 Shore A	V
Set code:	T46N or T46V	

For specific applications, all Turcon® materials are available. Other viable material combinations are listed in Table XXXI.

Installation Instructions

Stepseal® V is preferably installed in closed grooves according to Figure 6, 7 and 8.

Series

Different cross-section sizes are recommended as a function of the seal diameters

Table XXX, shows the relationship between the series number according to the seal diameter range and the different application class sizes. These application classes are:

Standard application:	General applications in which no exceptional operating conditions exist.
Light application:	Applications with demands for reduced friction or for smaller grooves.
Heavy-duty application:	For exceptional operating loads such as high pressures, pressure peaks, etc.

Table XXX Available range

Series No.	Piston Diameter D_N H9
PSV20	15.0 - 320.0
PSV30	18.0 – 480.0
PSV40	50.0 – 700.0
PSV80	133.0 - 999.9
PSV50	256.0 - 999.9
PSV5X	1000.0 - 1200.0
PSV60	750.0 - 999.9
PSV6X	1000.0 - 2700.0

For the recommended range see Table XXXII.

Application Examples

- Piston accumulators
- Gas spring suspension
- Long stroke cylinders
- Crane boom cylinders
- Piling Barges
- Waterpower cylinders
- Watergate cylinders
- Theater hydraulics
- Safety systems

Redundant Sealing System

In many applications, secondary seal systems are demanded e.g. for safety requirement. Figure 30 shows such a tandem configuration with the Stepseal® V.

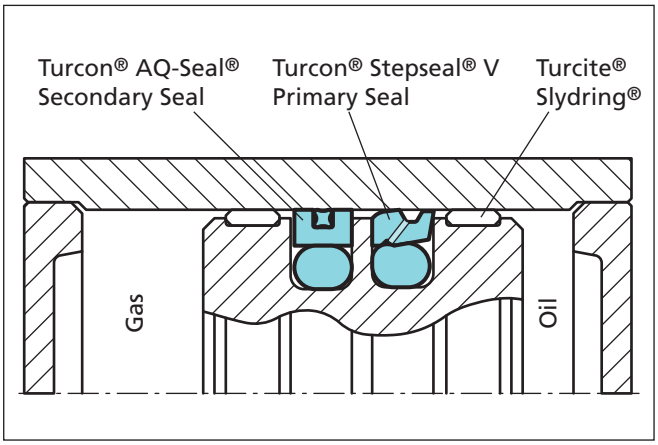

Figure 30 Tandem Turcon® Stepseal® V and Turcon® AQ-Seal® configuration in piston accumulator

When utilizing Stepseal® V, with valve function, there will be no pressure trap between the primary and secondary seals and no extra space between them is required to accumulate hydraulic fluid.

Depending on the application and the operating conditions, the combination of different materials offers a further improvement in the sealing efficiency and the service life of the system.

Table XXXI Turcon® and Zurcon® Materials for Stepseal® V

Material, Applications, Properties	Code	O–Ring Material Shore A	Code	O-Ring Operating Temp.* °C	Mating Surface Material	MPa max. Dyna-mic
Turcon® M12 **First material choice** for seals in linear motion Overall improved properties For new constructions and updating For all commonly applied hydraulic fluids including fluids with low lubrication performance Lowest friction and best sliding properties Lowest wear on seals Improved absorption of abrasive contaminants No wear or abrasion of counter surfaceMineral fibre and Additives filled Colour: Dark grey	M12	NBR - 70	N	-30 to +100	Steel Steel hardened Steel chrome plated (rod) Steel plated (rod) Cast iron Stainless steel Titanium	50
		NBR - 70 Low temp.	T	-45 to +80		
		FKM - 70	V	-10 to +200		
Turcon® T05 For lubricating fluids Also for gas service Very low friction Very good sliding and sealing properties Colour: Turquoise	T05	NBR - 70	N	-30 to +100	Steel hardened Steel chrome plated (rod)	20
		NBR - 70 Low temp.	T	-45 to +80		
		FKM - 70	V	-10 to +200		
Turcon® T08 For lubricating fluids and linear motion **Very high compressive strength and extrusion resistance** Hard counter surfaces is recommended Bronze filled Colour: Light to dark brown, which may have variations in shading	T08	NBR - 70	N	-30 to +100	Steel hardened Steel chrome plated (rod) Cast iron	60
		NBR - 70 Low temp.	T	-45 to +80		
		FKM - 70	V	-10 to +200		
Turcon® T10 For hydraulic and pneumatic For linear motion in lubricating and non-lubricating fluids High extrusion resistance Good chemical resistance Not for electrically conducting fluids BAM tested Carbon, graphite filled Colour: Black	T10	NBR - 70	N	-30 to +100	Steel Steel hardened Steel chrome plated (rod) Stainless steel	40
		NBR - 70 Low temp.	T	-45 to +80		
		FKM - 70	V	-10 to +200		
		EPDM - 70	E**	-45 to +145		
Turcon® T29 For lubricating and non-lubricating fluids Good extrusion resistance Surface texture is not suitable for gas sealing Not for electrically conducting fluids Carbon fibre filled Colour: Grey	T29	NBR - 70	N	-30 to +100	Steel Steel hardened Steel chrome plated (rod) Cast iron Stainless steel	30
		NBR -70 Low temp.	T	-45 to +80		
		FKM - 70	V	-10 to +200		
		EPDM - 70	E**	-45 to +145		
Turcon® T40 For lubricating and non-lubricating fluids High frequency and short strokes **Water hydraulics** Surface texture is not suitable for gas sealing Carbon fibre filled Colour: Grey	T40	NBR - 70	N	-30 to +100	Steel Steel hardened Steel chrome plated (rod) Cast iron Stainless steel Aluminium	25
		NBR - 70 Low temp.	T	-45 to +80		
		FKM - 70	V	-10 to +200		
		EPDM - 70	E**	-45 to +145		

* The O-Ring Operation Temperature is only valid in mineral hydraulic oil (except EPDM). ** Material not suitable for mineral oils.
BAM: Tested by "Bundesanstalt Materialprüfung, Germany". Highlighted materials are standard.

Material, Applications, Properties	Code	O–Ring Material Shore A	Code	O-Ring Operating Temp.* °C	Mating Surface Material	MPa max. Dyna-mic
Turcon® T46 For lubricated hydraulics in linear motion High compressive strength High extrusion resistance Very good sliding and wear properties BAM tested Bronze filled Colour: Light to dark brown, which may have variations in shading	T46	NBR - 70	N	-30 to +100	Steel hardened Steel chrome plated (rod) Cast iron	50
		NBR - 70 Low temp.	T	-45 to +80		
		FKM - 70	V	-10 to +200		
Zurcon® Z51*** For mineral oil based fluids **Very high abrasion and extrusion resistance** For counter surface with rougher surface finish Limited chemical resistance Max. working temperature 110 °C Cast polyurethane Colour: Yellow to light-brown	Z51	NBR - 70	N	-30 to +100	Steel Steel hardened Steel chrome plated (rod) Cast iron Stainless steel Ceramic coating	60
		NBR - 70 Low temp.	T	-45 to +80		
Zurcon® Z80 For lubricating and non-lubricating fluids Water based fluids, air and gases Dry air pneumatics High abrasion and extrusion resistance For service in abrasive conditions and media with particles Good chemical resistance Limited temperature capability (-60 to +80 °C) UHMWPE (Ultra High Molecular Weight Polyethylene) Colour: White to off-white	Z80	NBR- 70	N	-30 to (+100)	Steel Steel hardened Steel chrome plated (rod) Stainless steel Aluminium Ceramic coating	35
		NBR -70 Low temp.	T	-45 to +80		
		EPDM - 70	E**	-45 to(+145)		

* The O-Ring Operation Temperature is only valid in mineral hydraulic oil (except EPDM). ** Material not suitable for mineral oils.
BAM: Tested by "Bundesanstalt Materialprüfung, Germany". Highlighted materials are standard.

■ Installation Recommendation

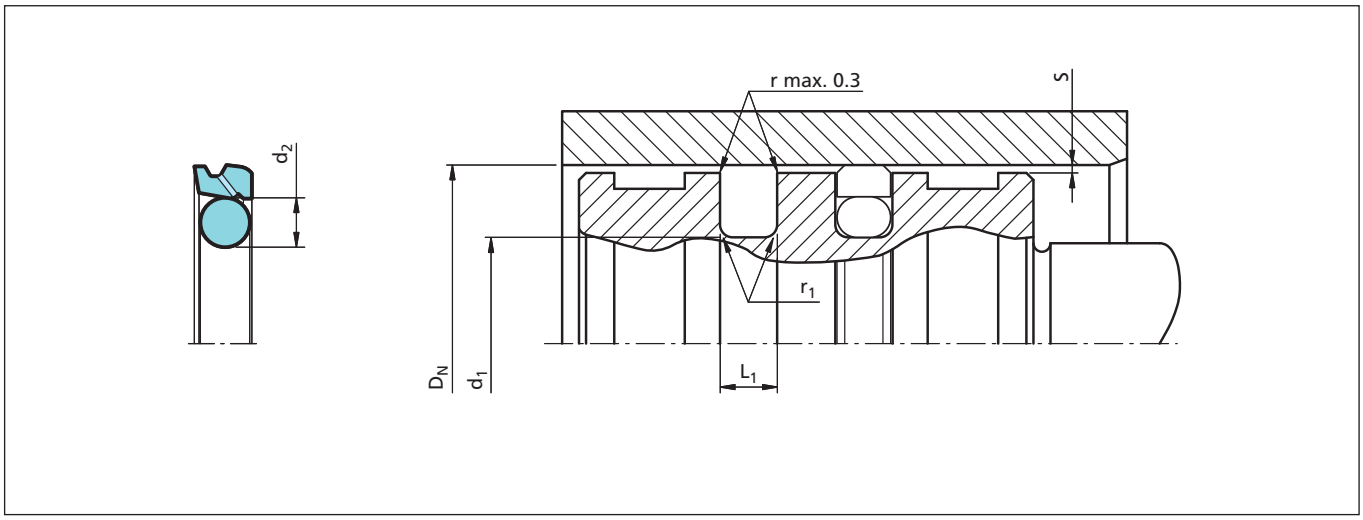

Figure 31 Installation drawing

Table XXXII Installation dimensions – Standard recommendations

Series No.	Rod Diameter D_N H9			Groove Diameter	Groove Width	Radius	Radial Clearance S_{max*}			O-Ring Cross-Section
	Standard Application	Light Application	Heavy Duty Application	D1 h9	L1 +0.2	r1	10 MPa	20 MPa	40 MPa	d2
PSV2	25.0 - 59.9	60.0 - 199.9	17.0 - 24.9	DN - 10.7	4.2	1.0	0.50	0.30	0.20	3.53
PSV3	60.0 - 199.9	200.0 - 255.9	25.0 - 59.9	DN - 15.1	6.3	1.3	0.70	0.40	0.25	5.33
PSV4	200.0 - 255.9	256.0 - 669.9	60.0 - 199.9	DN - 20.5	8.1	1.8	0.80	0.60	0.35	7.00
PSV8	256.0 - 669.9	670.0 - 999.9	200.0 - 255.9	DN - 24.0	8.1	1.8	0.90	0.70	0.40	7.00
PSV5	670.0 - 999.9	-	256.0 - 669.9	DN - 27.3	9.5	2.5	1.00	0.80	0.60	8.40
PSV5X	-	1000.0 - 1200.0	-	DN - 27.3	9.5	2.5	1.00	0.80	0.60	8.40
PSV6**	-	-	670.0 - 999.9	DN - 38.0	13.8	3.0	1.20	0.90	0.60	12.00
PSV6X**	1000.0 - 2700.0	-	-	DN - 38.0	13.8	3.0	1.20	0.90	0.60	12.00

* At pressures > 40 MPa use diameter tolerance H8/f8 (bore/piston) in area of seal or consult TSS for alternative material or profiles.

** All O-Rings with 12 mm cross section are delivered as special Profile ring.

Ordering example

Turcon® Stepseal® V complete with O-Ring, standard application;

Series: PSV3 (from Table Table XXXII).
Bore diameter: D_N = 80.0 mm
TSS Part No.: PSV300800 (from Table XXXIII).

Select the material from Table XXXI.
The corresponding code numbers are appended to the TSS Part No. Together these form the TSS Article Number.

The TSS Article Number for all intermediate sizes not shown in Table XXXIII can be determined following the example.

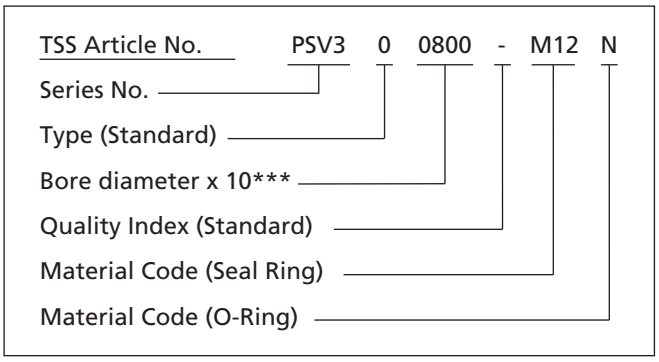

*** For diameters ≥ 1000.0 mm multiply only by factor 1.
Example: PSVK6 for diameter 1200.0 mm.
TSS Article no.: PSV6X1200 - M12N.

Table XXXIII Installation dimensions / TSS Part No.

Bore Dia. D_N f8/h9	Groove Dia. d1 H9	Groove Width L1 +0.2	TSS Part No.	O-Ring Dimensions
15.0	4.3	4.2	PSV200150	3.47 x 3.53
20.0	**9.3**	**4.2**	**PSV200200**	**8.47 x 3.53**
25.0	**14.3**	**4.2**	**PSV200250**	**13.87 x 3.53**
28.0	17.3	4.2	PSV200280	15.47 x 3.53
30.0	19.3	4.2	PSV200300	18.66 x 3.53
32.0	**21.3**	**4.2**	**PSV200320**	**20.22 x 3.53**
35.0	24.3	4.2	PSV200350	23.40 x 3.53
40.0	**29.3**	**4.2**	**PSV200400**	**28.17 x 3.53**
42.0	31.3	4.2	PSV200420	29.75 x 3.53
45.0	34.3	4.2	PSV200450	32.92 x 3.53
48.0	37.3	4.2	PSV200480	36.09 x 3.53
50.0	**39.3**	**4.2**	**PSV200500**	**37.69 x 3.53**
50.0	**34.9**	**6.3**	**PSV300500**	**32.69 x 5.33**
52.0	41.3	4.2	PSV200520	40.87 x 3.53
55.0	44.3	4.2	PSV200550	44.04 x 3.53
60.0	44.9	6.3	PSV300600	43.82 x 5.33
63.0	**52.3**	**4.2**	**PSV200630**	**50.39 x 3.53**
63.0	**47.9**	**6.3**	**PSV300630**	**46.99 x 5.33**
65.0	49.9	6.3	PSV300650	46.99 x 5.33
70.0	59.3	4.2	PSV200700	56.74 x 3.53
70.0	54.9	6.3	PSV300700	53.34 x 5.33
70.0	49.5	8.1	PSV400700	48.00 x 7.00
75.0	59.9	6.3	PSV300750	56.52 x 5.33
80.0	**64.9**	**6.3**	**PSV300800**	**62.87 x 5.33**
80.0	**59.5**	**8.1**	**PSV400800**	**58.00 x 7.00**
85.0	69.9	6.3	PSV300850	69.22 x 5.33
85.0	64.5	8.1	PSV400850	63.00 x 7.00
90.0	74.9	6.3	PSV300900	72.39 x 5.33
90.0	69.5	8.1	PSV400900	68.00 x 7.00
95.0	79.9	6.3	PSV300950	78.74 x 5.33
95.0	74.5	8.1	PSV400950	73.00 x 7.00
100.0	**84.9**	**6.3**	**PSV301000**	**81.92 x 5.33**
100.0	**79.5**	**8.1**	**PSV401000**	**78 .00x 7.00**
105.0	89.9	6.3	PSV301050	88.27 x 5.33
105.0	84.5	8.1	PSV401050	83.00 x 7.00
106.0	90.9	6.3	PSV301060	88.27 x 5.33

Bore Dia. D_N f8/h9	Groove Dia. d1 H9	Groove Width L1 +0.2	TSS Part No.	O-Ring Dimensions
110.0	94.9	6.3	PSV301100	91.44 x 5.33
110.0	89.5	8.1	PSV401100	88.00 x 7.00
115.0	99.9	6.3	PSV301150	97.79 x 5.33
115.0	94.5	8.1	PSV401150	93.00 x 7.00
120.0	104.9	6.3	PSV301200	104.14 x 5.33
120.0	99.5	8.1	PSV401200	98.00 x 7.00
125.0	**109.9**	**6.3**	**PSV301250**	**107.32 x 5.33**
125.0	**104.5**	**8.1**	**PSV401250**	**103.00 x 7.00**
130.0	114.9	6.3	PSV301300	113.67 x 5.33
130.0	109.5	8.1	PSV401300	108.00 x 7.00
135.0	114.5	8.1	PSV401350	113.67 x 7.00
140.0	119.5	8.1	PSV401400	116.84 x 7.00
145.0	124.5	8.1	PSV401450	123.19 x 7.00
150.0	129.5	8.1	PSV401500	126.37 x 7.00
155.0	139.9	6.3	PSV301550	135.89 x 5.33
160.0	**144.9**	**6.3**	**PSV301600**	**142.24 x 5.33**
160.0	**139.5**	**8.1**	**PSV401600**	**135.89 x 7.00**
165.0	149.9	6.3	PSV301650	148.49 x 5.33
165.0	144.5	8.1	PSV401650	142.24 x 7.00
170.0	149.5	8.1	PSV401700	145.42 x 7.00
175.0	159.9	6.3	PSV301750	158.12 x 5.33
180.0	164.9	6.3	PSV301800	164.47 x 5.33
180.0	159.5	8.1	PSV401800	158.12 x 7.00
190.0	174.9	6.3	PSV301900	170.82 x 5.33
190.0	169.5	8.1	PSV401900	164.47 x 7.00
200.0	**184.9**	**6.3**	**PSV302000**	**183.52 x 5.33**
200.0	**179.5**	**8.1**	**PSV402000**	**177.17 x 7.00**
205.0	184.5	8.1	PSV402050	183.52 x 7.00
210.0	189.5	8.1	PSV402100	183.52 x 7.00
220.0	204.9	6.3	PSV302200	202.57 x 5.33
220.0	199.5	8.1	PSV402200	196.22 x 7.00
230.0	209.5	8.1	PSV402300	208.90 x 7.00
240.0	219.5	8.1	PSV402400	215.27 x 7.00
250.0	**229.5**	**8.1**	**PSV402500**	**227.97 x 7.00**
250.0	**226.0**	**8.1**	**PSV802500**	**227.97 x 7.00**
260.0	236.0	8.1	PSV802600	227.97 x 7.00

Bore Dia.	Groove Dia.	Groove Width	TSS Part No.	O-Ring Dimensions
D_N f8/h9	**d1** H9	**L1** +0.2		
270.0	246.0	8.1	PSV802700	240.67 x 7.00
280.0	256.0	8.1	PSV802800	253.37 x 7.00
300.0	276.0	8.1	PSV803000	266.07 x 7.00
306.0	285.5	8.1	PSV403060	278.77 x 7.00
310.0	286.0	8.1	PSV803100	278.77 x 7.00
320.0	**299.5**	**8.1**	**PSV403200**	**291.47 x 7.00**
320.0	**296.0**	**8.1**	**PSV803200**	**291.47 x 7.00**
330.0	306.0	8.1	PSV803300	304.17 x 7.00
340.0	316.0	8.1	PSV803400	316.87 x 7.00
345.0	324.5	8.1	PSV403450	316.87 x 7.00
350.0	326.0	8.1	PSV803500	316.87 x 7.00
360.0	336.0	8.1	PSV803600	329.57 x 7.00
370.0	346.0	8.1	PSV803700	342.27 x 7.00
380.0	356.0	8.1	PSV803800	354.97 x 7.00
400.0	**376.0**	**8.1**	**PSV804000**	**367.67 x 7.00**
420.0	396.0	8.1	PSV804200	393.07 x 7.00
430.0	406.0	8.1	PSV804300	405.26 x 7.00
440.0	416.0	8.1	PSV804400	405.26 x 7.00
450.0	426.0	8.1	PSV804500	417.96 x 7.00
480.0	456.0	8.1	PSV804800	456.06 x 7.00
500.0	**476.0**	**8.1**	**PSV805000**	**468.76 x 7.00**
520.0	499.5	8.1	PSV405200	494.16 x 7.00
540.0	516.0	8.1	PSV805400	506.86 x 7.00
600.0	576.0	8.1	PSV806000	557.66 x 7.00
650.0	626.0	8.1	PSV806500	608.08 x 7.00
700.0	672.7	9.5	PSV507000	670 x 8.40
780.0	752.7	9.5	PSV507800	750 x 8.40
800.0	772.7	9.5	PSV508000	770 x 8.40
820.0	792.7	9.5	PSV508200	790 x 8.40
860.0	832.7	9.5	PSV508600	830 x 8.40
900.0	872.7	9.5	PSV509000	870 x 8.40
920.0	892.7	9.5	PSV509200	890 x 8.40
1000.0	972.7	9.5	PSV5X1000	970 x 8.40
1000.0	962.0	13.8	PSV6X1000	960 x 12.00
1200.0	1172.7	9.5	PSV5X1200	1170 x 8.40
1200.0	1162.0	13.8	PSV6X1200	1160 x 12.00

Bore Dia.	Groove Dia.	Groove Width	TSS Part No.	O-Ring Dimensions
D_N f8/h9	**d1** H9	**L1** +0.2		
1500.0	1462.0	13.8	PSV6X1500	1460 x 12.00
2000.0	1962.0	13.8	PSV6X2000	1960 x 12.00
2650.0	2612.0	13.8	PSV6X2650	2610 x 12.00

The bore diameters in bold type comply with the recommendations of ISO 3320.
Other dimensions and all intermediate sizes up to 2700 mm diameter including imperial (inch) sizes can be supplied.
All O-Rings with 12 mm cross section are delivered as special Profilering.

Turcon® Double Delta®

Double Acting

Rubber Energized Plastic Faced Seal

For O-Ring Grooves

Material:
Turcon®, Zurcon® and Elastomer

■ Turcon® Double Delta®

Description

Turcon® Double Delta® is a rubber energised plastic faced seal. The seal is designed to expand and improve the service parameters of O-Rings and is installed in existing O-Ring grooves.

Double Delta® combines the flexibility and response of O-Rings with the wear and friction characteristics of the Turcon® materials in dynamic applications.

The figure below shows the cross section of the Double Delta®.

The double acting performance of the seal follows from the symmetrical cross section which allow the seal to respond to pressure in both directions.

Initial contact pressure is provided by radial compression of the O-Ring. When the system pressure is increased the O-Ring transforms this into additional contact pressure, the contact pressure of the seal is thereby automatically adjusted so sealing is ensured under all service conditions.

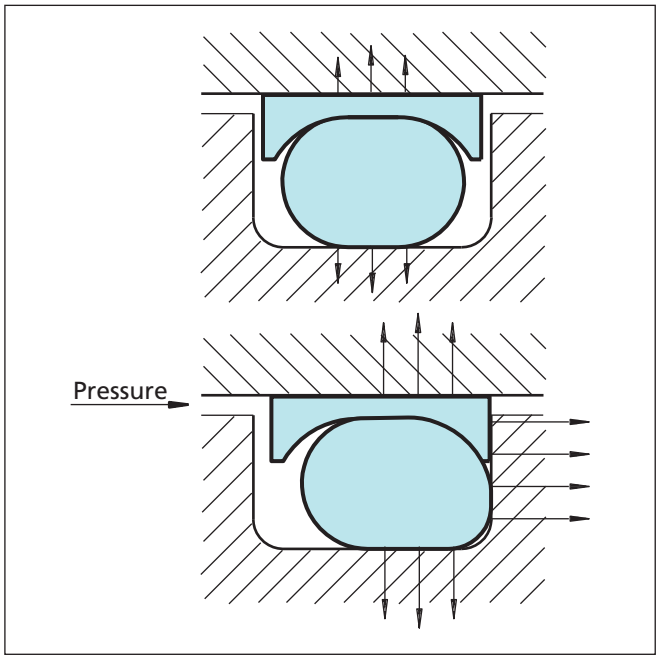

Figure 32 Turcon® Double Delta® without and with pressure

Notches

Turcon® Double Delta® is as standard supplied without radial notches, as the thin radial section of the seal gives good response to pressure variations.

For diameters from 8 mm notches on both sides are optional. These ensure direct pressurizing of the seal under all operating conditions.

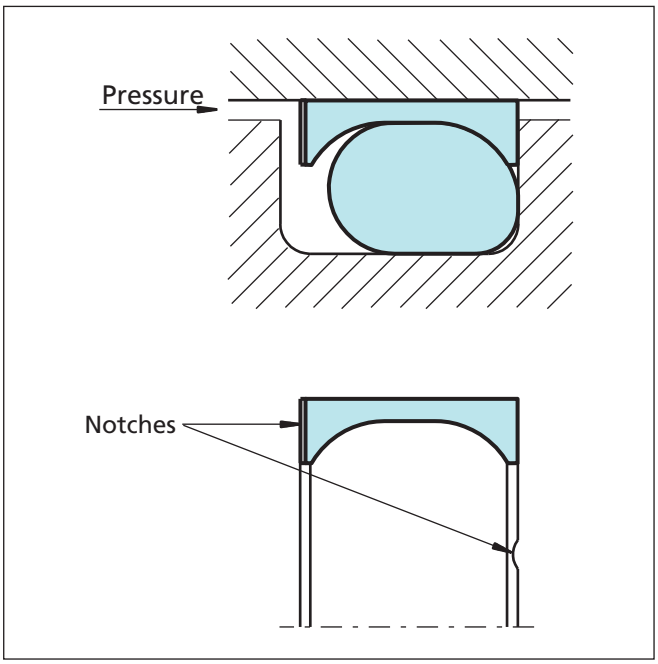

Figure 33 Turcon® Double Delta® with notches

Advantages

- Compact groove dimensions and simple installation
- Low friction without stick-slip
- Resistance against wear and extrusion
- Piston seals available for all diameters from 5 to 999.9 mm
- Standard cross sections cover AS 568A and important metric O-Rings, other cross sections available on request.
- Fits also groove dimensions per MIL-G-5514F

Application Examples

The Turcon® Double Delta® is the recommended sealing element for double acting pistons of hydraulic or pneumatic cylinders in sectors such as:

- Machine tools
- Handling devices
- Manipulators
- Valves
- Chemical process equipment

It is particular recommended for light duty and small diameter applications.

Technical Data

Operating conditions

Pressure:	Up to 35 MPa
Velocity:	Up to 15 m/s
Temperature:	-45 °C to +200 °C *) (according to O-Ring material)
Media:	Mineral oil-based hydraulic fluids, flame retardant hydraulic fluids, environmentally safe hydraulic fluids (bio-oils), phosphate ester, water and others, depending on the seal and O-Ring material compatibility (see Table XXXV)
Clearance:	The maximum permissible radial clearance Smax is shown in Table XXXVI, as a function of the operating pressure and functional diameter

Important Note:
The above data are maximum values and cannot be used at the same time. e.g. the maximum operating speed depends on material type, pressure, temperature and gap value.
Temperature range also dependent on medium.

*) In the case of unpressurized applications in temperatures below 0°C please contact our application engineers for assistance!

■ Materials

The following material combinations have proven effective for hydraulic applications:

All round material for hydraulic applications with reciprocating. short stroke or helical movements in mineral oils, flame retardant hydraulic fluids HFC, phosphate ester, bio-oils or fluids having less satisfactory lubricating properties:

Turcon® Double Delta ®:	Turcon® M12	
O-Ring:	NBR, 70 Shore A	N
	FKM, 70 Shore A	V
	EPDM, 70 Shore	E
Set code:	M12N, M12V or M12E	

For medium to heavy applications with reciprocating movements in mineral oils and other media with good lubrication:

Turcon® Double Delta®:	Turcon® T46	
O-Ring:	NBR, 70 Shore A	N
	FKM, 70 Shore A	V
Set code:	T46N or T46V	

For specific applications, all Turcon® materials are available.

Other viable material combinations are listed in Table XXXV.

■ Design Instructions

Lead-in Chamfers

In order to avoid damage to the seal during installation, lead-in chamfers and rounded edges must be provided on the bore or piston rod (Figure 34).

The minimum length of the lead-in chamfer depends on the profile size of the seal and can be seen from the following tables.

Table XXXIV Lead-in Chamfers

Lead-in Chamfer** Diameter increase ΔD_N min.	O-Ring Cross Section*** d_2
1.4	1.78 - 2.00
1.8	2.40 - 2.62
2.4	3.00 - 4.00
3.2	5.00 - 5.70
4.0	7.00 - 8.40

** Though not less than 1.5 % of service diameter (bore/piston diameter).

*** The O-Ring cross section d_2 can be found in the appropriate tables "Installation dimensions", Table XXXVI , Table XXXVIII and Table XXXIX.

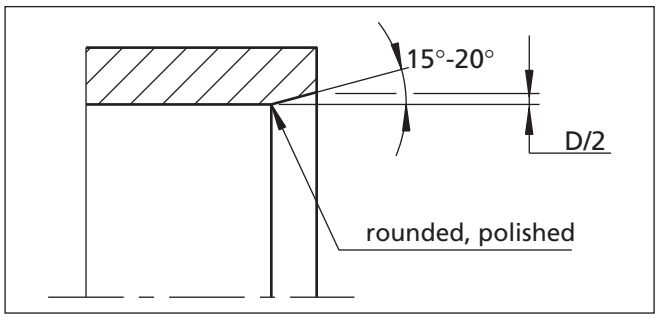

Figure 34 Lead-in chamfers

■ Materials

Table XXXV Turcon® and Zurcon® Materials for Double Delta®

Material, Applications, Properties	Code	O-Ring Material Shore A	Code	O-Ring Operating Temp.* °C	Mating Surface Material	MPa max. Dynamic
Turcon® M12 **First material choice** for seals in linear motion Overall improved properties For new constructions and updating For all commonly applied hydraulic fluids including fluids with low lubrication performance Lowest friction and best sliding properties Lowest wear on seals Improved absorption of abrasive contaminants No wear or abrasion of counter surface Mineral fibre and Additives filled Colour: Dark grey	M12	NBR - 70	N	-30 to +100	Steel Steel hardened Steel chrome plated (rod) Steel plated (rod) Cast iron Stainless steel Titanium	35
		NBR - 70 Low temp.	T	-45 to +80		
		FKM - 70	V	-10 to +20		
Turcon® T05 For lubricating fluids Also for gas service Very low friction Very good sliding and sealing properties Colour: Turquoise	T05	NBR - 70	N	-30 to +100	Steel Steel hardened Steel chrome plated (rod)	20
		NBR - 70 Low temp.	T	-45 to +80		
		FKM - 70	V	-10 to +200		
Turcon® T24 For lubricating and non-lubricating hydraulic fluids Good sealing function Moderate extrusion resistance Carbon filled Colour: Black	T24	NBR - 70	N	-30 to +100	Steel Steel hardened Steel chrome plated (rod) Cast iron Stainless steel Aluminium	20
		NBR - 70 Low temp.	T	-45 to +80		
		FKM - 70	V	-10 to +200		
		EPDM - 70	E**	-45 to +145		
Turcon® T46 For lubricated hydraulics in linear motion High compressive strength High extrusion resistance Very good sliding and wear properties BAM tested Bronze filled Colour: light to dark brown, which may have variations in shading	T46	NBR - 70	N	-30 to +100	Steel hardened Steel chrome plated (rod) Cast iron	35
		NBR - 70 Low temp.	T	-45 to +80		
		FKM - 70	V	-10 to +200		
Zurcon® Z80 For lubricating and non-lubricating fluids Water based fluids, air and gases Dry air pneumatics High abrasion and extrusion resistance For service in abrasive conditions and media with particles Good chemical resistance Limited temperature capability (-60 to +80 °C) UHMWPE (Ultra High Molecular Weight PE) Colour: White to off-white	Z80	NBR - 70	N	-30 to (+100)	Steel Steel hardened Steel chrome plated (rod) Stainless steel Aluminium Ceramic coating	30
		NBR - 70 Low temp.	T	-45 to +80		
		EPDM - 70	E**	-10 to (+145)		

* The O-Ring Operation Temperature is only valid in mineral hydraulic oil. ** Material not suitable for mineral oils.
BAM: Tested by "Bundesanstalt Materialprüfung, Germany". ▭ Highlighted materials are standard.

■ Installation Recommendation

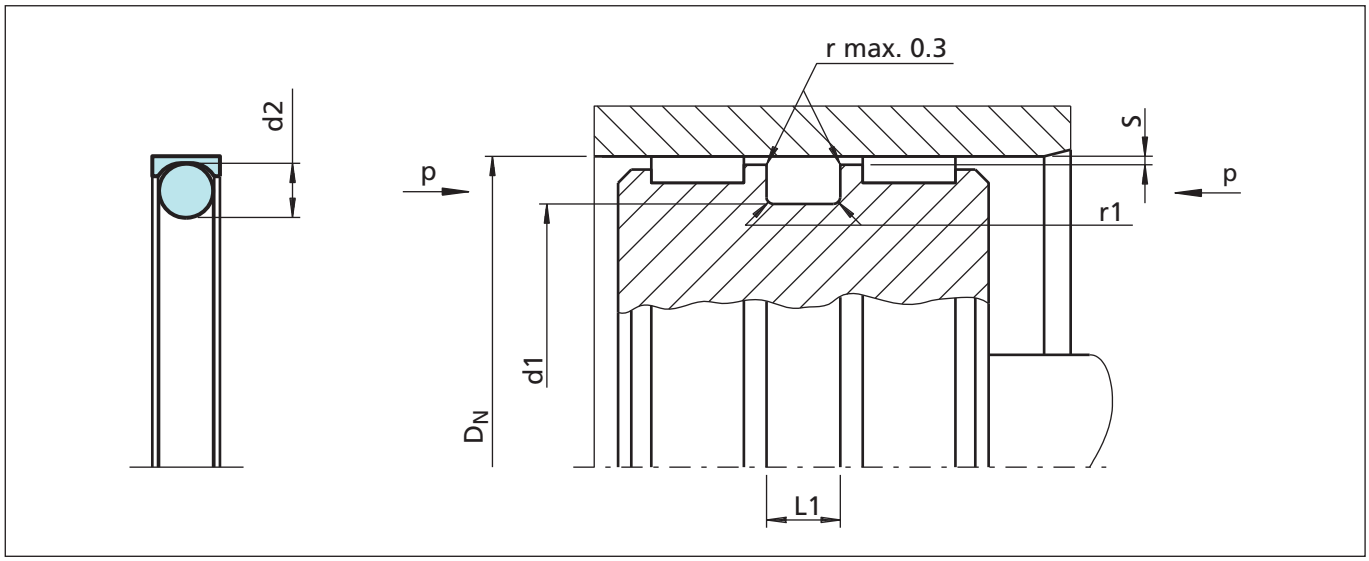

Figure 35 Installation drawing

Table XXXVI Installation dimensions

Series No.	Bore Diameter D_N H9		Groove Diameter	Groove Width	Radius	Radial Clearance S max. *				O-Ring Cross-Sec.
	Standard Range	Extended Range	d_1 h9	L_1 +0.2	r_1	2 MPa	10 MPa	20 MPa	35 MPa	d_2
PDD0	5 - 13.9	5 - 139.9	D_N - 2.9	2.4	0.4	0.10	0.10	0.08	0.05	1.78
PDD1	14 - 24.9	8 - 259.9	D_N - 4.5	3.6	0.4	0.15	0.15	0.10	0.07	2.62
PDD2	25 - 45.9	12 - 469.9	D_N - 6.2	4.8	0.6	0.25	0.20	0.15	0.08	3.53
PDD3	46 - 124.9	20 - 669.9	D_N - 9.4	7.1	0.8	0.35	0.25	0.20	0.10	5.33
PDD4	125 - 669.9	80 - 999.9	D_N - 12.2	9.5	0.8	0.50	0.30	0.25	0.15	7.00
PDD5	670 - 999.9	125 - 999.9	D_N - 15.0	10.0	1.0	0.60	0.40	0.30	0.20	8.40

* TSS Slydring® / Wear Rings are not applicable at very small radical clearance S. Please consult the Slydring® catalog.

Ordering example

Turcon® Double Delta®, complete with O-Ring, standard range, series PDD3 (from Table XXXVI).
Bore diameter: D_N = 80.0 mm
TSS Part No.: PDD300800 (from Table XXXVII)

Select the material from Table XXXV. The corresponding code numbers are appended to the TSS Part No. (from Table XXXVII). Together they form the TSS Article No.
For all intermediate sizes not shown in Table XXXVII, the TSS Article No. can be determined from the example opposite.

** "N" for seals with notches. Available for diameters from 8.0 mm.

For seals for other groove widths/Dimensions please refer to Table XXXVIII and Table XXXIX.

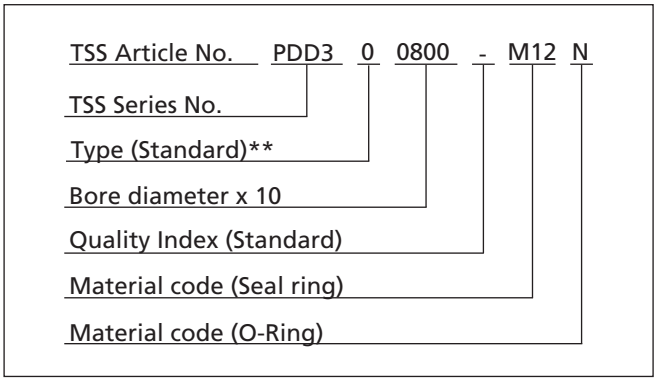

Table XXXVII Installation dimensions / TSS Part No.

Bore Diameter D_N H9	Groove Diameter d_1 h9	Groove Width L_1 +0.2	TSS Part No.	O-Ring Sizes
6.0	3.1	2.4	PDD000060	2.57 x 1.78
8.0	**5.1**	**2.4**	**PDD000080**	**4.47 x 1.78**
9.0	6.1	2.4	PDD000090	5.28 x 1.78
10.0	**7.1**	**2.4**	**PDD000100**	**6.07 x 1.78**
11.0	8.1	2.4	PDD000110	7.65 x 1.78
12.0	**9.1**	**2.4**	**PDD000120**	**8.5 x 1.8**
12.7	9.8	2.4	PDD000127	9.25 x 1.78
14.0	9.5	3.6	PDD100140	9.19 x 2.62
15.0	10.5	3.6	PDD100150	9.19 x 2.62
16.0	**11.5**	3.6	**PDD100160**	**10.77 x 2.62**
18.0	13.5	3.6	PDD100180	12.37 x 2.62
20.0	**15.5**	3.6	**PDD100200**	**13.94 x 2.62**
22.0	17.5	3.6	PDD100220	17.12 x 2.62
24.0	19.5	3.6	PDD100240	18.72 x 2.62
25.0	**18.8**	4.8	**PDD200250**	**18 x 3.55**
25.4	19.2	4.8	PDD200254	18.54 x 3.53
27.0	20.8	4.8	PDD200270	20.22 x 3.53
28.0	21.8	4.8	PDD200280	20.22 x 3.53
30.0	23.8	4.8	PDD200300	23.40 x 3.53
32.0	**25.8**	**4.8**	**PDD200320**	**25.00 x 3.53**
35.0	28.8	4.8	PDD200350	28.17 x 3.53
40.0	**33.8**	**4.8**	**PDD200400**	**32.92 x 3.53**
42.0	35.8	4.8	PDD200420	34.52 x 3.53
45.0	38.8	4.8	PDD200450	37.70 x 3.53
48.0	38.6	7.1	PDD300480	37.47 x 5.33
50.0	**40.6**	**7.1**	**PDD300500**	**40.0 x 5.30**
50.8	41.4	7.1	PDD300508	40.64 x 5.33
52.0	42.6	7.1	PDD300520	40.64 x 5.33
55.0	45.6	7.1	PDD300550	43.82 x 5.33
56.0	46.6	7.1	PDD300560	43.82 x 5.33
60.0	50.6	7.1	PDD300600	50.17 x 5.33
63.0	**53.6**	**7.1**	**PDD300630**	**53.34 x 5.33**
65.0	55.6	7.1	PDD300650	53.34 x 5.33
70.0	60.6	7.1	PDD300700	59.69 x 5.33
75.0	65.6	7.1	PDD300750	62.87 x 5.33
80.0	**70.6**	**7.1**	**PDD300800**	**69.22 x 5.33**

Bore Diameter D_N H9	Groove Diameter d_1 h9	Groove Width L_1 +0.2	TSS Part No.	O-Ring Sizes
85.0	75.6	7.1	PDD300850	72.39 x 5.33
90.0	80.6	7.1	PDD300900	78.74 x 5.33
95.0	85.6	7.1	PDD300950	81.92 x 5.33
100.0	**90.6**	**7.1**	**PDD301000**	**88.27 x 5.33**
110.0	100.6	7.1	PDD301100	97.79 x 5.33
115.0	105.6	7.1	PDD301150	104.14 x 5.33
120.0	110.6	7.1	PDD301200	107.32 x 5.33
125.0	**112.8**	**9.5**	**PDD401250**	**113.67 x 7.0**
130.0	117.8	9.5	PDD401300	116.84 x 7.0
135.0	122.8	9.5	PDD401350	120.02 x 7.0
140.0	127.8	9.5	PDD401400	126.37 x 7.0
150.0	137.8	9.5	PDD401500	135.89 x 7.0
160.0	**147.8**	**9.5**	**PDD401600**	**145.42 x 7.0**
170.0	157.8	9.5	PDD401700	151.77 x 7.0
180.0	167.8	9.5	PDD401800	164.47 x 7.0
190.0	177.8	9.5	PDD401900	177.17 x 7.0
200.0	**187.8**	**9.5**	**PDD402000**	**183.52 x 7.0**
210.0	197.8	9.5	PDD402100	196.22 x 7.0
220.0	207.8	9.5	PDD402200	202.57 x 7.0
230.0	217.8	9.5	PDD402300	215.27 x 7.0
240.0	227.8	9.5	PDD402400	227.97 x 7.0
250.0	**237.8**	**9.5**	**PDD402500**	**236.0 x 7.0**
280.0	267.8	9.5	PDD402800	266.07 x 7.0
300.0	287.8	9.5	PDD403000	278.77 x 7.0
320.0	**307.8**	9.5	**PDD403200**	**304.17 x 7.0**
350.0	337.8	9.5	PDD403500	329.57 x 7.0
400.0	**387.8**	**9.5**	**PDD404000**	**380.37 x 7.0**
420.0	407.8	9.5	PDD404200	405.26 x 7.0
450.0	437.8	9.5	PDD404500	430.66 x 7.0
480.0	467.8	9.5	PDD404800	456.06 x 7.0
500.0	**487.8**	**9.5**	**PDD405000**	**481.46 x 7.0**
600.0	587.5	9.5	PDD406000	582.68 x 7.0
650.0	637.5	9.5	PDD406500	633.48 x 7.0

The bore diameters in **bold** type comply with the recommendations of ISO 3320.
TSS Part No. for other dimensions and **all** intermediate dimensions up to 999.9 mm diameter including imperial (inch) dimensions can be supplied. Larger dimensions up to 2700 mm available upon request.

■ Special Turcon® Double Delta®

Turcon® Double Delta® for one Back-up Ring grooves

Double Delta® is available for designs where grooves for O-Ring with one Back-up Ring are used according to Table XXXVIII.

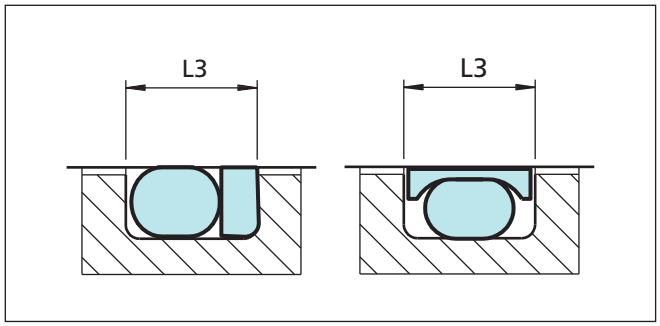

Figure 36 Groove width

Table XXXVIII Seals for one Back-up Ring groove

Series No.	Groove Width	Execution Mark 5th digit		O-Ring Cross Section
	L_3	Without Notch	With Notch*	d_2
PDA0	3.80	0	N	1.78
PDA1	4.65	0	N	2.62
PDA2	5.70	0	N	3.53
PDA3	8.50	0	N	5.33
PDA4	11.20	0	N	7.00
PDA5	12.50	0	N	8.40

* Available for diameters from 8 mm

Ordering example

Double Delta® complete with NBR O-Ring
Bore diameter: D_N = 80 mm
Groove diameter: 70.6 mm
Groove width: 8.5 mm.
TSS Article No.: PDA300800-M12N

* From Table XXXVIII or Table XXXIX
** From Table XXXV
*** From Table XXXV

TSS Article No. PDA3 0 0800 - M12 N

- TSS Series No.*
- Type (Standard)[1)]
- Bore diameter x 10
- Quality Index (Standard)
- Material code (Seal ring)**
- Material code (O-Ring)***

[1)] N for seals with notches, available from dia. 8 mm

Turcon® Double Delta® for metric O-Rings

Double Delta® is available for installation in grooves for metric O-Rings as listed in Table XXXIX.

Table XXXIX Piston Seals for Metric O-Ring Grooves

O-Ring Cross-Section	Groove Diameter	Groove Width	Series No.	Execution Mark 5th digit		Available Range
d_2	d_1 h9	L_1 +0.2		Standard	Notch*	
2.0	D_N - 3.3	2.7	PD2A	0	N	6 - 100.0
2.4	D_N - 4.1	3.2	PD2E	0	N	8 - 160.0
2.5	D_N - 4.3	3.3	PD2F	0	N	8 - 160.0
3.0	D_N - 5.2	4.0	PD3A	0	N	12 - 200.0
4.0	D_N - 7.0	5.2	PD4A	0	N	16 - 300.0
5.0	D_N - 8.8	6.6	PD5A	0	N	20 - 400.0
5.7	D_N - 10.0	7.2	PD5H	0	N	20 - 669.9

* Available for diameters from 8 mm

Turcon® Variseal® M2

Single Acting

Spring Energized Plastic U-Cup

Material:
Turcon® and Zurcon®

■ Turcon® Variseal® M2

Description

The Turcon® Variseal® M2 is a single-acting seal consisting of a U-shaped seal jacket and a V-shaped corrosion resistant spring.

Variseal® M2 has an asymmetric seal profile. The heavy profile of its dynamic lip with an optimized front angle offers good leakage control, reduced friction and long service life.

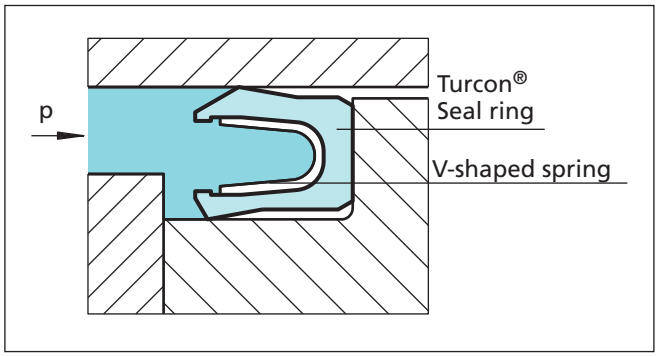

Figure 37 Turcon® Variseal® M2

At low and zero pressure, the metal spring provides the primary sealing force. As the system pressure increases, the main sealing force is achieved by the system pressure and ensures a tight seal from zero to high pressure.

The possibility of matching suitable materials for the seal and the spring allows use in a wide range of applications going beyond the field of hydraulics, e.g. in the chemical, pharmaceutical and foodstuffs industry.

The Variseal® M2 can be sterilized and is available in a special Hi-Clean version where the spring cavity is filled with a Silicone gel preventing contaminants from being entrapped in the seal. This design also works well in applications involving mud, slurries or adhesives to keep grit from packing into the seal cavity and inhibiting the spring action.

For applications with highly viscous media, please contact our Technical department.

Variseal® M2 seals can be installed in grooves to AS4716 and ISO 3771. The seal can only be installed to a limited extent in closed grooves. Installation instructions, see Table VIII.

Advantages

- Resistant to most fluids and chemicals
- Low coefficients of friction
- Stick-slip free operating for precise control
- High abrasion resistance and dimensional stability
- Can handle rapid changes in temperature
- No contamination in contact with foodstuffs, pharmaceutical and medicinal fluids
- Sterilisable
- Unlimited shelf life

Application Examples

The Turcon® Variseal® M2 is the recommended sealing element for all applications requiring stick-slip free operation as well as chemical resistance against almost all media such as:

- Valves
- Pumps
- Separators
- Actuators
- Dosing devices

It requires a mating surface of high quality to avoid high wear rates.

Technical Data

Operating conditions

Pressure:	For static loads: 40 MPa (400 Bar) For dynamic loads: 20 MPa (200 Bar)
Speed:	Reciprocating up to 15 m/s Rotating up to 1 m/s
Temperature:	-70 °C to +260 °C For specific applications beyond indicated range, please enquire
Media:	Virtually all fluids, chemicals and gases

Important Note:
The above data are maximum values, when using standard materials and geometries, and cannot be used at the same time. e.g. the maximum operating speed depends on material type, pressure, temperature and gap value. Temperature range also dependent on medium.

Materials

All materials used are physiologically safe. They contain no odour or taste-affecting substances.

The following material combination has proved effective for most fluid applications:

Seal ring: Turcon® T 40
Spring: Stainless steel, Material No. AISI 301
Material code S

For gas applications use:

Seal ring: T05 or Z80

For use in accordance with the demands of the "Food and Drug Administration", suitable materials are available on request.

Table XL Turcon® and Zurcon® Materials for Variseal® M2

Material, Applications, Properties	Code	Spring Material	Code	Operating Temp.* °C	Mating Surface Material	MPa max.
Turcon® T40 For all lubricating and non-lubricating hydraulic fluids, hydraulic oils without zinc, **water hydraulic, hard mating surfaces.** Surface texture not suitable for gases. Carbon fibre filled Colour: Grey	T40	AISI 301	S	-70 to +260	Steel, hardened Steel, chromeplated	40
Turcon® T05 For all lubricating hydraulic fluids, soft mating surfaces, **very good sliding properties, low friction.** Colour: Turquoise	T05	AISI 301	S	-70 to +260	Steel Steel, chromeplated Cast iron Stainless steel Aluminium Bronze Alloys	20
Zurcon® Z80 For lubricating and non-lubricating hydraulic fluids, high abrasion resistance, very good chemical resistance, limited temperature resistance. **FDA compliance.** Ultra high molecular weight polyethylen Colour: White to off-white	Z80	AISI 301	S	-70 to +80	Steel Steel, chromeplated Stainless steel Aluminium Bronze Ceramic coating	40
Zurcon® Z48 For tight sealing with long wear life, in applications without high temperatures or corrosive chemicals. Colour: Black	Z48	AISI 301	S	-60 to +130	Steel Steel, chromeplated Cast iron Stainless steel Aluminium Bronze Alloys Ceramic coating	40

* Depending on media. Highlighted material is standard.

Installation of Spring Energised Seals

See page 13

■ Installation Recommendation

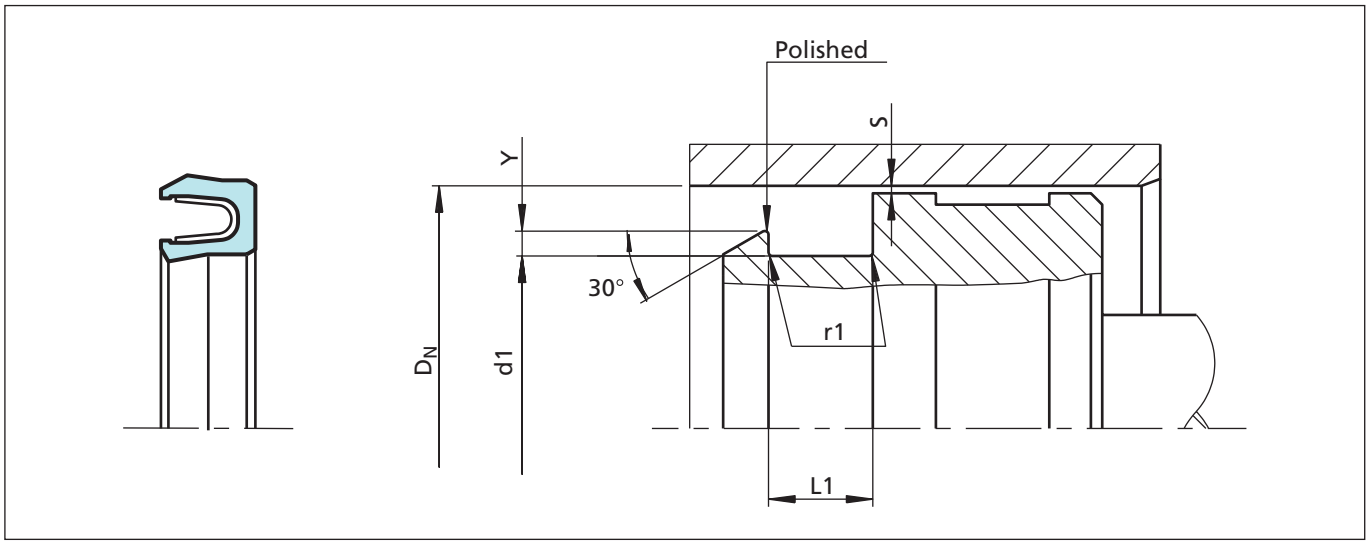

Figure 38 Installation drawing

Table XLI Installation dimensions

Series No.	Bore Diameter D_N H9		Groove Diameter	Groove Width	Radius	Step[2] Height	Radial Clearance S max.*			
	Standard Range	Extended[1] Range	d_1 h9	L_1 +0.2	r_1	Y min.	<2 MPa	<10 MPa	<20 MPa	<40 MPa
PVA0	6.0 - 13.9	6.0 - 40.0	D_N - 2.9	2.4	0.4	0.4	0.20	0.10	0.08	0.05
PVA1	14.0 - 24.9	10.0 - 200.0	D_N - 4.5	3.6	0.4	0.6	0.25	0.15	0.10	0.07
PVA2	25.0 - 45.9	16.0 - 400.0	D_N - 6.2	4.8	0.6	0.7	0.35	0.20	0.15	0.08
PVA3	46.0 - 124.9	28.0 - 700.0	D_N - 9.4	7.1	0.8	0.8	0.50	0.25	0.20	0.10
PVA4	125.0 - 999.9	45.0 - 999.9	D_N - 12.2	9.5	0.8	0.9	0.60	0.30	0.25	0.12
PVA5	1000.0 - 2500.0	100.0 - 2500.0	D_N - 19.0	15.0	0.8	0.9	0.90	0.50	0.40	0.20

* At pressures **> 40 MPa** use diameter tolerance H8/f8 (bore/piston) in area of the seal. [1] Available on request. [2] Ymax = 0.035 x D_N

Ordering example

Turcon® Variseal®M2, standard range, Series PVA3 (from Table XLI).
Bore diameter: D_N = 80.0 mm
TSS Part No.: PVA300800 (from Table XLII)

Select the material from Table XL. The corresponding code numbers are appended to the TSS Part No. (from Table XLII). Together they form the TSS Article No.
For all intermediate sizes not shown in Table XLII, the TSS Article No. can be determined from the example opposite.

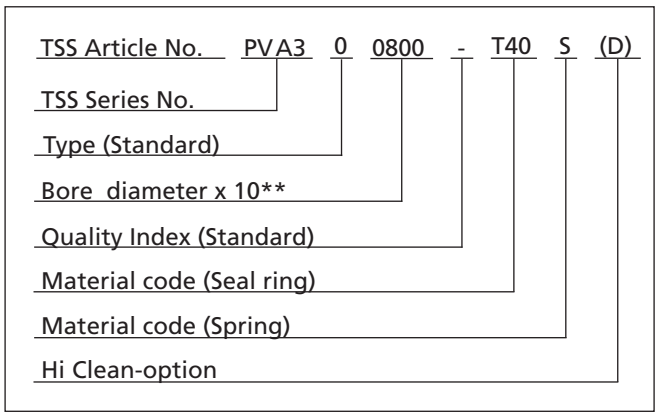

** For diameters ≥ 1000.0 mm multiply only by factor 1.
Example: PVA5 for diameter 1200.0 mm.
TSS Article No.: PVA5**X1200** - T40S.

Table XLII Installation dimensions / TSS Part No.

Bore Diameter	Groove Diameter	Groove Width	TSS Part No.
D_N H9	d_1 h9	L_1 +0.2	
6.0	3.1	2.4	PVA000060
8.0	**5.1**	**2.4**	**PVA000080**
10.0	**7.1**	**2.4**	**PVA000100**
12.0	**9.1**	**2.4**	**PVA000120**
14.0	9.5	3.6	PVA100140
15.0	10.5	3.6	PVA100150
16.0	**11.5**	**3.6**	**PVA100160**
18.0	13.5	3.6	PVA100180
20.0	**15.5**	**3.6**	**PVA100200**
22.0	17.5	3.6	PVA100220
25.0	**18.8**	**4.8**	**PVA200250**
28.0	21.8	4.8	PVA200280
30.0	23.8	4.8	PVA200300
32.0	**25.8**	**4.8**	**PVA200320**
35.0	28.8	4.8	PVA200350
40.0	**33.8**	**4.8**	**PVA200400**
42.0	35.8	4.8	PVA200420
45.0	38.8	4.8	PVA200450
48.0	38.6	7.1	PVA300480
50.0	**40.6**	**7.1**	**PVA300500**
52.0	42.6	7.1	PVA300520
55.0	45.6	7.1	PVA300550
56.0	46.6	7.1	PVA300560
60.0	50.6	7.1	PVA300600

Bore Diameter	Groove Diameter	Groove Width	TSS Part No.
D_N H9	d_1 h9	L_1 +0.2	
63.0	**53.6**	**7.1**	**PVA300630**
65.0	55.6	7.1	PVA300650
70.0	60.6	7.1	PVA300700
75.0	65.6	7.1	PVA300750
80.0	**70.6**	**7.1**	**PVA300800**
85.0	75.6	7.1	PVA300850
90.0	80.6	7.1	PVA300900
95.0	85.6	7.1	PVA300950
100.0	**90.6**	**7.1**	**PVA301000**
110.0	100.6	7.1	PVA301100
115.0	105.6	7.1	PVA301150
120.0	110.6	7.1	PVA301200
125.0	**112.8**	**9.5**	**PVA401250**
130.0	117.8	9.5	PVA401300
135.0	122.8	9.5	PVA401350
140.0	127.8	9.5	PVA401400
150.0	137.8	9.5	PVA401500
160.0	**147.8**	**9.5**	**PVA401600**
170.0	157.8	9.5	PVA401700
180.0	167.8	9.5	PVA401800
190.0	177.8	9.5	PVA401900
200.0	**187.8**	**9.5**	**PVA402000**
210.0	197.8	9.5	PVA402100
220.0	207.8	9.5	PVA402200

Bore Diameter	Groove Diameter	Groove Width	TSS Part No.
D_N H9	d_1 h9	L_1 +0.2	
230.0	217.8	9.5	PVA402300
240.0	227.8	9.5	PVA402400
250.0	**237.8**	**9.5**	**PVA402500**
280.0	267.8	9.5	PVA402800
300.0	287.8	9.5	PVA403000
320.0	**307.8**	**9.5**	**PVA403200**
350.0	337.8	9.5	PVA403500
400.0	**387.8**	**9.5**	**PVA404000**
420.0	407.8	9.5	PVA404200
450.0	437.8	9.5	PVA404500
480.0	467.8	9.5	PVA404800
500.0	**487.8**	**9.5**	**PVA405000**

The bore diameters in **bold** type comply with the recommendations of ISO 3320.
Other dimensions and all intermediate sizes up to 2.700 mm diameter including imperial (inch) sizes can be supplied.

Turcon® VL Seal®

Single Acting

Rubber Energized Plastic Faced Seal

Material:
Turcon®, Zurcon® and Elastomer

Description

Turcon® VL Seal® is a new generation unidirectional Rod seal for the same groove dimensions as standard O-Rings, see Figure 39.

The design has taken the latest empirical and theoretical experience into account in order to optimise performance, friction, leakage and service life. This has been achieved through FEA simulation, in-house testing and qualification in customer applications.

The VL Seal® has no static lip, instead static sealing is effectively provided by the O-Ring. The O-Ring is protected from damage under pressure cycles by the concave seal back which supports the O-Ring and keeps it in position also at high working pressure.

The VL Seal® is designed with hydrodynamic back-pumping effect, which allows the seal to relieve pressure trapped between seals in tandem configuration.

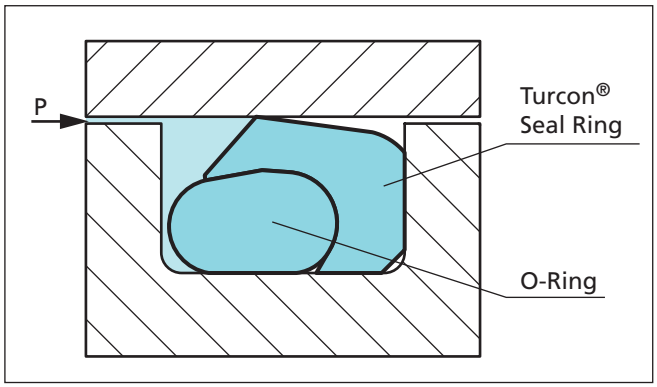

Figure 39 Turcon® VL Seal® mounted in O-Ring groove

Method of operation

The sealing mechanism of the Turcon® VL Seal® is based on the hydrodynamic properties of the seal. The specially formed seal edge has a steep contact pressure gradient on the high pressure side and a shallow contact pressure gradient on the low pressure side. This ensures that the fluid film adhering to the piston rod is returned to the high pressure chamber on the return stroke of the rod. This prevents the micro-fluid layer, which is carried out of the high pressure chamber when the piston rod is extended, from causing leaks.

This return delivery property prevents the build-up of inter-seas pressure normally associated with tandem seal configurations. Inter-seal pressure depends on the system pressure, speed, stroke length and groove design.

Advantages

- Groove design with shallow radial depth
- Tight leakage control
- Low friction with small contact area between seal and counter surface
- Featuring the Turcon® Stepseal® 2K back pumping effect
- Utilize standard O-Ring installation groove
- Available in all diameter sizes from 10 to 2700 mm

Application Examples

The VL Seal® is recommended for hydraulics and general machine construction as an alternative to Turcon® Stepseal® 2K and other single acting seals according to their individual advantages.

- Machine tools
- Automation
- Handling devises
- Single acting cylinders
- Automobile industry
- Servo hydraulics
- Down-hole tools
- O-Ring replacement

Technical Data

Operating conditions:

Pressure:	Up to 60 MPa
Speed:	Up to 15 m/s for Turcon® materials with reciprocating movements frequency up to 5 Hz
Temperature:	-45 °C to +200 °C (depending on seal and O-Ring material)
Media:	Mineral oil-based hydraulic fluids, flame retardant hydraulic fluids, environmentally safe hydraulic, fluids (bio-oils), phosphate ester, water and others, depending on the seal and O-Ring material compatibility (see Table XLIII)
Clearance:	The maximum permissible radial clearance S_{max} is shown in Table XLIV, as a function of the operating pressure and functional diameter.

Important Note:
The above data are maximum values and cannot be used at the same time, e. g. the maximum operating speed depends on material type, pressure, temperature and gap value.

Important Note for the piston version:
In the case of unpressurized applications in temperatures below 0°C please contact our application engineers for assistance!

Materials

The following material combinations have proven effective for hydraulic applications:

All round material for hydraulic applications with reciprocating, short stroke or helical movements in mineral oils, flame retardant hydraulic fluids HFC, phosphate ester, bio-oils or fluids having less satisfactory lubricating properties:

Turcon® VL Seal®:	Turcon® M12	
O-Ring:	NBR, 70 Shore A	N
	FKM, 70 Shore A	V
Set code:	M12N or M12V	

For medium to heavy applications with reciprocating movements in mineral oils and other media with good lubrication:

Turcon® VL Seal®:	Turcon® T46	
O-Ring:	NBR, 70 Shore A	N
	FKM, 70 Shore A	V
Set code:	T46N or T46V	

Zurcon® Z52 is recommended for VL Seal® as alternative to polyurethane U-Cups especially outside the size range of these products.

For specific applications, all Turcon® materials are available.

Other viable material combinations are listed in Table XLIII.

Installation dimensions

The VL Seal® is dimensionally interchangeable with seals for O-Ring housings, like Vectorseal™, Double Delta® and Turcon® Variseal® M2. Groove dimensions, radial clearances and recommended seal series in relation to diameter are as illustrated in Table XLIV.

VL Seal® is preferably installed in closed grooves according to Figure 10 page 13. Depending on type and size installation in split grooves is also possible. Recommended minimum diameters for installation in closed grooves, see Table VI page 13.

Radial Notch

Turcon® VL Seal® can be delivered with radial notches at the "back side" (low pressure side).

This is an advantage if the seal is used in rotary applications. The notches can prevent the seal from rotating in the groove by avoiding pressurised fluid being trapped between seal and groove corner.

Table XLIII Turcon® and Zurcon® Materials for VL Seal®

Material, Applications, Properties	Code	O–Ring Material Shore A	Code	O-Ring Operating Temp.* °C	Mating Surface Material	MPa max. Dyna-mic
Turcon® M12 **First material choice** for seals in linear motion Overall improved properties For new constructions and updating For all commonly applied hydraulic fluids including fluids with low lubrication performance Lowest friction and best sliding properties Lowest wear on seals Improved absorption of abrasive contaminants No wear or abrasion of counter surface Mineral fibre and Additives filled Colour: Dark grey	M12	NBR - 70	N	-30 to +100	Steel Steel hardened Steel chrome plated (rod) Steel plated (rod) Cast iron Stainless steel Titanium	50
		NBR - 70 Low temp.	T	-45 to +80		
		FKM - 70	V	-20 to +200		
Turcon® T05 For lubricating fluids Also for gas service Very low friction Very good sliding and sealing properties Colour: Turquoise	T05	NBR - 70	N	-30 to +100	Steel hardened Steel chrome plated (rod)	20
		NBR - 70 Low temp.	T	-45 to +80		
		FKM - 70	V	-10 to +200		
Turcon® T08 For lubricating fluids and linear motion **Very high compressive strength and extrusion resistance** Hard counter surfaces is recommended Bronze filled Colour: Light to dark brown, which may have variations in shading	T08	NBR - 70	N	-30 to +100	Steel hardened Steel chrome plated (rod) Cast iron	60
		NBR - 70 Low temp.	T	-45 to +80		
		FKM - 70	V	-10 to +200		
Turcon® T10 For hydraulic and pneumatic For linear motion in lubricating and non-lubricating fluids High extrusion resistance Good chemical resistance Not for electrically conducting fluids BAM tested Carbon, graphite filled Colour: Black	T10	NBR - 70	N	-30 to +100	Steel Steel hardened Steel chrome plated (rod) Stainless steel	40
		NBR - 70 Low temp.	T	-45 to +80		
		FKM - 70	V	-10 to +200		
		EPDM - 70	E**	-45 to +145		
Turcon® T29 For lubricating and non-lubricating fluids Good extrusion resistance Surface texture is not suitable for gas sealing Not for electrically conducting fluids Carbon fibre filled Colour: Grey	T29	NBR - 70	N	-30 to +100	Steel Steel hardened Steel chrome plated (rod) Cast iron Stainless steel	30
		NBR - 70 Low temp.	T	-45 to +80		
		FKM - 70	V	-10 to +200		
		EPDM - 70	E**	-45 to +145		
Turcon® T40 For lubricating and non-lubricating fluids High frequency and short strokes **Water hydraulics** Surface texture is not suitable for gas sealing Carbon fibre filled Colour: Grey	T40	NBR - 70	N	-30 to +100	Steel Steel hardened Steel chrome plated (rod) Cast iron Stainless steel Aluminium	25
		NBR - 70 Low temp.	T	-45 to +80		
		FKM - 70	V	-10 to +200		
		EPDM - 70	E**	-45 to +145		

* The O-Ring Operation Temperature is only valid in mineral hydraulic oil. ** Material not suitable for mineral oils.

Highlighted materials are standard.

Material, Applications, Properties	Code	O–Ring Material Shore A	Code	O-Ring Operating Temp.* °C	Mating Surface Material	MPa max. Dynamic
Turcon® T46 For lubricated hydraulics in linear motion High compressive strength High extrusion resistance Very good sliding and wear properties BAM tested Bronze filled Colour: Light to dark brown, which may have variations in shading	T46	NBR - 70	N	-30 to +100	Steel hardened Steel chrome plated (rod) Cast iron	50
		NBR - 70 Low temp.	T	-45 to +80		
		FKM - 70	V	-10 to +200		
Zurcon® Z51*** For mineral oil based fluids **Very high abrasion and extrusion resistance** For counter surface with rougher surface finish Limited chemical resistance Max. working temperature 110 °C Cast polyurethane Colour: Yellow to light-brown	Z51	NBR - 70	N	-30 to +100	Steel Steel hardened Steel chrome plated (rod) Cast iron Stainless steel Ceramic coating	60
		NBR - 70 Low temp.	T	-45 to +80		
Zurcon® Z52*** For mineral oil based fluids Linear and slowly turning movements High abrasion resistance For counter surface with rougher surface finish Good extrusion resistance Limited chemical resistance Max. working temperature 110 °C Cast polyurethane Colour: Turquoise.	Z52	NBR - 70	N	-30 to +100	Steel Steel hardened Steel chrome plated (rod) Cast iron Stainless steel Aluminium Bronze Ceramic coating	25
		NBR - 70 Low temp.	T	-45 to +80		
Zurcon® Z80 For lubricating and non-lubricating fluids Water based fluids, air and gases Dry air pneumatics High abrasion and extrusion resistance For service in abrasive conditions and media with particles Good chemical resistance Limited temperature capability (-60 to +80 °C) UHMWPE (Ultra High Molecular Weight Polyethylene) Colour: White to off-white	Z80	NBR - 70	N	-30 to (+100)	Steel Steel hardened Steel chrome plated (rod) Stainless steel Aluminium Ceramic coating	35
		NBR - 70 Low temp.	T	-45 to +80		
		EPDM - 70	E**	-45 to (+145)		

* The O-Ring Operation Temperature is only valid in mineral hydraulic oil. ** Material not suitable for mineral oils.

Highlighted materials are standard.

■ Installation Recommendation

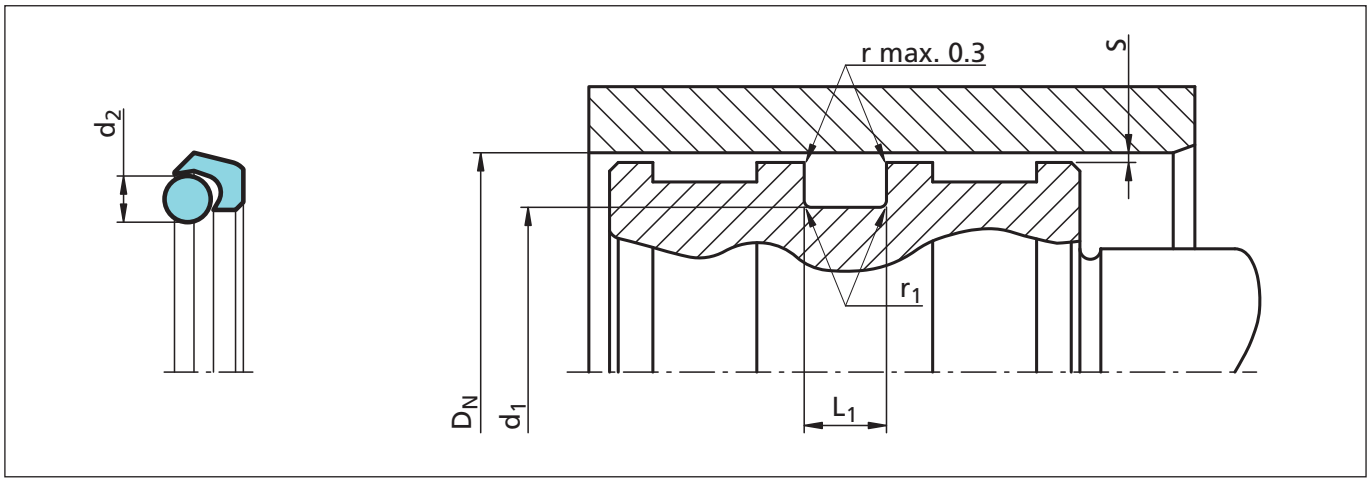

Figure 40 Installation drawing

Table XLIV Installation dimensions - Standard Recommendations

Bore Diameter D_N H9			Groove Diameter d_1 h9	Groove Width L_1 +0.2	Radius r_1	Radial Clearance* S_{max}			O-Ring Cross-Section d_2
Series No.	Standard Application	Available Range				10 MPa	20 MPa	30 MPa	
PEL10	14 - 24.9	10 - 100.0	D_N - 4.5	3.6	0.4	0.40	0.25	0.15	1.78
PEL20	25 - 45.9	16 - 200.0	D_N - 6.2	4.8	0.6	0.40	0.25	0.20	2.62
PEL30	46 - 124.9	28 - 400.0	D_N - 9.4	7.1	0.8	0.50	0.30	0.20	3.53
PEL40	125 - 399.9	45 - 650.0	D_N - 12.2	9.5	0.8	0.60	0.35	0.25	5.33
PEL50	400 - 649.9	125 - 999.9	D_N - 15.9	12.2	0.8	0.70	0.50	0.30	7.00
PEL60	650 - 999.9	400 - 999.9	D_N - 19.0	15.0	0.8	1.00	0.70	0.60	8.40
PEL6X	≥ 1000	1000 - 2700	D_N - 19.0	15.0	0.8	1.00	0.70	0.60	8.40

* At pressures **> 40 MPa** use diameter tolerance H8/f8 (bore/piston) in area of the seal or consult TSS for alternative material or profiles.
TSS Slydring® / Wear Rings are not applicable at very small radical clearance S. Please consult the Slydring® catalog.
For minimum diameter installation in closed grooves see Table VI, page 13.

Ordering example

Turcon® VL Seal® complete with O-Ring, standard application:

Series: PEL30 (from Table XLIV).
Bore diameter: D_N = 80.0 mm
TSS Part No.: PEL300800 (from Table XLV).

Select the material from Table XLIII.
The corresponding code numbers are appended to the TSS Part No.
Together these form the TSS Article Number.

The TSS Article Number for all intermediate sizes not shown in Table XLV can be determined following the example below.

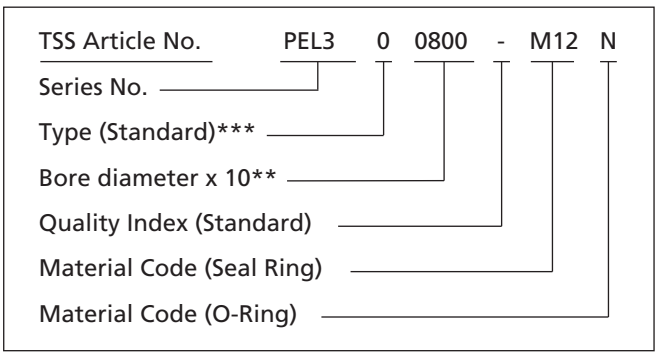

** For diameters ≥ 1000.0 mm multiply only by factor 1.
Example: PEL6X for diameter 1200.0 mm.
TSS Article No.: PEL6X**1200** - M12N.

*** Use suffix "N" for seals with radial notches, for diameter D_N < 1000 mm. (Radial notches for diameter D_N ≥ 1000 mm special part number is required).

Table XLV Installation dimensions / Part No.

Bore	Groove Dia.	Groove Width	Part No.	O-Ring Sizes
D_N H9	d_1 h9	L_1 +0.2		
10.0	5.5	3.6	PEL100100	4.80 x 1.80
12.0	**7.5**	**3.6**	**PEL100120**	**7.10 x 1.80**
14.0	9.5	3.6	PEL100140	8.75 x 1.80
16.0	**11.5**	**3.6**	**PEL100160**	**11.20 x 1.80**
16.0	**9.8**	**4.8**	**PEL200160**	**9.19 x 2.62**
18.0	13.5	3.6	PEL100180	13.20 x 1.80
18.0	11.8	4.8	PEL200180	10.77 x 2.62
20.0	**15.5**	**3.6**	**PEL100200**	**14.00 x 1.78**
20.0	**13.8**	**4.8**	**PEL200200**	**12.37 x 2.62**
22.0	17.5	3.6	PEL100220	17.17 x 1.78
22.0	15.8	4.8	PEL200220	14.50 x 2.65
25.0	**20.5**	**3.6**	**PEL100250**	**20.35 x 1.78**
25.0	**18.8**	**4.8**	**PEL200250**	**18.00 x 2.65**
28.0	21.8	4.8	PEL200280	20.29 x 2.62
28.0	18.6	7.1	PEL300280	17.04 x 3.53
30.0	25.5	3.6	PEL100300	25.12 x 1.78
30.0	23.8	4.8	PEL200300	23.47 x 2.62
32.0	**27.5**	**3.6**	**PEL100320**	**26.70 x 1.78**
32.0	**25.8**	**4.8**	**PEL200320**	**25.07 x 2.62**
32.0	22.6	7.1	PEL300320	21.82 x 3.53
35.0	28.8	4.8	PEL200350	28.24 x 2.62
40.0	**35.5**	**3.6**	**PEL100400**	**34.65 x 1.78**
40.0	**33.8**	**4.8**	**PEL200400**	**32.99 x 2.62**
40.0	30.6	7.1	PEL300400	29.75 x 3.53
42.0	35.8	4.8	PEL200420	34.59 x 2.62
45.0	38.8	4.8	PEL200450	37.77 x 2.62
45.0	32.8	9.5	PEL400450	31.12 x 5.33
48.0	41.8	4.8	PEL200480	40.94 x 2.62
50.0	**43.8**	**4.8**	**PEL200500**	**42.52 x 2.62**
50.0	**40.6**	**7.1**	**PEL300500**	**40.87 x 3.53**
50.0	37.8	9.5	PEL400500	37.47 x 5.33
52.0	45.8	4.8	PEL200520	45.69 x 2.62
55.0	48.8	4.8	PEL200550	48.90 x 2.62
60.0	50.6	7.1	PEL300600	50.39 x 3.53
63.0	**56.8**	**4.8**	**PEL200630**	**56.82 x 2.62**
63.0	**53.6**	**7.1**	**PEL300630**	**53.57 x 3.53**

Bore	Groove Dia.	Groove Width	Part No.	O-Ring Sizes
D_N H9	d_1 h9	L_1 +0.2		
63.0	50.8	9.5	PEL400630	50.17 x 5.33
65.0	55.6	7.1	PEL300650	53.57 x 3.53
70.0	63.8	4.8	PEL200700	63.17 x 2.62
70.0	60.6	7.1	PEL300700	59.92 x 3.53
75.0	65.6	7.1	PEL300750	63.09 x 3.53
80.0	**70.6**	**7.1**	**PEL300800**	**69.44 x 3.53**
80.0	67.8	9.5	PEL400800	66.04 x 5.33
85.0	75.6	7.1	PEL300850	75.79 x 3.53
85.0	72.8	9.5	PEL400850	72.39 x 5.33
90.0	80.6	7.1	PEL300900	78.97 x 3.53
90.0	77.8	9.5	PEL400900	75.57 x 5.33
95.0	85.6	7.1	PEL300950	85.32 x 3.53
95.0	82.8	9.5	PEL400950	81.92 x 5.33
100.0	**90.6**	**7.1**	**PEL301000**	**88.49 x 3.53**
100.0	87.8	9.5	PEL401000	88.27 x 5.33
105.0	95.6	7.1	PEL301050	94.84 x 3.53
105.0	92.8	9.5	PEL401050	91.44 x 5.33
106.0	96.6	7.1	PEL301060	94.84 x 3.53
110.0	100.6	7.1	PEL301100	101.19 x 3.53
110.0	97.8	9.5	PEL401100	97.79 x 5.33
115.0	105.6	7.1	PEL301150	104.37 x 3.53
115.0	102.8	9.5	PEL401150	100.97 x 5.33
120.0	110.6	7.1	PEL301200	110.72 x 3.53
120.0	107.8	9.5	PEL401200	107.32 x 5.33
125.0	**115.6**	**7.1**	**PEL301250**	**113.89 x 3.53**
125.0	**112.8**	**9.5**	**PEL401250**	**110.49 x 5.33**
125.0	109.1	12.2	PEL501250	107.35 x 7.00
130.0	120.6	7.1	PEL301300	120.24 x 3.53
130.0	117.8	9.5	PEL401300	116.84 x 5.33
135.0	122.8	9.5	PEL401350	123.19 x 5.33
140.0	127.8	9.5	PEL401400	126.37 x 5.33
140.0	124.1	12.2	PEL501400	123.19 x 7.00
145.0	132.8	9.5	PEL401450	132.72 x 5.33
150.0	137.8	9.5	PEL401500	135.89 x 5.33
155.0	145.6	7.1	PEL301550	145.64 x 3.53
160.0	**150.6**	**7.1**	**PEL301600**	**148.82 x 3.53**

Bore	Groove Dia.	Groove Width	Part No.	O-Ring Sizes
D_N H9	d_1 h9	L_1 +0.2		
160.0	**147.8**	**9.5**	**PEL401600**	**145.42 x 5.33**
160.0	144.1	12.2	PEL501600	142.24 x 7.00
165.0	155.6	7.1	PEL301650	151.99 x 3.53
165.0	152.8	9.5	PEL401650	151.77 x 5.33
170.0	157.8	9.5	PEL401700	158.12 x 5.33
175.0	165.6	7.1	PEL301750	164.69 x 3.53
180.0	170.6	7.1	PEL301800	171.04 x 3.53
180.0	167.8	9.5	PEL401800	164.47 x 5.33
180.0	164.1	12.2	PEL501800	164.47 x 7.00
190.0	180.6	7.1	PEL301900	177.39 x 3.53
190.0	177.8	9.5	PEL401900	177.17 x 5.33
200.0	**190.6**	**7.1**	**PEL302000**	**190.09 x 3.53**
200.0	**187.8**	**9.5**	**PEL402000**	**189.87 x 5.33**
200.0	184.1	12.2	PEL502000	183.52 x 7.00
205.0	192.8	9.5	PEL402050	189.87 x 5.33
210.0	197.8	9.5	PEL402100	196.22 x 5.33
220.0	210.6	7.1	PEL302200	209.14 x 3.53
220.0	207.8	9.5	PEL402200	208.92 x 5.33
220.0	204.1	12.2	PEL502200	202.57 x 7.00
230.0	217.8	9.5	PEL402300	215.27 x 5.33
240.0	227.8	9.5	PEL402400	227.97 x 5.33
250.0	**237.8**	**9.5**	**PEL402500**	**234.32 x 5.33**
250.0	234.1	12.2	PEL502500	227.97 x 7.00
300.0	284.1	12.2	PEL503000	278.77 x 7.00
306.0	293.8	9.5	PEL403060	291.47 x 5.33
320.0	**307.8**	**9.5**	**PEL403200**	**304.17 x 5.33**
320.0	304.1	12.2	PEL503200	304.17 x 7.00
345.0	332.8	9.5	PEL403450	329.57 x 5.33
350.0	334.1	12.2	PEL503500	329.57 x 7.00
400.0	384.1	12.2	PEL504000	380.37 x 7.00
400.0	381.0	15.0	PEL604000	379 x 8.40
440.0	424.1	12.2	PEL504400	430.66 x 7.00
450.0	431.0	15.0	PEL604500	429 x 8.40
500.0	484.1	12.2	PEL505000	481.38 x 7.00
500.0	481.0	15.0	PEL605000	479 x 8.40
520.0	507.8	9.5	PEL405200	506.78 x 5.33

Bore	Groove Dia.	Groove Width	Part No.	O-Ring Sizes
D_N H9	d_1 h9	L_1 +0.2		
540.0	524.1	12.2	PEL505400	532.26 x 7.00
540.0	521.0	15.0	PEL605400	519 x 8.40
600.0	584.1	12.2	PEL506000	582.68 x 7.00
600.0	581.0	15.0	PEL606000	579 x 8.40
650.0	634.1	12.2	PEL506500	633.48 x 7.00
650.0	631.0	15.0	PEL606500	629 x 8.40
700.0	684.1	12.2	PEL507000	682 x 7.00
700.0	681.0	15.0	PEL607000	679 x 8.40
800.0	784.1	12.2	PEL508000	782 x 7.00
800.0	781.0	15.0	PEL608000	779 x 8.40
860.0	844.1	12.2	PEL508600	842 x 7.00
900.0	884.1	12.2	PEL509000	882 x 7.00
900.0	881.0	15.0	PEL609000	879 x 8.40
920.0	904.1	12.2	PEL509200	902 x 7.00
1000.0	981.0	15.0	PEL6X1000	979 x 8.40
1200.0	1181.0	15.0	PEL6X1200	1179 x 8.40
1500.0	1481.0	15.0	PEL6X1500	1479 x 8.40
2000.0	1981.0	15.0	PEL6X2000	1979 x 8.40
2700.0	2681.0	15.0	PEL6X2700	2679 x 8.40

The bore diameters in **bold** type are in accordance with the recommendations of ISO 3320.

Other dimensions and all intermediate sizes up to 2700 mm diameter including imperial (inch) sizes can be supplied.

Zurcon® U-Cup PUA

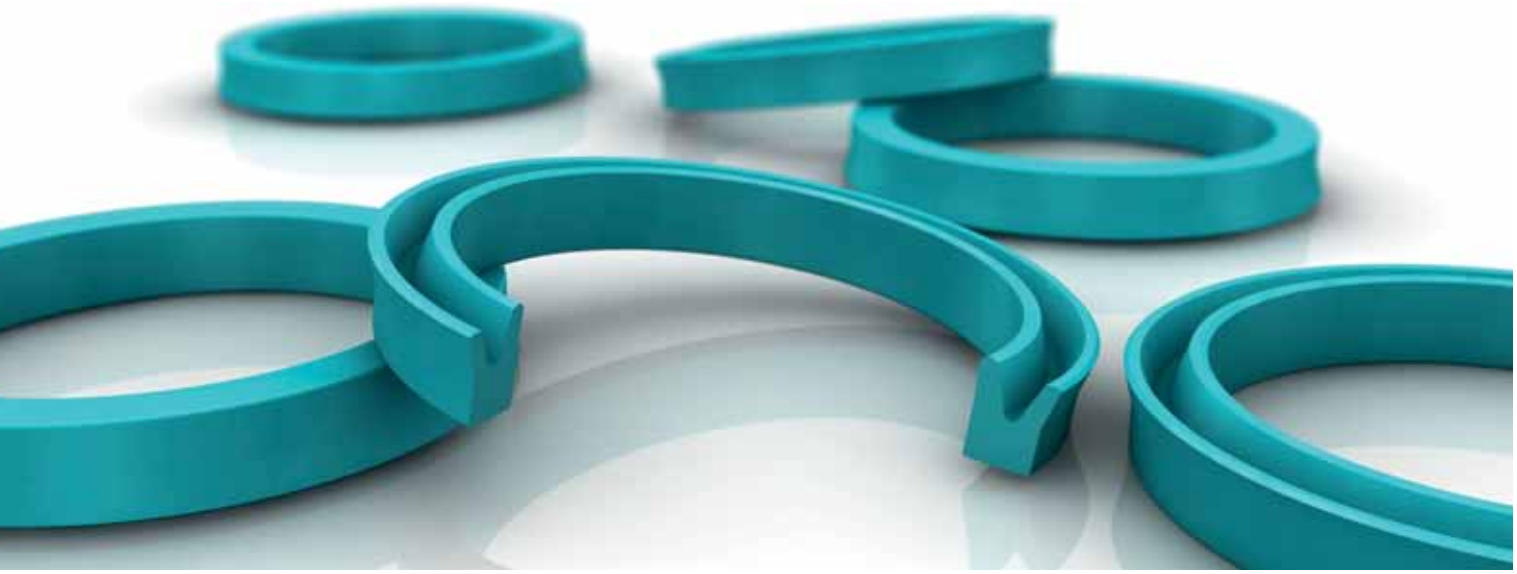

Single Acting

Asymmetric, Single Lip

Material:
Zurcon®

■ Piston U-Cup PUA

Description

The U-Cup is a single acting piston seal out of injection moulded polyurethane. It is provided with a robust dynamic sealing lip and a wide contact area of the static lip, which guaranties an effective positioning in the groove.

The profile is suitable for pressures up to 40 MPa provided that the extrusion gap is adapted to the pressure level.

Thanks to the elasticity of the polyurethane material the U Cup can easily be installed in closed grooves.

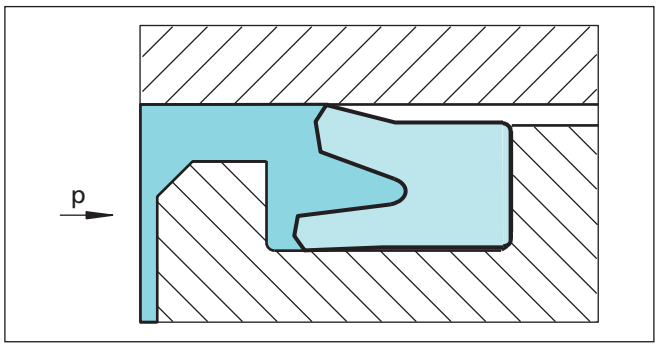

Figure 41 Piston U-Cup Type PUA

Advantages

- Simple groove design
- High abrasion resistance
- Long service life
- Effective sealing effect even with non excellent mating surface finish

Application Examples

The U-Cup is the recommended sealing element for single acting pistons of hydraulic components such as:

- Presses
- Lift platforms
- Aftermarket

Technical Data

Operating conditions

Pressure: Up to 40 MPa

Speed: Up to 0.5 m/s

Temperature: from -35 °C to + 110 °C

Media: Mineral oil based hydraulic fluids

Clearance: From Table XLVI the maximum value of the radial clearance Smax can be selected for dimensioning the piston.
The values indicated in this table must be reduced by 30% when temperature exceeds 80 °C.

Table XLVI Clearance

Operating Pressure MPa	Radial Clearance S max.	
	d_N <60 mm	d_N >60 mm
5	0.40	0.50
10	0.30	0.40
20	0.20	0.30
30	0.15	0.20
40	0.10	0.15

Important Note:
The above data are maximum values and cannot be used at the same time. e.g. the maximum operating speed depends on material type, pressure, temperature and gap value.
Temperature range also dependent on medium.

Materials

Standard Material:

- For hydraulic components in mineral oils or medium with good lubricating performance, polyurethane 93 Shore A

Zurcon® Z20

Colour: turquoise

■ Installation Recommendation

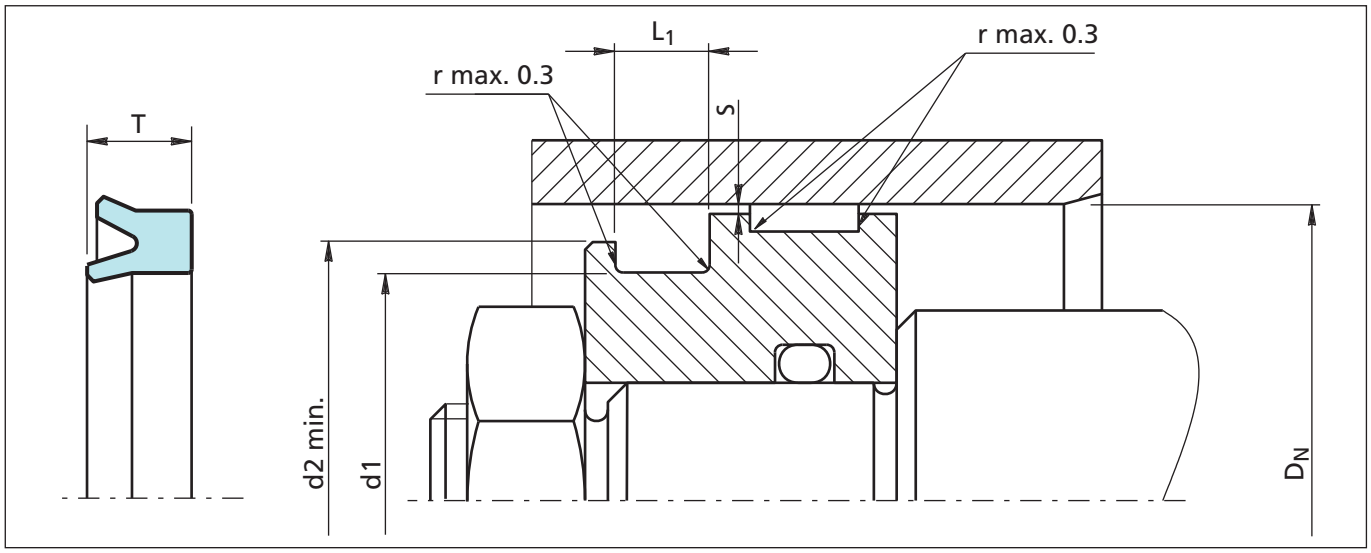

Figure 42 Installation drawing
* Dimensions "S" see Table XLVI

Ordering Example

Bore diameter:	D_N	= 80 mm
Groove diameter:	d1	= 60 mm
Groove width:	L1	= 13 mm
TSS Part No.:	PUA000800 (Table XLVII)	
Material code:	Z20	

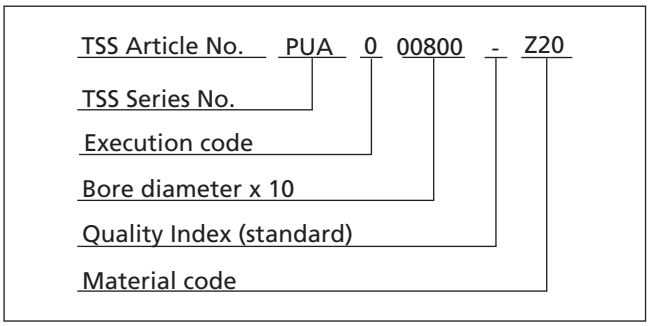

Table XLVII Installation dimensions / TSS Part No.

Bore Dia.	Groove Dia.	Seal Width	Groove Width	Fitting Dia.	TSS Part No.
D_N H9	d_1 h9	T	L1 +0.2	d_2 min	
14.0	8.0	6.3	6.8	11.0	PUA000140
16.0	8.0	6.0	5.5	13.0	PUA300160
20.0	12.0	6.5	7.5	15.0	PUA000200
22.0	12.0	8.0	9.0	16.0	PUA000220
25.0	15.0	8.0	9.0	19.0	PUA000250
30.0	20.0	8.0	9.0	24.0	PUA100300
30.0	22.0	6.5	7.0	26.0	PUA400300
32.0	22.0	8.0	9.0	26.0	PUA000320
32.0	26.0	5.0	6.0	28.0	PUA200320
35.0	25.0	8.0	9.0	29.0	PUA100350
40.0	30.0	6.5	7.5	34.0	PUA200400
40.0	30.0	10.0	11.0	34.0	PUA500400

Bore Dia.	Groove Dia.	Seal Width	Groove Width	Fitting Dia.	TSS Part No.
D_N H9	d_1 h9	T	L1 +0.2	d_2 min	
40.0	32.0	5.5	6.5	36.0	PUA300400
45.0	30.0	10.0	11.0	35.0	PUA100450
50.0	40.0	10.0	11.0	44.0	PUA400500
50.0	42.0	5.5	6.0	45.0	PUA900500
52.0	42.0	5.7	6.5	46.0	PUA000520
55.0	40.0	10.0	11.0	45.0	PUA000550
60.0	50.0	7.0	8.0	54.0	PUA000600
60.0	50.0	10.0	11.0	54.0	PUA600600
63.0	48.0	12.0	13.0	53.0	PUA000630
63.0	53.0	7.0	8.0	57.0	PUA200630
65.0	50.0	10.0	11.0	55.0	PUA100650
65.0	55.0	10.0	11.0	59.0	PUA400650
70.0	60.0	7.0	8.0	64.0	PUA100700
70.0	60.0	12.0	13.0	64.0	PUA700700
75.0	65.0	7.0	8.0	69.0	PUA500750
75.0	65.0	10.0	11.0	69.0	PUA400750
80.0	60.0	12.0	13.0	65.0	PUA000800
80.0	68.0	8.5	9.5	72.0	PUA300800
80.0	70.0	12.0	13.0	74.0	PUA700800
85.0	70.0	12.0	13.0	75.0	PUA300850
90.0	75.0	12.0	13.0	80.0	PUA300900
90.0	80.0	10.0	11.0	84.0	PUA000900
95.0	75.0	13.5	14.5	80.0	PUA100950
100.0	80.0	12.0	13.0	85.0	PUA001000
100.0	85.0	12.0	13.0	90.0	PUA401000
110.0	95.0	12.0	13.0	100.0	PUA101100
110.0	100.0	7.0	8.0	104.0	PUA201100
115.0	100.0	12.0	13.0	105.0	PUA001150
120.0	100.0	12.0	13.0	105.0	PUA001200
125.0	100.0	15.0	16.0	105.0	PUA201250
125.0	105.0	12.0	13.0	110.0	PUA301250
125.0	110.0	10.0	11.0	115.0	PUA101250
130.0	110.0	15.0	16.0	115.0	PUA001300
140.0	120.0	12.0	13.0	125.0	PUA001400
150.0	130.0	15.0	16.0	135.0	PUA101500
160.0	140.0	11.5	12.5	145.0	PUA001600
180.0	160.0	11.5	12.5	165.0	PUA201800
200.0	175.0	15.0	16.0	180.0	PUA102000
250.0	225.0	15.0	16.0	230.0	PUA102500

Zurcon® Wynseal

Double Acting

Rubber Energized Plastic Faced Seal

High Static and Dynamic Sealing Effect

Material:
Zurcon® + NBR

■ Zurcon® Wynseal

Description
The Zurcon® Wynseal is a double-acting seal consisting of a special polyurethane seal ring and an O-Ring as energizing element (Figure 43).

The particular characteristic of the seal is the special design of the seal edge profile. Two external seal edges act as primary seal for pressures from both sides and prevent any build-up of hydrodynamic pressure over the seal profile and the risk of the blow-by effect. The central back-up and sealing bulge increases the sealing effect*. Grooves are provided on both sides on the plane surfaces to provide activation of the energizing O-Ring. These ensure direct pressure loading of the seal under all operating conditions.

Since the installation groove is identical to that for the Turcon® Glyd Ring®, the seal is ideal for the standardisation of cylinder construction if, efficient and low cost seal elements are demanded in large quantities and, the cylinder can be adapted to meet different operating conditions. It has to be taken into consideration that in this case the gap dimension has to be checked!

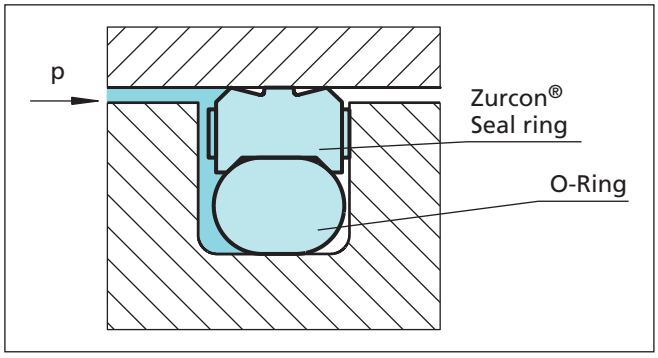

Figure 43 Zurcon® Wynseal

Advantages

- High static and dynamic sealing effect
- High abrasion resistance
- Simple groove design, one-piece piston possible
- Suitable for grooves to ISO 7425, Part 1.

* Only from PW42 and the following Series No.; PW40 and PW41 without sealing and supporting bulge.

Application Examples

The Zurcon® Wynseal is the recommended

element for double acting pistons of hydraulic components in various sectors such as:

- Machine tools
- Forklifts & handling machinery
- Agriculture
- Industrial hydraulic light to medium duty

Technical Data

Pressure:	Up to 25 MPa	(Z20N)
	Up to 40 MPa	(Z23N)
Speed:	Up to 0.5 m/s	
Temperature:	-35 °C to +110 °C	
Media:	Mineral oil-based hydraulic fluids	

Important Note:
The above data are maximum values and cannot be used at the same time. e.g. the maximum operating speed depends on material type, pressure, temperature and gap value.
Temperature range also dependent on medium.

Materials

Wynseal:	Zurcon® Z20, 93 Shore A (on request 96 Shore A:reference Z23)
O-Ring:	NBR 70 Shore A
Set reference:	Z20N (Z23N)

■ Installation Recommendation

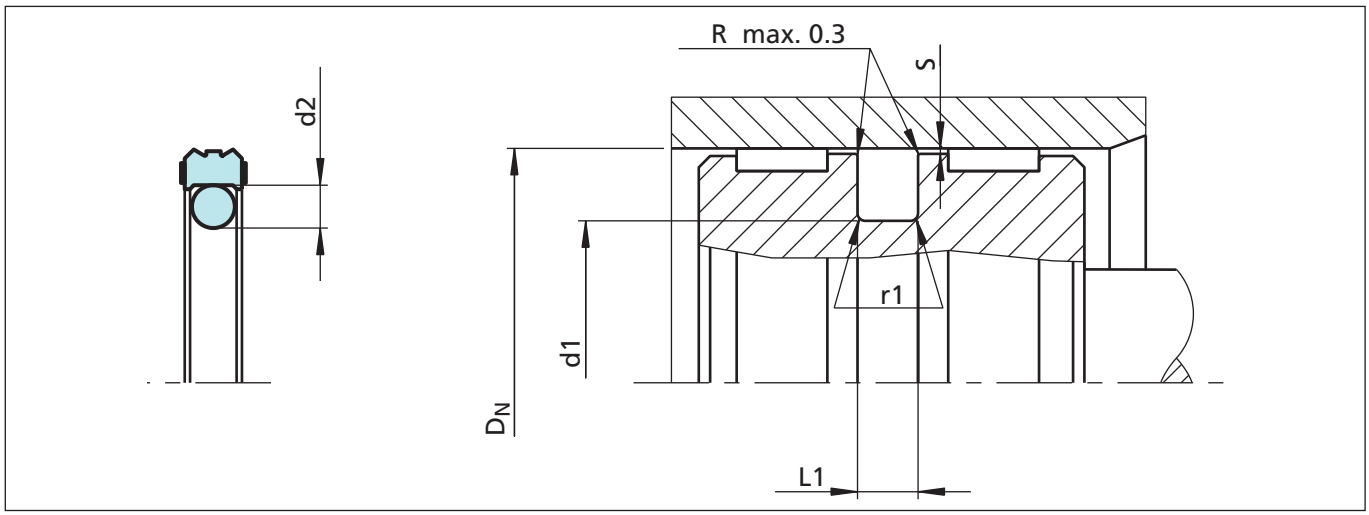

Figure 44 Installation drawing

Table XLVIII Installation dimensions

Series No.	Groove Diameter	Groove Width	Radius	Radial Clearance	O-Ring Cross Section
	d1 h9	**L1** +0.2	**r1**	**S max**	**d2**
PW40	DN - 4,9	2.2	0.4	0.20	1.78
PW41	DN - 7.5	3.2	0.6	0.25	2.62
PW42	DN - 11.0	4.2	1.0	0.25	3.53
PW43	DN - 15.5	6.3	1.3	0.30	5.33
PW44	DN - 21.0	8.1	1.8	0.30	7.00

Ordering example

Wynseal for ISO groove
Bore diameter: D_N = 63 mm
Series No. PW43
TSS Part No. PW4300630 (from Table XLIX)
Material Z20
material code: Z20
O-Ring material code: N
Set code: Z20N

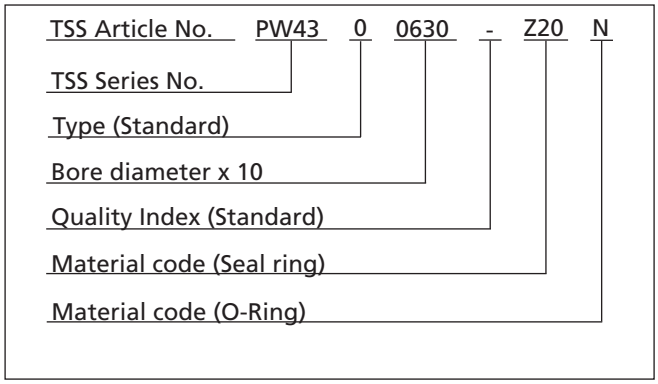

Material Z23
material code: Z23
O-Ring material code: N
Set code: Z23N

TSS Article No. PW43 0 0630 - Z23 N

- TSS Series No.
- Type (Standard)
- Bore diameter x 10
- Quality Index (Standard)
- Material code (Seal ring)
- Material code (O-Ring)

Table XLIX Installation dimensions / TSS Part No.

Bore Diameter	Groove Diameter	Groove Width	TSS Part No.
D_N H9	d_1 h9	L1 +0.2	
12.0	7.1	2.2	PW4000120
12.0	4.5	3.2	PW4100120
16.0	**8.5**	**3.2**	**PW4100160**
20.0	**12.5**	**3.2**	**PW4100200**
22.0	14.5	3.2	PW4100220
24.0	16.5	3.2	PW4100240
25.0	**17.5**	**3.2**	**PW4100250**
25.0	**14.0**	**4.2**	**PW4200250**
30.0	22.5	3.2	PW4100300
32.0	**24.5**	**3.2**	**PW4100320**
32.0	**21.0**	**4.2**	**PW4200320**
35.0	27.5	3.2	PW4100350
35.0	24.0	4.2	PW4200350
36.0	28.5	3.2	PW4100360
38.0	30.5	3.2	PW4100380
40.0	**32.5**	**3.2**	**PW4100400**
40.0	**29.0**	**4.2**	**PW4200400**
42.0	31.0	4.2	PW4200420
45.0	34.0	4.2	PW4200450
45.0	29.5	6.3	PW4300450
49.0	38.0	4.2	PW4200490
50.0	**39.0**	**4.2**	**PW4200500**
50.0	34.5	6.3	PW4300500
52.0	36.5	6.3	PW4300520
55.0	44.0	4.2	PW4200550
55.0	39.5	6.3	PW4300550
56.0	45.0	4.2	PW4200560

The sizes printed in **bold** type are suitable for grooves to ISO 7425/1. Additional dimensions can be delivered on request.

Bore Diameter	Groove Diameter	Groove Width	TSS Part No.
D_N H9	d_1 h9	L1 +0.2	
57.0	46.0	4.2	PW4200570
60.0	49.0	4.2	PW4200600
60.0	44.5	6.3	PW4300600
63.0	**52.0**	**4.2**	**PW4200630**
63.0	**47.5**	**6.3**	**PW4300630**
65.0	54.0	4.2	PW4200650
65.0	49.5	6.3	PW4300650
70.0	59.0	4.2	PW4200700
70.0	54.5	6.3	PW4300700
75.0	64.0	4.2	PW4200750
75.0	59.5	6.3	PW4300750
80.0	**69.0**	**4.2**	**PW4200800**
80.0	**64.5**	**6.3**	**PW4300800**
85.0	69.5	6.3	PW4300850
90.0	74.5	6.3	PW4300900
95.0	79.5	6.3	PW4300950
100.0	**84.5**	**6.3**	**PW4301000**
105.0	89.5	6.3	PW4301050
110.0	94.5	6.3	PW4301100
115.0	99.5	6.3	PW4301150
120.0	104.5	6.3	PW4301200
125.0	**109.5**	**6.3**	**PW4301250**
125.0	**104.0**	**8.1**	**PW4401250**
130.0	114.5	6.3	PW4301300
135.0	114.0	8.1	PW4401350
140.0	119.0	8.1	PW4401400
150.0	129.0	8.1	PW4401500
160.0	**139.0**	**8.1**	**PW4401600**
170.0	149.0	8.1	PW4401700
180.0	159.0	8.1	PW4401800
190.0	169.0	8.1	PW4401900
200.0	**179.0**	**8.1**	**PW4402000**
210.0	189.0	8.1	PW4402100
220.0	199.0	8.1	PW4402200
230.0	209.0	8.1	PW4402300
240.0	219.0	8.1	PW4402400
250.0	**229.0**	**8.1**	**PW4402500**
300.0	279.0	8.1	PW4403000

The sizes printed in **bold** type are suitable for grooves to ISO 7425/1. Additional dimensions can be delivered on request.

Zurcon® Wynseal M

Double Acting

Rubber Energized Plastic Faced Seal

Material:
Turcon®, Zurcon® and Elastomer

■ Zurcon® Wynseal M

Description

The Wynseal is available in a slightly modified machined version, the Zurcon® Wynseal M, in Zurcon® and Turcon® materials.

The Zurcon® Wynseal M is a double-acting seal consisting of a Zurcon® or Turcon® seal ring and an O-Ring as energizing element – see Figure 45.

The seal is designed with a seal edge profile. Two external seal edges act as primary seal for pressures from both sides and prevent any build-up of hydrodynamic pressure over the seal profile and the risk of the blow-by effect. The central sealing and supporting bulge increases the sealing effect *. Notches are provided on both sides on the plane surfaces to provide activation of the energizing O-Ring. These ensure direct pressure loading of the seal under all operating conditions.

Installation groove is identical to that for the Turcon® Glyd Ring®.

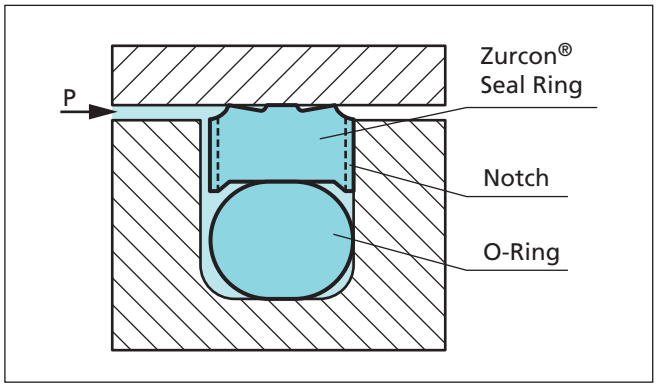

Figure 45 Zurcon® Wynseal M

* Only from PW62 and the following Series No.; PW60 is without seal edge profile and PW61 is without supporting bulge.

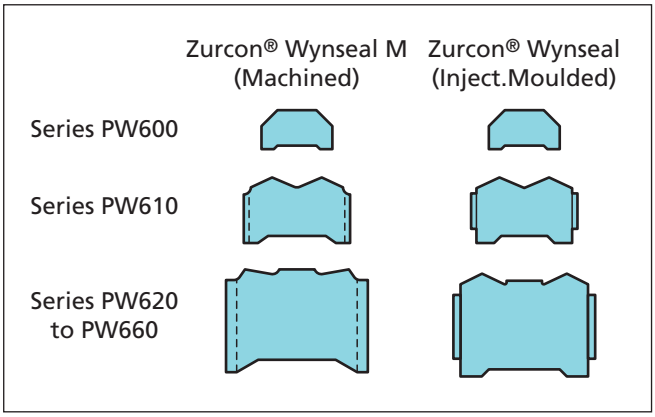

Figure 46 Zurcon® Wynseal M and Zurcon® Wynseal profiles

Advantages

- High static and dynamic sealing effect
- High abrasion resistance (Zurcon® materials)
- Simple groove design, one-piece piston possible
- Diameter range - from 8 to 2700 mm
- Grooves according to ISO 7425/1
- For lower friction
- Higher temperature
- Higher pressure
- Better chemical resistance

Application Examples

The Zurcon® Wynseal M is the recommended element for double acting pistons of hydraulic components in various sectors such as:

- Machine tools
- Forklifts & handling machinery
- Agriculture
- Industrial hydraulic light to medium duty

Technical Data

Operating conditions:

Pressure:	Up to 50 MPa
Speed:	Up to 10 m/s
Temperature:	-45 °C to +200 °C * (depending on seal and O-Ring material)
Media:	Mineral oil-based hydraulic fluids, flame retardant hydraulic fluids, environmentally safe hydraulic fluids (bio-oils), phosphate ester, water and others, depending on the seal and O-Ring material compatibility - see Table L.
Clearance:	The maximum permissible radial clearance S_{max} is shown in Table LI, as a function of the operating pressure and functional diameter.

Important Note:
The above data are maximum values and cannot be used at the same time. e.g. the maximum operating speed depends on material type, pressure, temperature and gap value. Temperature range also dependent on medium.

*) in the case of unpressurized applications in temperatures below 0°C please contact our application engineers for assistance!

Installation

Zurcon® Wynseal® M is installed according to “Installation of Piston Seal” at page 10 to 12.

Materials

The following material combinations have proven effective for hydraulic applications:

For light to medium applications with reciprocating movements in mineral oils and other media with good lubrication:

Turcon® Wynseal M:	Zurcon® Z52
O-Ring:	NBR, 70 Shore A N
Set code:	Z52N

All round material for hydraulic applications with reciprocating, short stroke or helical movements in mineral oils, flame retardant hydraulic fluids HFC, phosphate ester, bio-oils or fluids having less satisfactory lubricating properties:

Turcon® Wynseal M:	Turcon® M12
O-Ring:	NBR, 70 Shore A N FKM, 70 Shore A V
Set code:	M12N or M12V

For specific applications, all Turcon® materials are available.

Other viable material combinations are listed in Table L.

Table L Turcon® and Zurcon® Materials for Zurcon® Wynseal M

Material, Applications, Properties	Code	O–Ring Material Shore A	Code	O-Ring Operating Temp.* °C	Mating Surface Material	MPa max. Dyna-mic
Turcon® M12 **First material choice** for seals in linear motion Overall improved properties For new constructions and updating For all commonly applied hydraulic fluids including fluids with low lubrication performance Lowest friction and best sliding properties Lowest wear on seals Improved absorption of abrasive contaminants No wear or abrasion of counter surface Mineral fibre and Additives filled Colour: Dark grey	M12	NBR - 70	N	-30 to +100	Steel Steel hardened Steel chrome plated (rod) Steel plated (rod) Cast iron Stainless steel Titanium	35
		NBR - 70 Low temp.	T	-45 to +80		
		FKM - 70	V	-10 to +200		
Turcon® T08 For lubricating fluids and linear motion **Very high compressive strength and extrusion resistance** Hard counter surfaces is recommended Bronze filled Colour: Light to dark brown, which may have variations in shading	T08	NBR - 70	N	-30 to +100	Steel hardened Steel chrome plated (rod) Cast iron	50
		NBR - 70 Low temp.	T	-45 to +80		
		FKM - 70	V	-10 to +200		
Turcon® T40 For lubricating and non-lubricating fluids High frequency and short strokes **Water hydraulics** Surface texture is not suitable for gas sealing Carbon fibre filled Colour: Grey	T40	NBR - 70	N	-30 to +100	Steel Steel hardened Steel chrome plated (rod) Cast iron Stainless steel Aluminium	25
		NBR - 70 Low temp.	T	-45 to +80		
		FKM - 70	V	-10 to +200		
		EPDM - 70	E**	-45 to +145		
Turcon® T46 For lubricated hydraulics in linear motion High compressive strength High extrusion resistance Very good sliding and wear properties BAM tested Bronze filled Colour: Light to dark brown, which may have variations in shading	T46	NBR - 70	N	-30 to +100	Steel hardened Steel chrome plated (rod) Cast iron	35
		NBR - 70 Low temp.	T	-45 to +80		
		FKM - 70	V	-10 to +200		
Zurcon® Z51*** For mineral oil based fluids **Very high abrasion and extrusion resistance** For counter surface with rougher surface finish Limited chemical resistance Max. working temperature 110 °C Cast polyurethane Colour: Yellow to light-brown	Z51	NBR - 70	N	-30 to +100	Steel Steel hardened Steel chrome plated (rod) Cast iron Stainless steel Ceramic coating	45
		NBR - 70 Low temp.	T	-45 to +80		

* The O-Ring Operation Temperature is only valid in mineral hydraulic oil (except EPDM)
** Material not suitable for mineral oils. *** Max. ø 2300 mm BAM: Tested by "Bundesanstalt Materialprüfung, Germany".
Highlighted materials are standard.

Zurcon® Wynseal M

Material, Applications, Properties	Code	O–Ring Material Shore A	Code	O-Ring Operating Temp.* °C	Mating Surface Material	MPa max. Dyna-mic
Zurcon® Z52*** For mineral oil based fluids High abrasion resistance For counter surface with rougher surface finish Good extrusion resistance Limited chemical resistance Max. working temperature 110 °C Cast polyurethane Colour: Turquoise	Z52	NBR - 70	N	-30 to +100	Steel Steel hardened Steel chrome plated (rod) Cast iron Stainless steel Ceramic coating	25
		NBR -70 Low temp.	T	-45 to +80		
Zurcon® Z80 For lubricating and non-lubricating fluids Water based fluids, air and gases Dry air pneumatics High abrasion and extrusion resistance For service in abrasive conditions and media with particles Good chemical resistance Limited temperature capability (-60 to +80 °C) UHMWPE (Ultra High Molecular Weight Polyethylene) Colour: White to off-white	Z80	NBR - 70	N	-30 to (+100)	Steel Steel hardened Steel chrome plated (rod) Stainless steel Aluminium Bronze Ceramic coating	30
		NBR - 70 Low temp.	T	-45 to +80		
		EPDM - 70	E**	-45 to(+145)		

* The O-Ring Operation Temperature is only valid in mineral hydraulic oil (except EPDM)
** Material not suitable for mineral oils. *** Max. ø 2300 mm BAM: Tested by "Bundesanstalt Materialprüfung, Germany".
Highlighted materials are standard.

■ Installation Recommendation

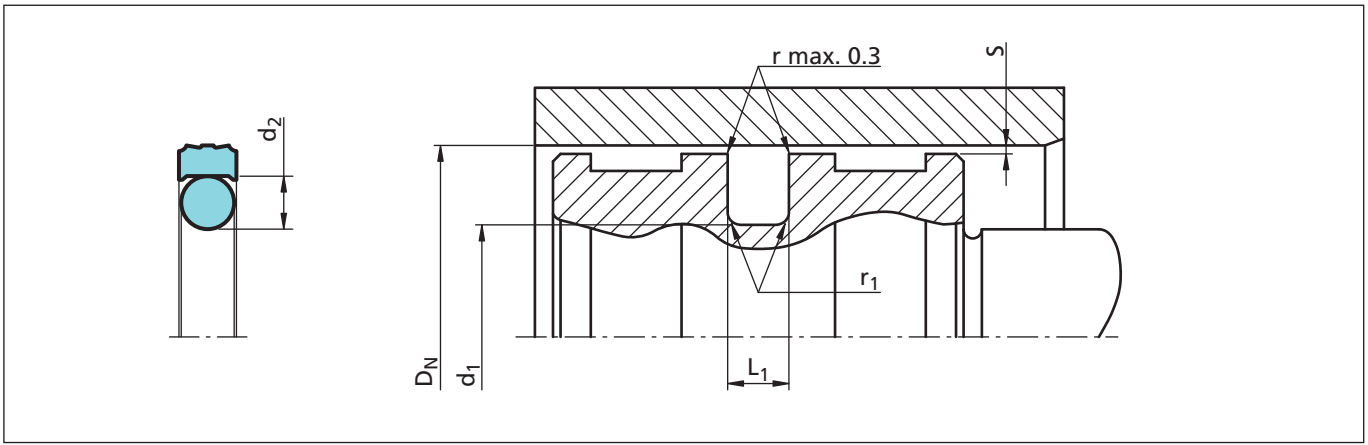

Figure 47 Installation drawing

Table LI Installation dimensions – Standard recommendations

Series No.	Recommended diameter range D_N H9	Available range D_N H9	Groove Diameter d_1 h9	Groove width L_1 +0.2/-0	Radius	Radial Clearance S max.*			O-Ring Cross-Section
					r_1	10 MPa	20 MPa	40 MPa	d_2
PW600	8 - 14.9	8 - 140.0	D_N - 4.9	2.20	0.4	0.40	0.30	0.20	1.78
PW610	15 - 39.9	12 - 140.0	D_N - 7.5	3.20	0.6	0.60	0.50	0.30	2.62
PW620	40 - 79.9	15 - 320.0	D_N - 11.0	4.20	1.0	0.70	0.50	0.30	3.53
PW630	80 - 132.9	40 - 400.0	D_N - 15.5	6.30	1.3	0.80	0.60	0.40	5.33
PW640	133 - 329.9	80 - 700.0	D_N - 21.0	8.10	1.8	0.80	0.60	0.40	7.00
PW680	330 - 669.9	133 - 999.9	D_N - 24.5	8.10	1.8	0.90	0.35	0.50	7.00
PW650	670 - 999.9	330 - 999.9	D_N - 28.0	9.50	2.5	1.00	0.80	0.60	8.40
PW65X	1000 - 1200	-	D_N - 28.0	9.50	2.5	1.00	0.80	0.60	8.40
PW660**	-	670 - 999.9	D_N - 38.0	13.80	3.0	1.20	0.90	0.70	12.00
PW66X**	1000 - 2700***	-	D_N - 38.0	13.80	3.0	1.20	0.90	0.70	12.00

* At pressure > 40 MPa use diameter tolerance H8/f8 (bore/rod) in area of the seal or consult TSS for alternative materials or profiles. TSS Slydring® / Wear Rings are not applicable at very small radical clearance S. Please consult the Slydring® catalog.
** O-Rings with 12 mm cross section are delivered as special profilring. *** Z51 and Z52 max ø 2300 mm.

Ordering example

Zurcon® Wynseal M complete with O-Ring, standard application;

Series: PW630 (from Table LI).
Bore diameter: D_N = 80.0 mm.
TSS Part No.: PW6300800 (from Table LII).

Select the material from Table L.
The corresponding code numbers are appended to the TSS Part No. Together these form the TSS Article Number.

The TSS Article Number for all intermediate sizes not shown in Table LII can be determined following the example.

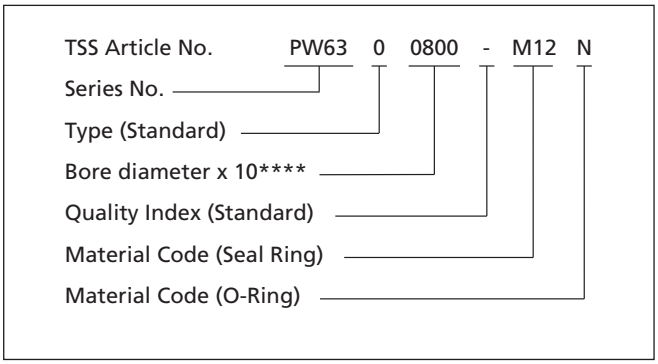

**** For diameters ≥ 1000.0 mm multiply only by factor 1.
Example: PW66X for diameter 1200.0 mm.
TSS Article No.: PW66X1200 - M12N.

Table LII Installation dimensions / TSS Part No.

Bore Dia. D_N H9	Groove Dia. d_1 h9	Groove Width L_1 +0.2	TSS Part No.	O-Ring Dimensions
8.0	3.1	2.2	PW6000080	2.90 x 1.78
10.0	5.1	2.2	PW6000100	4.80 x 1.80
12.0	7.1	2.2	PW6000120	6.70 x 1.80
14.0	9.1	2.2	PW6000140	8.75 x 1.80
15.0	7.5	3.2	PW6100150	7.59 x 2.62
16.0	**11.1**	**2.2**	**PW6000160**	**10.82 x 1.78**
16.0	**8.5**	**3.2**	**PW6100160**	**7.59 x 2.62**
18.0	13.1	2.2	PW6000180	12.42 x 1.78
18.0	10.5	3.2	PW6100180	9.19 x 2.62
20.0	**15.1**	**2.2**	**PW6000200**	**14.00 x 1.78**
20.0	**12.5**	**3.2**	**PW6100200**	**12.37 x 2.62**
22.0	17.1	2.2	PW6000220	17.17 x 1.78
22.0	14.5	3.2	PW6100220	13.94 x 2.62
24.0	16.5	3.2	PW6100240	15.54 x 2.62
25.0	**20.1**	**2.2**	**PW6000250**	**18.77 x 1.78**
25.0	**17.5**	**3.2**	**PW6100250**	**17.12 x 2.62**
25.0	14.0	4.2	PW6200250	13.87 x 3.53
28.0	20.5	3.2	PW6100280	20.29 x 2.62
30.0	22.5	3.2	PW6100300	21.89 x 2.62
32.0	27.1	2.2	PW6000320	26.70 x 1.78
32.0	**24.5**	**3.2**	**PW6100320**	**23.47 x 2.62**
32.0	**21.0**	**4.2**	**PW6200320**	**20.22 x 3.53**
35.0	27.5	3.2	PW6100350	26.64 x 2.62
35.0	24.0	4.2	PW6200350	23.40 x 3.53
36.0	28.5	3.2	PW6100360	28.24 x 2.62
38.0	30.5	3.2	PW6100380	29.82 x 2.62
40.0	**32.5**	**3.2**	**PW6100400**	**31.42 x 2.62**
40.0	**29.0**	**4.2**	**PW6200400**	**28.17 x 3.53**
42.0	31.0	4.2	PW6200420	29.75 x 3.53
45.0	34.0	4.2	PW6200450	32.92 x 3.53
48.0	37.0	4.2	PW6200480	36.09 x 3.53
50.0	42.5	3.2	PW6100500	40.94 x 2.62
50.0	**39.0**	**4.2**	**PW6200500**	**37.70 x 3.53**
50.0	**34.5**	**6.3**	**PW6300500**	**32.69 x 5.33**
52.0	41.0	4.2	PW6200520	40.87 x 3.53
55.0	44.0	4.2	PW6200550	44.04 x 3.53

Bore Dia. D_N H9	Groove Dia. d_1 h9	Groove Width L_1 +0.2	TSS Part No.	O-Ring Dimensions
56.0	**45.0**	**4.2**	**PW6200560**	**44.04 x 3.53**
60.0	49.0	4.2	PW6200600	47.22 x 3.53
63.0	**52.0**	**4.2**	**PW6200630**	**50.39 x 3.53**
63.0	**47.5**	**6.3**	**PW6300630**	**46.99 x 5.33**
65.0	54.0	4.2	PW6200650	53.57 x 3.53
70.0	59.0	4.2	PW6200700	56.74 x 3.53
70.0	54.5	6.3	PW6300700	53.34 x 5.33
75.0	64.0	4.2	PW6200750	63.09 x 3.53
75.0	59.5	6.3	PW6300750	56.52 x 3.53
80.0	**69.0**	**4.2**	**PW6200800**	**66.27 x 3.53**
80.0	**64.5**	**6.3**	**PW6300800**	**62.87 x 5.33**
80.0	59.0	8.1	PW6400800	58 x 7.00
85.0	69.5	6.3	PW6300850	69.22 x 5.33
85.0	64.0	8.1	PW6400850	63 x 7.00
90.0	79.0	4.2	PW6200900	78.97 x 3.53
90.0	74.5	6.3	PW6300900	72.39 x 5.33
90.0	69.0	8.1	PW6400900	68 x 7.00
95.0	84.0	4.2	PW6200950	82.14 x 3.53
95.0	79.5	6.3	PW6300950	78.74 x 5.33
95.0	74.0	8.1	PW6400950	73 x 7.00
100.0	89.0	4.2	PW6201000	88.49 x 3.53
100.0	**84.5**	**6.3**	**PW6301000**	**81.92 x 5.33**
100.0	79.0	8.1	PW6401000	78 x 7.00
105.0	94.0	4.2	PW6201050	91.67 x 3.53
105.0	89.5	6.3	PW6301050	88.27 x 5.33
110.0	99.0	4.2	PW6201100	98.02 x 3.53
110.0	94.5	6.3	PW6301100	91.44 x 5.33
110.0	89.0	8.1	PW6401100	88 x 7.00
115.0	99.5	6.3	PW6301150	97.79 x 5.33
120.0	109.0	4.2	PW6201200	107.54 x 3.53
120.0	104.5	6.3	PW6301200	100.97 x 5.33
120.0	99.0	8.1	PW6401200	98 x 7.00
125.0	114.0	4.2	PW6201250	113.89 x 3.53
125.0	**109.5**	**6.3**	**PW6301250**	**107.32 x 5.33**
125.0	**104.0**	**8.1**	**PW6401250**	**103 x 7.00**
130.0	114.5	6.3	PW6301300	113.67 x 5.33

Bore Dia.	Groove Dia.	Groove Width	TSS Part No.	O-Ring Dimensions
D_N H9	d_1 h9	L_1 +0.2		
130.0	109.0	8.1	PW6401300	108 x 7.00
135.0	114.0	8.1	PW6401350	113.67 x 7.00
140.0	124.5	6.3	PW6301400	123.19 x 5.33
140.0	119.0	8.1	PW6401400	116.84 x 7.00
150.0	134.5	6.3	PW6301500	132.72 x 5.33
150.0	129.0	8.1	PW6401500	126.37 x 7.00
160.0	**144.5**	**6.3**	**PW6301600**	**142.24 x 5.33**
160.0	**139.0**	**8.1**	**PW6401600**	**135.89 x 7.00**
170.0	149.0	8.1	PW6401700	145.42 x 7.00
180.0	164.5	6.3	PW6301800	164.47 x 5.33
180.0	159.0	8.1	PW6401800	158.12 x 7.00
190.0	169.0	8.1	PW6401900	164.47 x 7.00
200.0	**184.5**	**6.3**	**PW6302000**	**183.52 x 5.33**
200.0	**179.0**	**8.1**	**PW6402000**	**177.17 x 7.00**
210.0	189.0	8.1	PW6402100	183.52 x 7.00
220.0	199.0	8.1	PW6402200	196.22 x 7.00
230.0	214.5	6.3	PW6302300	208.92 x 5.33
230.0	209.0	8.1	PW6402300	208.92 x 7.00
240.0	219.0	8.1	PW6402400	215.27 x 7.00
250.0	229.0	8.1	PW6402500	227.97 x 7.00
250.0	**225.5**	**8.1**	**PW6802500**	**215.27 x 7.00**
250.0	**134.5**	**6.3**	**PW6302500**	**234.32 x 5.33**
260.0	239.0	8.1	PW6402600	240.67 x 7.00
270.0	249.0	8.1	PW6402700	240.67 x 7.00
280.0	259.0	8.1	PW6402800	253.37 x 7.00
290.0	269.0	8.1	PW6402900	266.07 x 7.00
300.0	279.0	8.1	PW6403000	278.77 x 7.00
300.0	275.5	8.1	PW6803000	266.07 x 7.00
320.0	**299.0**	**8.1**	**PW6403200**	**291.47 x 7.00**
320.0	**295.5**	**8.1**	**PW6803200**	**291.47 x 7.00**
350.0	325.5	8.1	PW6803500	316.87 x 7.00
360.0	335.5	8.1	PW6803600	329.57 x 7.00
380.0	355.5	8.1	PW6803800	354.97 x 7.00
400.0	**375.5**	**8.1**	**PW6804000**	**367.67 x 7.00**
450.0	425.5	8.1	PW6804500	417.96 x 7.00
500.0	**475.5**	**8.1**	**PW6805000**	**468.76 x 7.00**

Bore Dia.	Groove Dia.	Groove Width	TSS Part No.	O-Ring Dimensions
D_N H9	d_1 h9	L_1 +0.2		
600.0	575.5	8.1	PW6806000	557.66 x 7.00
700.0	672.0	9.5	PW6507000	670 x 8.40
780.0	752.0	9.5	PW6507800	750 x 8.40
800.0	772.0	9.5	PW6508000	770 x 8.40
900.0	872.0	9.5	PW6509000	870 x 8.40
1000.0	972.0	9.5	PW65X1000	970 x 8.40
1000.0	962.0	13.8	PW66X1000	960 x 12.00
1200.0	1172.0	9.5	PW65X1200	1170 x 8.40
1200.0	1162.0	13.8	PW66X1200	1160 x 12.00
1500.0	1462.0	13.8	PW66X1500	1460 x 12.00
2000.0	1962.0	13.8	PW66X2000	1960 x 12.00
2700.0	2662.0	13.8	PW66X2700	2660 x 12.00

The bore diameters in **bold** type comply with the recommendations of ISO 3320.

Other dimensions and all intermediate sizes up to 2700 mm diameter including imperial (inch) sizes can be supplied.

All O-Rings with 12 mm cross section are delivered as special profilring.

POLYPAC® - PHD/P

Double Acting

Heavy Duty, High Pressure

Excellent Leakage Control

Material:
Zurcon®, NBR Elastomer + POM

■ PHD/P Seal

Description

The PHD/P Seal is a high-pressure heavy-duty piston seal with excellent leakage control and superior extrusion and wear resistance

The PHD/P seal is a combination of a Zurcon® polyurethane slipper seal energised by an elastomer profile ring and completed with two Back-up rings (POM). It is manufactured with a predefined interference fit, which together with the squeeze of the elastomer part ensures a good sealing effect even at low system pressure. At higher pressures the elastomer part is energised by the system pressure and consequently activates the slipper seal in the radial direction.

The Back-up rings prevent the slipper seal from extrusion and ensure a long service life even under harsh conditions.

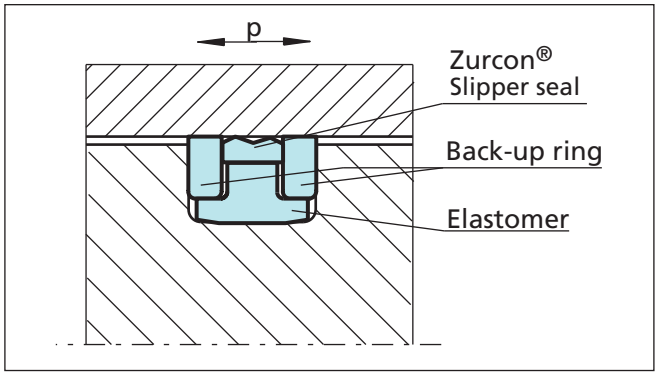

Figure 48 PHD/P Seal

Advantages

- Simple groove design
- Excellent sealing effect
- Excellent wear resistance
- Increased clearance possible
- Long service life

Application Examples

The PHD/P Seal is the recommended sealing element for double acting pistons of hydraulic cylinders working in very harsh conditions such as:

- Excavators
- Heavy duty cylinders

Technical Data

Operating conditions

Pressure:	Up to 40 MPa Peak pressure up to 60 MPa
Speed:	Up to 0.5 m/s
Temperature:	-35 °C to +110 °C
Media:	Mineral oil based hydraulic fluids
Clearance:	The maximum permissible radial clearance S_{max} is shown in Table LIII, as a function of the operating pressure and functional diameter.

Important Note:
The above data are maximum values and cannot be used at the same time. e.g. the maximum operating speed depends on material type, pressure, temperature and gap value.
Temperature range also dependent on medium.

Materials

Standard Application:

For hydraulic components in mineral oils or medium with good lubricating performance.

Slipper Seal:	Zurcon® Z20 93 Shore A
Energiser:	NBR 80 Shore A
Back-up rings:	POM
Material code for the set:	Z2053

■ Installation Recommendation

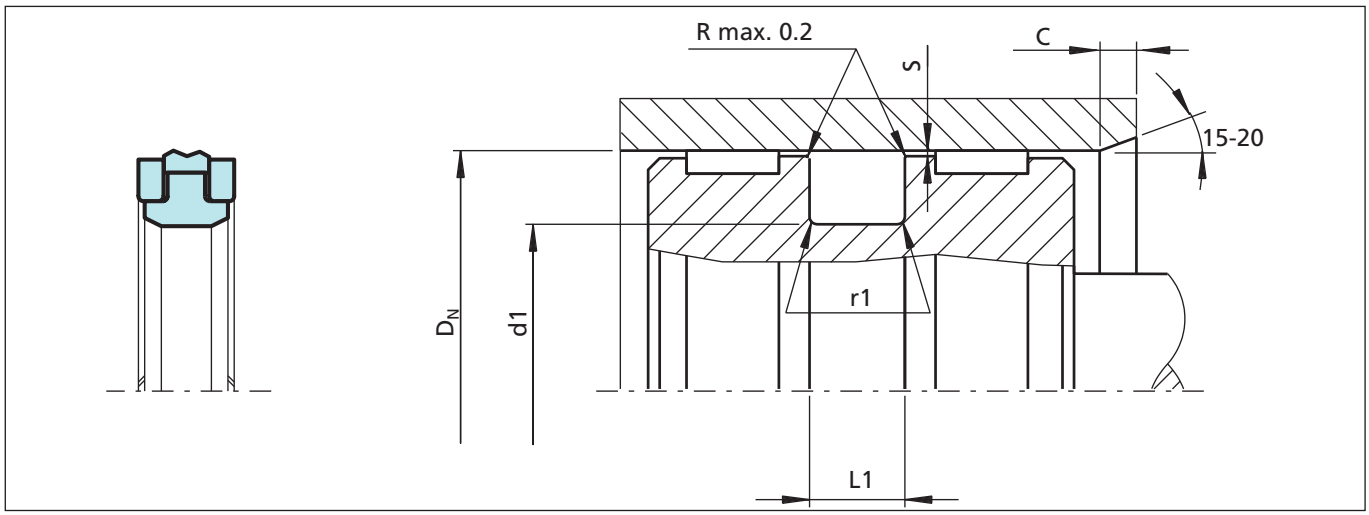

Figure 49 Installation drawing

Ordering Example

PHD/P Seal, complete.
Bore diameter: D_N = 80.0 mm
TSS Part No. PKP0P0800 (from Table LIII)
Material set-code: Z2053
Polypac Ref. No.: PHD 8065P

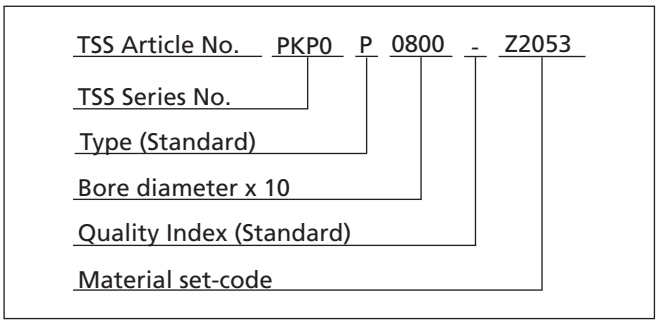

Table LIII Installation dimensions / TSS Part No.

Bore Dia.	Groove Dia.	Groove Width	Inlet Chamfer	Radius	TSS Article No.	Polypac Ref. No.
D_N H9	**d1** h9	**L1** +0.2	**C**	**r1**		
50.0	36.0	9.0	5.0	0.3	PKP0P0500-Z2053	PHD 5036P-Z20
55.0	41.0	9.0	5.0	0.3	PKP0P0550-Z2053	PHD 5541P-Z20
60.0	46.0	9.0	5.0	0.3	PKP0P0600-Z2053	PHD 6046P-Z20
63.0	48.0	11.0	5.0	0.5	PKP0P0630-Z2053	PHD 6348P-Z20
65.0	50.0	11.0	5.0	0.5	PKP0P0650-Z2053	PHD 6550P-Z20
70.0	55.0	11.0	5.0	0.5	PKP0P0700-Z2053	PHD 7055P-Z20
75.0	60.0	11.0	5.0	0.5	PKP0P0750-Z2053	PHD 7560P-Z20
80.0	65.0	11.0	5.0	0.5	PKP0P0800-Z2053	PHD 8065P-Z20
85.0	70.0	11.0	5.0	0.5	PKP0P0850-Z2053	PHD 8570P-Z20

Radial Clearance (S): For pressure up to 35 MPa 0.50 For pressure from 35 MPa up to 60 MPa 0.30

Bore Dia.	Groove Dia.	Groove Width	Inlet Chamfer	Radius	TSS Article No.	Polypac Ref. No.
D_N H9	**d1** h9	**L1** +0.2	**C**	**r1**		
90.0	75.0	11.0	5.0	0.5	PKP0P0900-Z2053	PHD 9075P-Z20
95.0	80.0	12.5	5.0	0.5	PKP0P0950-Z2053	PHD 9580P-Z20
100.0	85.0	12.5	5.0	0.5	PKP0P1000-Z2053	PHD 10085P-Z20
105.0	90.0	12.5	5.0	0.5	PKP0P1050-Z2053	PHD 10590P-Z20
110.0	95.0	12.5	5.0	0.5	PKP0P1100-Z2053	PHD 11095P-Z20
115.0	100.0	12.5	5.0	0.5	PKP0P1150-Z2053	PHD 115100P-Z20
120.0	105.0	12.5	5.0	0.5	PKP0P1200-Z2053	PHD 120105P-Z20
125.0	102.0	16.0	6.5	0.6	PKP0P1250-Z2053	PHD 125102P-Z20
130.0	107.0	16.0	6.5	0.6	PKP0P1300-Z2053	PHD 130107P-Z20
135.0	112.0	16.0	6.5	0.6	PKP0P1350-Z2053	PHD 135112P-Z20
140.0	117.0	16.0	6.5	0.6	PKP0P1400-Z2053	PHD 140117P-Z20
145.0	122.0	16.0	6.5	0.6	PKP0P1450-Z2053	PHD 145122P-Z20
150.0	127.0	16.0	6.5	0.6	PKP0P1500-Z2053	PHD 150127P-Z20
155.0	132.0	16.0	6.5	0.6	PKP0P1550-Z2053	PHD 155132P-Z20
160.0	137.0	16.0	6.5	0.6	PKP0P1600-Z2053	PHD 160137P-Z20
165.0	142.0	16.0	6.5	0.6	PKP0P1650-Z2053	PHD 165142P-Z20
170.0	147.0	16.0	6.5	0.6	PKP0P1700-Z2053	PHD 170147P-Z20
180.0	157.0	16.0	6.5	0.6	PKP0P1800-Z2053	PHD 180157P-Z20

Radial Clearance (S): For pressure up to 35 MPa 0.50 For pressure from 35 MPa up to 60 MPa 0.30

Compact Seal
D A S Type A/B
POLYPAC® - DBM

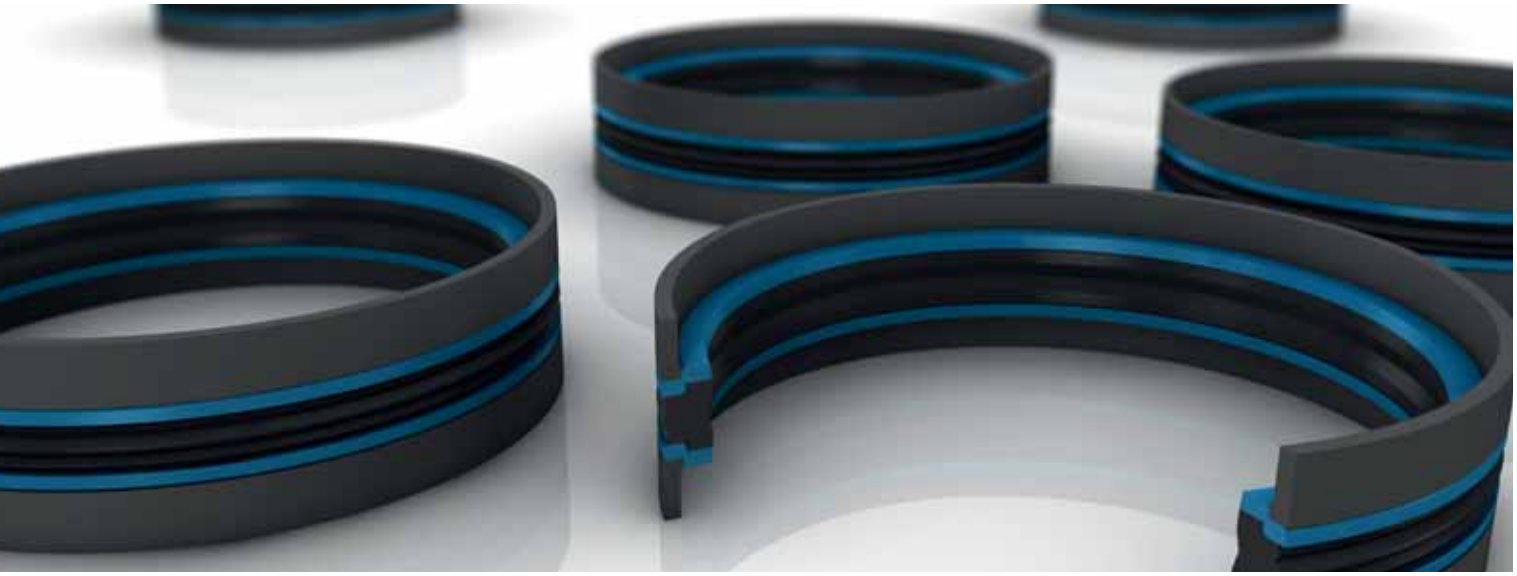

Double Acting

Combined Seal and
Guide Element

Material:
NBR, Polyester Elastomer + POM

■ Compact Piston Seals

Description

The Compact Seal is a double-acting seal and guide element comprising an elastomeric profile seal ring, two back-up rings and two guide rings. The profile seal ring seals in both the static and dynamic range whilst the back-up rings prevent extrusion into the sealing gap. The function of the guide rings is to guide the piston in the cylinder tube and to absorb transverse forces. The design provides a compact seal and guide combination for a closed or split installation groove.

Designs

The Compact Seal is available in various profile geometries which are in practical use. The choice is normally determined by the existing installation grooves.

DAS Type A

This type is characterized by the straight, long-sided L-profiles of the guide rings. Compared with Type B, it exhibits a smaller groove depth with the same cylinder diameter.

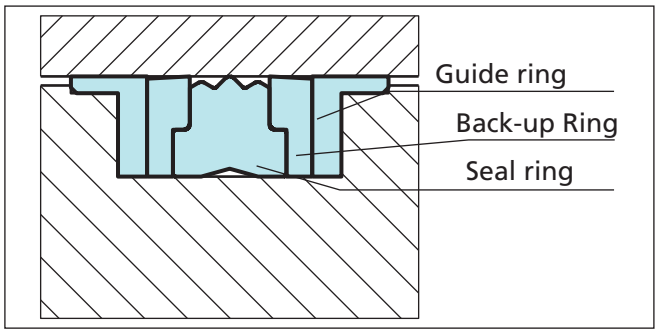

Figure 50 D-A-S Compact Seal, Type A

DAS Type B

This type is characterized by a Z-shaped back-up ring which forms a chamber with the elastomer seal ring on the inside and is centered on the outside by the guide ring.

For many piston diameters, the width of the guide ring (dimension L2) can be selected due to sideloads.

Due to the larger groove depth, the profile of the seal ring is more rigid than that of Type A and requires higher installation forces.

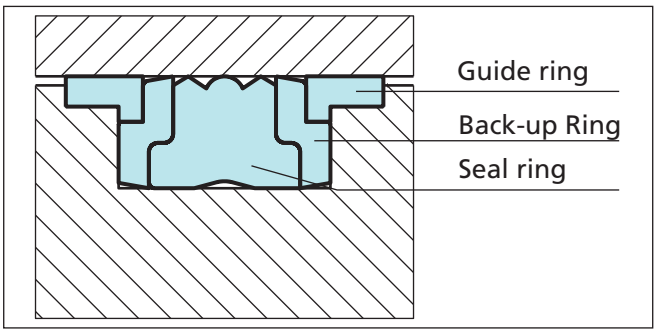

Figure 51 D-A-S Compact Seal, Type B

Polypac® DBM

The DBM Compact seal profile is characterized by a concave-shaped Back-up ring that prevents the elastomer profile ring from deformation and/or extrusion. The Back-up ring is centered on the outside by the guide ring.

Option

Polypac DBM is as option available without L-shape wear rings, but with Back-up Rings. If DBM/NEO is installed as piston sealing system, additional Slydring®/wear rings are required.

Polypac type: DBM/NEO
Consult TSS for available sizes

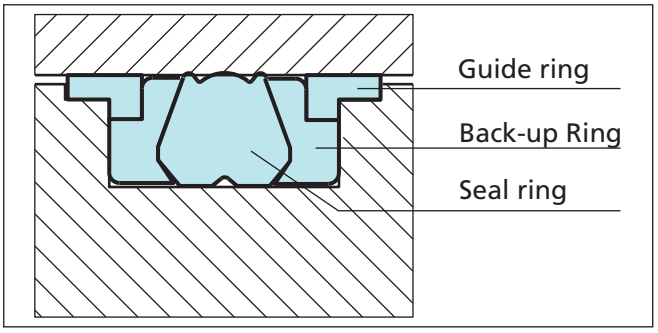

Figure 52 DBM Compact Seal

Advantages

- Good sealing effect, also suitable for holding cylinders
- Capable of installation in closed grooves for reduced machining costs
- Economic sealing and guiding solution
- Simple snap installation.

Application Examples

The Compact seals are the recommended sealing element for double acting pistons of hydraulic components such as:

- Machine tools
- Truck cranes
- Forklifts & handling machinery
- Agriculture equipment

Technical Data

Operating conditions

Pressure:	Up to 35 MPa peak up to 40 MPa
Speed:	Up to 0.5 m/s
Temperature:	-30 °C to +100 °C
Media:	Mineral oil-based hydraulic fluids, flame retardant hydraulic fluids, HFA, HFB, HFC (< +40 °C)

Important Note:
The above data are maximum values and cannot be used at the same time. e.g. the maximum operating speed depends on material type, pressure, temperature and gap value.
Temperature range also dependent on medium.

Materials

- The D-A-S Compact Seal is available in the following material combinations:

Profile seal:	NBR 70 Shore A
Back-up Ring:	Polyester elastomer
Guide rings:	HM061
Set ref.:	NCRO

- The DBM Compact Seal is available in the following material combination:

Profile seal:	NBR 80 Shore A
Back-up Ring:	Polyester elastomer
Guide rings:	POM
Set reference:	N8RO

■ Installation Recommendation, DAS Type A

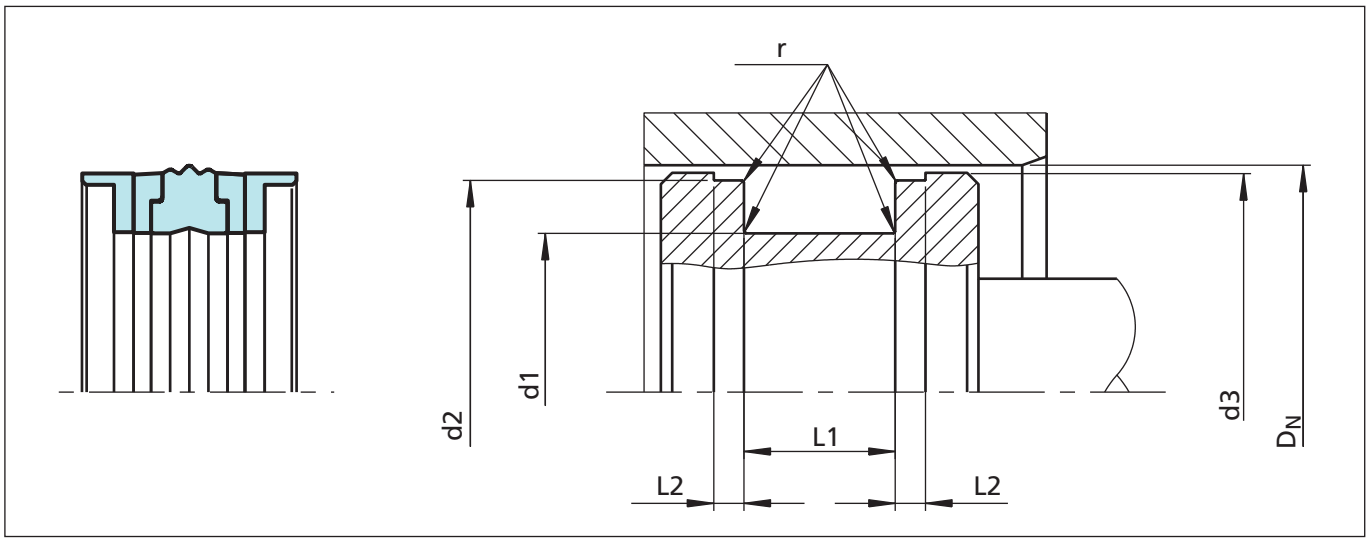

Figure 53 Installation drawing

Table LIV Installation dimensions / TSS Article No.

Bore Dia.	Groove Dimensions						TSS Article No.	Description
D_N H9	**d1** h9	**d2** h9	**L1** +0.2	**d3** h11	**L2** +0.1	**r max**		
32.0	24.0	28.0	15.5	31.4	3.2	0.3	PCA200320-NCRO	DAS 32 24
40.0	32.0	36.0	15.5	39.4	3.2	0.3	PCA400400-NCRO	DAS 40 32
50.0	38.0	46.0	20.5	49.4	4.2	0.3	PCA200500-NCRO	DAS 50 38
60.0	48.0	56.0	20.5	59.4	4.2	0.3	PCA200600-NCRO	DAS 60 48
63.0	51.0	59.0	20.5	63.4	4.2	0.3	PCA300630-NCRO	DAS 63 51
70.0	58.0	66.0	20.5	69.4	4.2	0.3	PCA200700-NCRO	DAS 70 58
80.0	66.0	76.0	22.5	79.4	5.2	0.3	PCA200800-NCRO	DAS 80 66
90.0	76.0	86.0	22.5	89.4	5.2	0.3	PCA200900-NCRO	DAS 90 76
100.0	86.0	96.0	22.5	99.4	5.2	0.3	PCA201000-NCRO	DAS 100 86
110.0	96.0	106.0	22.5	109.4	5.2	0.3	PCA201100-NCRO	DAS 110 96
120.0	106.0	116.0	22.5	119.4	5.2	0.8	PCA101200-NCRO	DAS 120 106
125.0	108.0	121.0	26.5	124.4	7.2	0.8	PCA201250-NCRO	DAS 125 108
130.0	113.0	126.0	26.5	129.4	7.2	0.8	PCA201300-NCRO	DAS 130 113
140.0	123.0	136.0	26.5	139.4	7.2	0.8	PCA301400-NCRO	DAS 140 123
150.0	133.0	146.0	26.5	149.4	7.2	0.8	PCA301500-NCRO	DAS 150 133
160.0	143.0	156.0	26.5	159.4	7.2	0.8	PCA301600-NCRO	DAS 160 143

■ Installation Recommendation, DAS Type B and Polypac® DBM

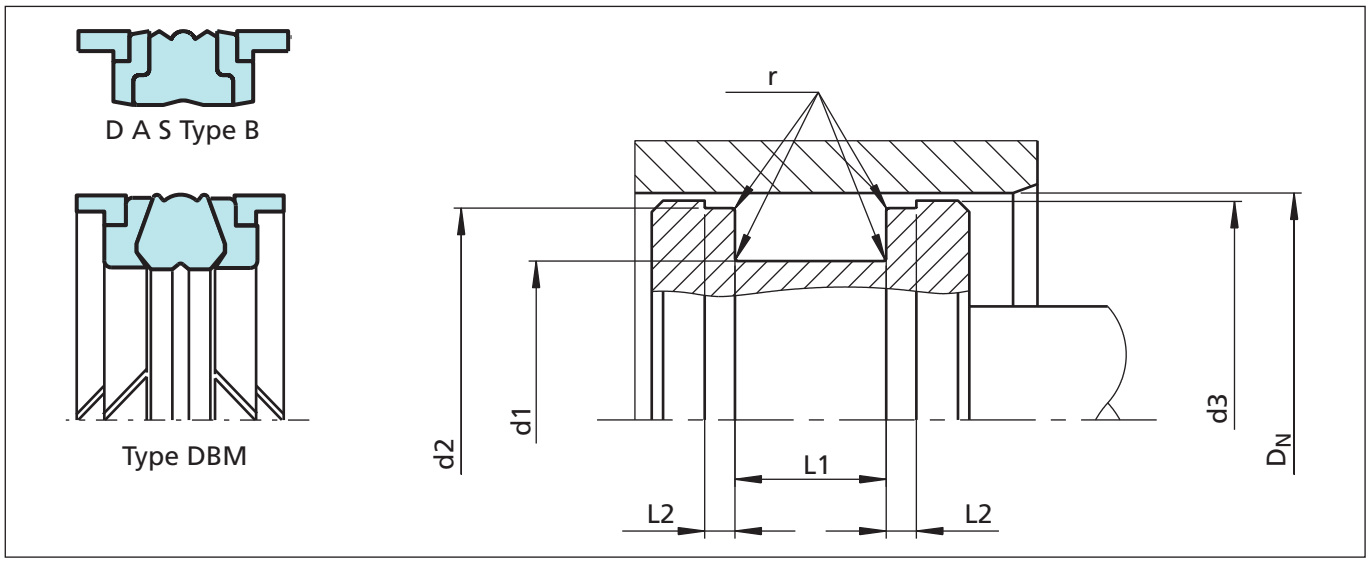

Figure 54 Installation drawing

Ordering Example

Bore diameter: D_N = 80.0 mm
Groove diameter: d1 = 60.0 mm
Groove width: L1 = 22.4 mm

DAS Type B

TSS Article No. PCBO A 0800 - NCRO

- TSS Series No. — PCBO
- Execution code — A
- Bore diameter x 10 — 0800
- Quality Index (Standard) — -
- Material set-code — NCRO

Sealing Parts Ref. No.: DAS 8060

Polypac DBM

TSS Article No. PCBO A 0800 - N8RO

- TSS Series No. — PCBO
- Execution code — A
- Bore diameter x 10 — 0800
- Quality Index (Standard) — -
- Material set-code — N8RO

Polypac Ref. No.: DBM 314236

Table LV Installation dimensions / TSS Article No.

Bore Diameter	Groove Dimensions						TSS Part No.	Description	
								Material code	
D_N H9	**d1** h9	**L1** +0.2	**d2** h9	**d3** h11	**L2** +0.1	**r max**		**N8RO**	**NCRO**
20.0	11.00	13.50	17.00	19.00	2.10	0.40	PCB0N0200		DAS 20 11
22.0	13.00	13.50	19.00	21.00	2.10	0.40	PCB0N0220		DAS 22 13
25.0	15.00	12.00	21.00	23.00	4.00	0.40	PCB0D0250		DAS 25 15/1
25.0	**15.00**	**12.50**	**22.00**	**24.00**	**4.00**	**0.40**	**PCB0N0250**		**DAS 25 15/2**
25.0	15.00	16.40	21.45	23.50	6.35	0.40	PCB1N0250	DBM 098059	DAS 25 15
25.0	16.00	13.50	22.00	24.00	2.10	0.40	PCB2N0250		DAS 25 16
28.0	19.00	13.50	25.00	27.00	2.10	0.40	PCB0N0280		DAS 28 19
30.0	17.00	15.40	26.50	28.50	6.35	0.40	PCB000300	DBM 118066	DAS 30 21
30.0	21.00	13.50	27.00	29.00	2.10	0.40	PCB0A0300		
32.0	22.00	15.50	28.00	31.00	2.60	0.40	PCB0B0320		DAS 32 22/1
32.0	22.00	16.40	28.50	30.50	6.35	0.40	PCB1A0320	DBM 125086	DAS 32 22
35.0	25.00	15.50	31.00	34.00	2.60	0.40	PCB0B0350		DAS 35 25/1
35.0	25.00	16.40	31.40	33.50	6.35	0.40	PCB1A0350	DBM 137098	DAS 35 25
40.0	24.00	18.40	35.40	38.50	6.35	0.40	PCB0A0400	DBM 157094	DAS 40 24
40.0	26.00	15.50	36.00	39.00	2.60	0.40	PCB1A0400	DBM 157102/M	DAS 40 26
40.0	30.00	12.50	36.00	38.00	4.00	0.40	PCB2D0400		DAS 40 30/1
40.0	**30.00**	**12.50**	**37.00**	**39.00**	**4.00**	**0.40**	**PCB2E0400**		**DAS 40 30/2**
40.0	30.00	16.40	35.40	38.50	6.35	0.40	PCB3A0400	DBM 157118	DAS 40 30
42.0	28.00	15.50	38.00	41.00	2.60	0.40	PCB0N0420		DAS 42 28
45.0	29.00	18.40	40.40	43.50	6.35	0.40	PCB0N0450	DBM 177114	DAS 45 29
45.0	31.00	15.50	41.00	44.00	2.60	0.40	PCB1A0450		DAS 45 31
45.0	35.00	16.40	40.40	43.50	6.35	0.40	PCB2N0450	DBM 177137	DAS 45 35
50.0	34.00	18.40	45.40	48.50	6.35	0.40	PCB1A0500	DBM 196133	DAS 50 34
50.0	34.00	20.50	46.00	49.00	3.10	0.40	PCB0B0500	DBM 196133/M	DAS 50 34/1
55.0	39.00	18.40	50.36	53.50	6.35	0.40	PCB1A0550	DBM 216153	DAS 55 39
55.0	39.00	20.50	51.00	54.00	3.10	0.40	PCB0B0550		DAS 55 39/1
56.0	40.00	20.50	52.00	55.00	3.10	0.40	PCB0A0560		DAS 56 40
60.0	44.00	18.40	55.40	58.50	6.35	0.40	PCB1A0600	DBM 236173	DAS 60 44
60.0	44.00	20.50	56.00	59.00	3.10	0.40	PCB0B0600	DBM 236173/M	DAS 60 44/1
63.0	47.00	18.40	58.40	61.50	6.35	0.40	PCB1A0630	DBM 248185	DAS 63 47
63.0	47.00	19.40	58.40	61.50	6.35	0.40	PCB2C0630		DAS 63 47/2
63.0	47.00	20.50	59.00	62.00	3.10	0.40	PCB0B0630	DBM 248185/M	DAS 63 47/1
65.0	49.00	20.50	61.00	64.00	3.10	0.40	PCB0N0650	DBM 255192/M	DAS 65 49

* TSS mold available, same ref. as TSS Part No.
The listed products are technically equivalent but availability and pricing may vary.
The bore diameters in **bold** type comply with the recommendations of ISO 6547.
Imperial (inch) sizes can be supplied.

Bore Diameter	Groove Dimensions						TSS Part No.	Description	
								Material code	
D_N H9	**d1** h9	**L1** +0.2	**d2** h9	**d3** h11	**L2** +0.1	**r max**		**N8RO**	**NCRO**
65.0	50.00	18.40	60.40	63.50	6.35	0.40	PCB1A0650	DBM 255196	DAS 65 50
70.0	50.00	22.40	64.20	68.30	6.35	0.40	PCB0A0700	DBM 275196	DAS 70 50
70.0	54.00	20.50	66.00	69.00	3.10	0.40	PCB1N0700	DBM 275212/M	DAS 70 54
75.0	55.00	22.40	69.20	73.30	6.35	0.40	PCB0A0750	DBM 295216	DAS 75 55
75.0	59.00	20.50	71.00	74.00	3.10	0.40	PCB1A0750		DAS 75 59
80.0	60.00	22.40	74.15	78.30	6.35	0.40	PCB0A0800	DBM 314236	DAS 80 60
80.0	62.00	22.50	76.00	79.00	3.60	0.40	PCB1A0800	DBM 314244/M	DAS 80 62
85.0	65.00	22.40	79.15	83.30	6.35	0.40	PCB0A0850	DBM 334255	DAS 85 65
90.0	70.00	22.40	84.15	88.30	6.35	0.40	PCB0A0900	DBM 354275	DAS 90 70
90.0	72.00	22.50	86.00	89.00	3.60	0.40	PCB1A0900		DAS 90 72
95.0	75.00	22.40	89.15	93.30	6.35	0.40	PCB0A0950	DBM 374295	DAS 95 75
100.0	75.00	22.40	93.15	98.00	6.35	0.40	PCB0A1000	DBM 393295	DAS 100 75
100.0	82.00	22.50	96.00	99.00	3.60	0.40	PCB1A1000	DBM 393332/M	DAS 100 82
105.0	80.00	22.40	98.10	103.00	6.35	0.40	PCB0A1050	DBM 413314	DAS 105 80
110.0	85.00	22.40	103.10	108.00	6.35	0.40	PCB0A1100	DBM 433334	DAS 110 85
110.0	92.00	22.50	106.00	109.00	3.60	0.40	PCB1A1100		DAS 110 92
115.0	90.00	22.40	108.10	113.00	6.35	0.40	PCB0A1150	DBM 452354	DAS 115 90
115.0	97.00	22.50	111.00	114.00	3.60	0.40	PCB1N1150		DAS 115 97
120.0	95.00	22.40	113.10	118.10	6.35	0.80	PCB0A1200	DBM 472374	DAS 120 95
125.0	100.00	25.40	118.10	123.00	6.35	0.80	PCB0A1250	DBM 492393	DAS 125 100
125.0	103.00	26.50	121.00	124.00	5.10	0.80	PCB1A1250	DBM 492405/M	DAS 125 103
130.0	105.00	25.40	123.10	128.00	6.35	0.80	PCB0B1300		DAS 130 105/1
130.0	105.00	25.40	122.60	127.50	9.50	0.80	PCB1A1300	DBM 511413	DAS 130 105
133.0	115.00	22.40	125.60	130.50	9.52	0.80	PCB001330	DBM 523452	
135.0	110.00	25.40	128.10	133.00	6.35	0.80	PCB0B1350		DAS 135 110/1
135.0	110.00	25.40	127.60	132.50	9.50	0.80	PCB1A1350	DBM 531433	DAS 135 110
140.0	115.00	25.40	133.00	138.00	6.35	0.80	PCB0B1400		DAS 140 115/1
140.0	115.00	25.40	132.60	137.50	9.50	0.80	PCB1A1400	DBM 551452	DAS 140 115
140.0	118.00	26.50	136.00	139.00	5.10	0.80	PCB2A1400	DBM 551464/M	DAS 140 118
145.0	120.00	25.40	138.30	142.95	6.35	0.80	PCB0B1450		DAS 145 120/1
145.0	120.00	25.40	137.60	142.50	9.50	0.80	PCB1A1450	DBM 570472	DAS 145 120
150.0	125.00	25.40	142.60	147.50	9.50	0.80	PCB1A1500	DBM 590492	DAS 150 125
150.0	125.00	25.40	143.00	148.00	6.35	0.80	PCB0B1500		DAS 150 125/1
150.0	128.00	26.50	146.00	149.00	5.10	0.80	PCB2A1500		DAS 150 128
152.4	127.00	31.75	145.00	149.91	9.50	0.80	PCB001524	DBM 600500	
155.0	130.00	25.40	147.60	152.50	9.50	0.80	PCB0A1550	DBM 610511	DAS 155 130

* TSS mold available, same ref. as TSS Part No.
The listed products are technically equivalent but availability and pricing may vary.
The bore diameters in **bold** type comply with the recommendations of ISO 6547.
Imperial (inch) sizes can be supplied.

Bore Diameter	Groove Dimensions						TSS Part No.	Description	
								Material code	
D_N H9	**d1** h9	**L1** +0.2	**d2** h9	**d3** h11	**L2** +0.1	**r max**		**N8RO**	**NCRO**
155.0	130.00	25.40	148.00	153.00	6.35	0.80	PCB1B1550		DAS 155 130/1
160.0	130.00	25.40	153.00	157.50	6.35	0.80	PCB0A1600		DAS 160 130
160.0	130.00	25.40	152.60	157.50	9.50	0.80	PCB3A1600	DBM 629511	DAS 160 130/1
160.0	135.00	25.40	152.60	157.50	9.50	0.80	PCB1A1600	DBM 629531	DAS 160 135
160.0	138.00	26.50	156.00	159.00	5.10	0.80	PCB2A1600		DAS 160 138
165.0	140.00	25.40	157.60	162.50	9.50	0.80	PCB0A1650	DBM 649551	DAS 165 140
170.0	145.00	25.40	161.70	167.10	12.70	0.80	PCB0A1700	DBM 669570	DAS 170 145
170.0	148.00	26.50	166.00	169.00	5.10	0.80	PCB1A1700		DAS 170 148
175.0	150.00	25.40	166.70	172.10	12.70	0.80	PCB0A1750	DBM 688590	DAS 175 150
180.0	150.00	35.40	172.95	177.87	6.35	0.80	PCB0A1800		DAS 180 150
180.0	155.00	25.40	171.70	177.10	12.70	0.80	PCB1A1800	DBM 708610	DAS 180 155
185.0	160.00	25.40	176.70	182.10	12.70	0.80	PCB0A1850	DBM 728629	DAS 185 160
190.0	165.00	25.40	181.70	187.00	12.70	0.80	PCB0A1900	DBM 748649	DAS 190 165
195.0	170.00	25.40	186.70	192.00	12.70	0.80	PCB0A1950	DBM 767669	DAS 195 170
200.0	175.00	25.40	191.60	197.00	12.70	0.80	PCB0A2000	DBM 787688	DAS 200 175
200.0	175.00	31.50	196.00	199.00	6.60	0.80	PCB102000	DBM 787688/M	
210.0	185.00	25.40	201.60	207.00	12.70	0.80	PCB0A2100	DBM 826728	DAS 210 185
220.0	190.00	35.40	212.70	217.90	6.35	0.80	PCB0A2200		DAS 220 190
220.0	195.00	25.40	211.60	217.00	12.70	0.80	PCB1A2200	DBM 866767	DAS 220 195
230.0	205.00	25.40	221.60	227.00	12.70	0.80	PCB0A2300	DBM 905807	DAS 230 205
240.0	215.00	25.40	231.60	237.00	12.70	0.80	PCB0A2400	DBM 944846	DAS 240 215
250.0	220.00	35.40	242.90	247.85	6.35	0.80	PCB0A2500		DAS 250 220
250.0	225.00	25.40	241.60	247.00	12.70	0.80	PCB1A2500	DBM 984886	DAS 250 225

* TSS mold available, same ref. as TSS Part No.
The listed products are technically equivalent but availability and pricing may vary.
The bore diameters in **bold** type comply with the recommendations of ISO 6547.
Imperial (inch) sizes can be supplied.

Zurcon® Compact Seals

Double Acting

Combined Seal and
Guide Element

Material:
Zurcon®, NBR + POM

■ PU DAS and Polypac® EUD

Description

The Compact Seals are double-acting piston seals with integrated guide rings . The combination of the elastomer energiser and the polyurethane special shaped sealing element provide excellent sealing effect and service life. The function of the guide rings is to guide the piston in the cylinder tube and to absorb transverse forces.

Type PU DAS

For the Compact Seal PU DAS is designed without Back-up rings. For easy installation in closed grooves, the combination into one stiff sealing element and one soft energizing element is required. Back-up rings are unnecessary thanks to the high extrusion resistance of the polyurethane material.

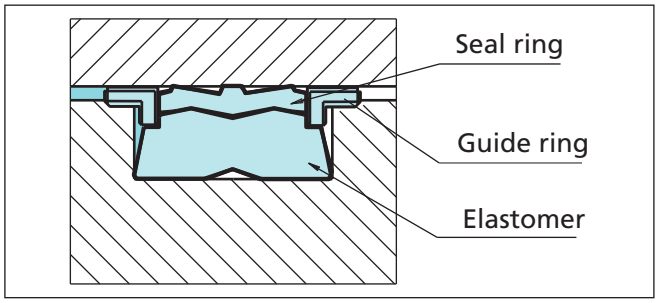

Figure 55 Compact Seal, Type PU DAS

Type Polypac® EUD

The Compact Seal EUD design includes T-shaped Back-up/ guide rings and a combination of seal ring and energiser.

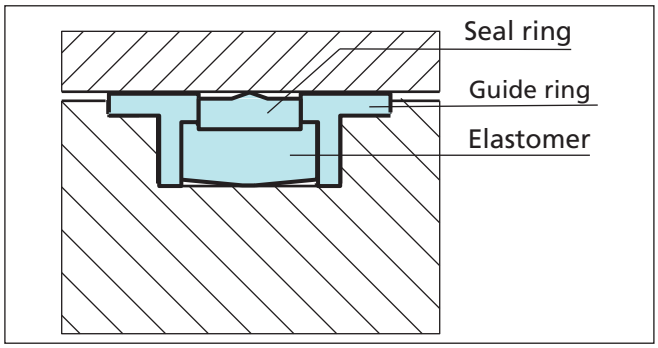

Figure 56 Compact Seal, Type EUD

Advantages

- High wear resistance
- Low compression set
- Optimal leakage control
- Easy installation into closed grooves
- Excellent service life

Application Examples

The Zurcon® Compact seals are the recommended sealing element for double acting pistons of hydraulic cylinders for:

- Truck cranes
- Mini excavators
- Heavy duty cylinders

Technical Data

Operating conditions

Pressure:	Up to 40 MPa
Speed:	Up to 0.5 m/s
Temperature:	-35 °C to +110 °C
Media:	Mineral oil based hydraulic fluids

Important Note:
The above data are maximum values and cannot be used at the same time. e.g. the maximum operating speed depends on material type, pressure, temperature and gap value.
Temperature range also dependent on medium.

Materials

- The Polyurethane Compact seals PU DAS and EUD are available in the following composition:

Sealing ring:	Zurcon® Polyurethane 93 Shore A	
Energiser:	NBR	
	70 Shore A	Type PU DAS
	78 Shore A	Type EUD
Guide rings:	HM061	Type PU DAS
	POM	Type EUD
Set references:	Z2052	Type PU DAS
	Z2053	Type EUD

■ Installation Recommendation, (PU DAS)

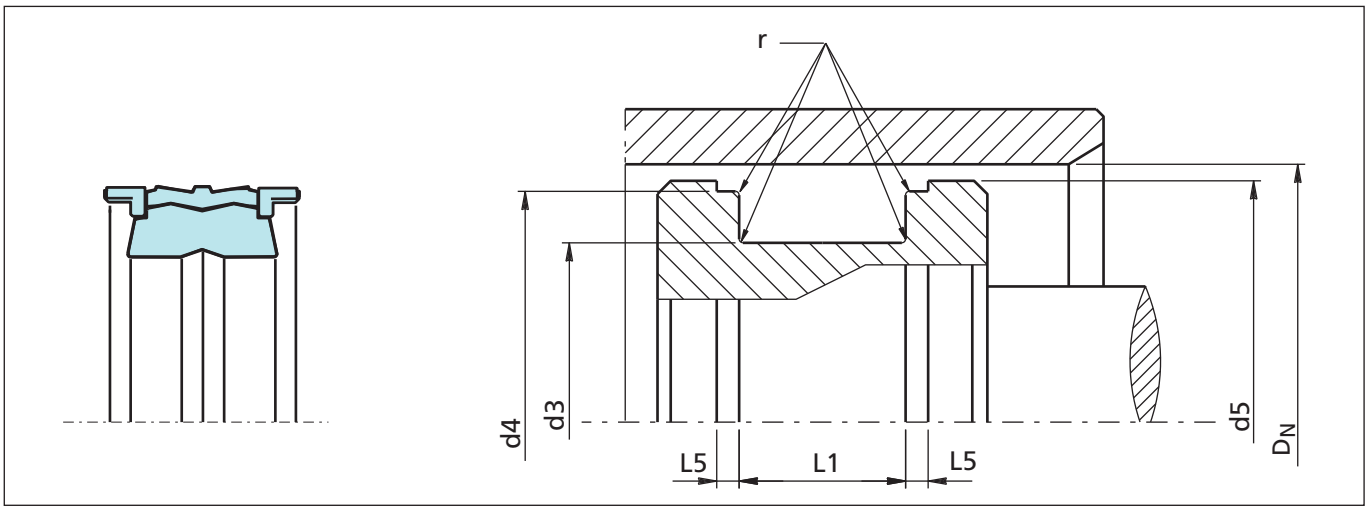

Figure 57 Installation drawing

Table LVI Installation dimensions / TSS Article No.

Bore Dia.	Groove Dimensions					Piston Dia.	TSS Article No.
D_N H9	d_3 h9	d_4 h9	L_1 +0.2	L_5 +0.1	r max	d_5 h11	
40.0	26.0	36.00	15.5	2.60	0.4	38.50	PCC000400-Z2052
45.0	31.0	41.00	15.5	2.60	0.4	44.00	PCC000450-Z2052
50.0	34.0	46.00	20.5	3.10	0.4	49.00	PCC000500-Z2052
55.0	39.0	51.00	20.5	3.10	0.4	54.00	PCC000550-Z2052
60.0	44.0	56.00	20.5	3.10	0.4	59.00	PCC000600-Z2052
63.0	47.0	59.00	20.5	3.10	0.4	62.00	PCC000630-Z2052
65.0	49.0	61.00	20.5	3.10	0.4	64.00	PCC000650-Z2052
70.0	54.0	66.00	20.5	3.10	0.4	69.00	PCC000700-Z2052
75.0	59.0	71.00	20.5	3.10	0.4	74.00	PCC000750-Z2052
80.0	62.0	76.00	22.5	3.60	0.4	79.00	PCC000800-Z2052
90.0	72.0	86.00	22.5	3.60	0.4	89.00	PCC000900-Z2052
100.0	82.0	96.00	22.5	3.60	0.4	99.00	PCC001000-Z2052
110.0	92.0	106.00	22.5	3.60	0.4	109.00	PCC001100-Z2052
125.0	103.0	121.00	26.5	5.10	0.8	124.00	PCC001250-Z2052
140.0	118.0	136.00	26.5	5.10	0.8	139.00	PCC001400-Z2052
150.0	128.0	146.00	26.5	5.10	0.8	149.00	PCC001500-Z2052
160.0	138.0	156.00	26.5	5.10	0.8	159.00	PCC001600-Z2052
165.0	143.0	161.00	26.5	5.10	0.8	164.00	PCC001650-Z2052
170.0	148.0	166.00	26.5	5.10	0.8	169.00	PCC001700-Z2052
180.0	158.0	176.00	26.5	5.10	0.8	179.00	PCC001800-Z2052
200.0	175.0	196.00	31.5	6.60	0.8	199.00	PCC002000-Z2052

Bore Dia.	Groove Dimensions					Piston Dia.	TSS Article No.
D_N H9	d_3 h9	d_4 h9	L_1 +0.2	L_5 +0.1	r max	d_5 h11	
250.0	220.0	242.90	35.4	6.35	0.8	248.00	PCC002500-Z2052
270.0	240.0	262.90	35.4	6.35	0.8	267.00	PCC002700-Z2052

■ Installation Recommendation, Type EUD

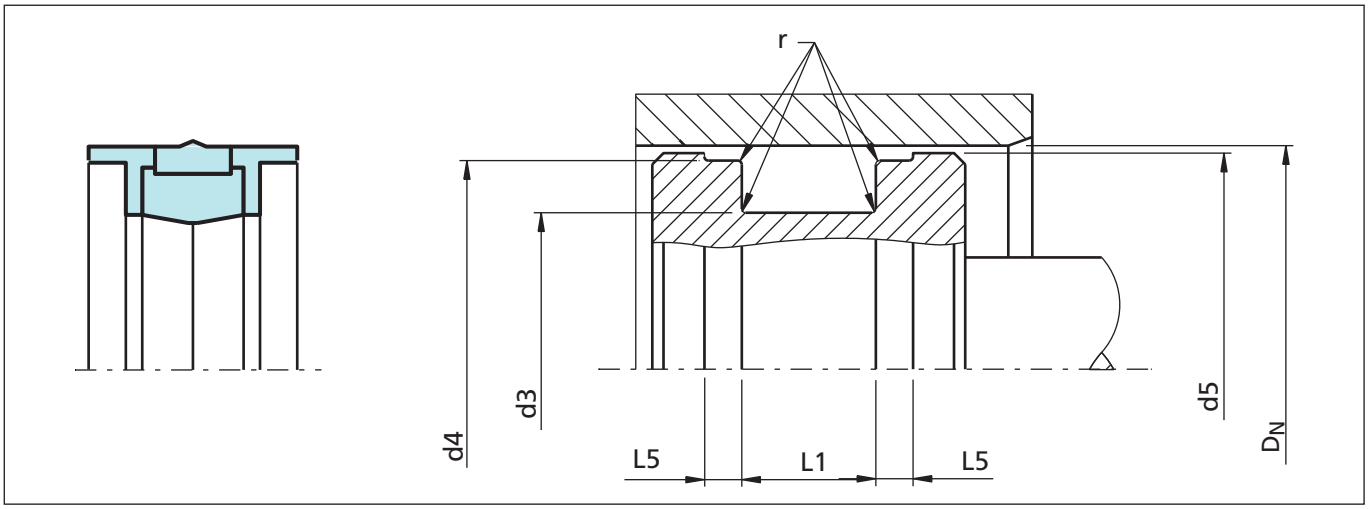

Figure 58 Installation drawing

Table LVII Installation dimensions / TSS Article No.

Bore Dia.	Groove Dimensions					Piston Dia.	TSS Article No.	Description
D_N H9	d_3 h9	d_4 h9	L_1 +0.2	L_5 +0.1	r max	d_5 h11		
40.0	32.0	36.0	10.0	4.2	0.2	39.40	PCG000400-Z2053	EUD4032/1-Z20
50.0	38.0	46.0	20.5	4.2	0.2	49.40	PCG000500-Z2053	EUD5038-Z20
50.0	40.0	46.0	12.5	4.2	0.2	49.40	PCG100500-Z2053	EUD5040/1-Z20
55.0	43.0	51.0	20.5	4.2	0.2	54.40	PCG000550-Z2053	EUD5543-Z20
60.0	48.0	56.0	20.5	4.2	0.2	59.40	PCG000600-Z2053	EUD6048-Z20
63.0	51.0	59.0	20.5	4.2	0.2	62.40	PCG000630-Z2053	EUD6351-Z20
65.0	53.0	61.0	20.5	4.2	0.2	64.40	PCG000650-Z2053	EUD6553-Z20
65.0	55.0	61.0	12.5	4.2	0.2	64.40	PCG100650-Z2053	EUD6555/1-Z20
70.0	58.0	66.0	20.5	4.2	0.2	69.40	PCG000700-Z2053	EUD7058-Z20
80.0	66.0	76.0	22.5	5.2	0.2	79.40	PCG000800-Z2053	EUD8066-Z20
85.0	71.0	81.0	22.5	5.2	0.2	84.40	PCG000850-Z2053	EUD8571-Z20
90.0	76.0	86.0	22.5	5.2	0.2	89.40	PCG000900-Z2053	EUD9076-Z20
100.0	86.0	96.0	22.5	5.2	0.2	99.40	PCG001000-Z2053	EUD10086-Z20
110.0	96.0	106.0	22.5	5.2	0.2	109.40	PCG001100-Z2053	EUD11096-Z20
120.0	106.0	116.0	22.5	5.2	0.2	119.40	PCG001200-Z2053	EUD120106-Z20
125.0	108.0	121.0	26.5	7.2	0.4	124.40	PCG001250-Z2053	EUD125108-Z20
140.0	123.0	136.0	26.5	7.2	0.4	139.40	PCG001400-Z2053	EUD140123-Z20
160.0	143.0	156.0	26.5	7.2	0.4	159.40	PCG001600-Z2053	EUD160143-Z20

Compact Seal
POLYPAC® - Duopac DPS/DPC

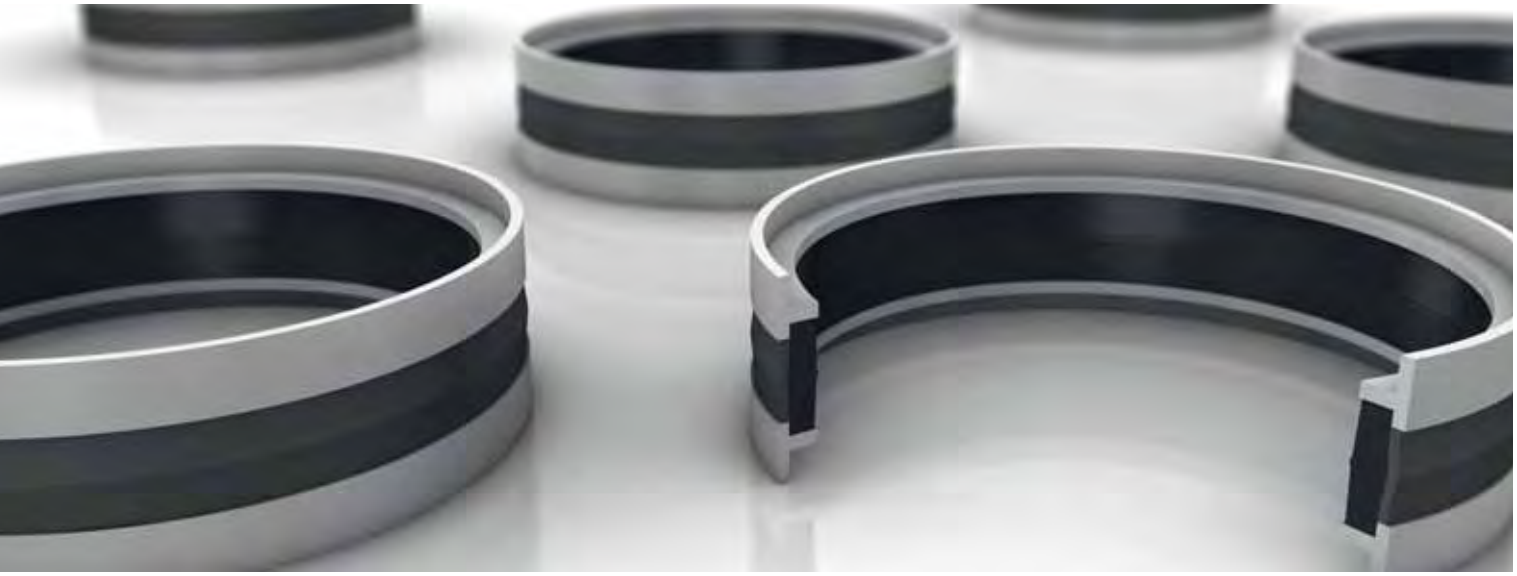

Double Acting

Combined Seal and
Guide Element

Material:
Rubber Fabric Reinforced NBR
and POM

■ DUOPAC rubber fabric reinforced compact seals Type DPS and DPC

Description

The compact seals DUOPAC DPS and DPC types are double acting piston seals with integrated guide rings. DUOPAC has been designed to optimize the advantages of the materials selection:

- Fabric reinforcement with high mechanical strength, optimum thermal stability and lubricating properties is incorporated in the sealing element all over the dynamic contact area. For the DUOPAC DPC the reinforcement is extended on both sides to improve the extrusion resistance
- Nitrile based elastomer with optimum elasticity and low compression set provides the initial radial pre-load
- Acetal resin with improved form stability gives the Guide/ backup rings high distortion and extrusion resistance

Type DPS

The DPS profile has been designed for its installation in closed grooves. The radial dimension of the profile has been reduced to the minimum to allow the necessary deformation during installation in closed grooves.

Consequently its use must be limited to pressures up to 35 MPa.

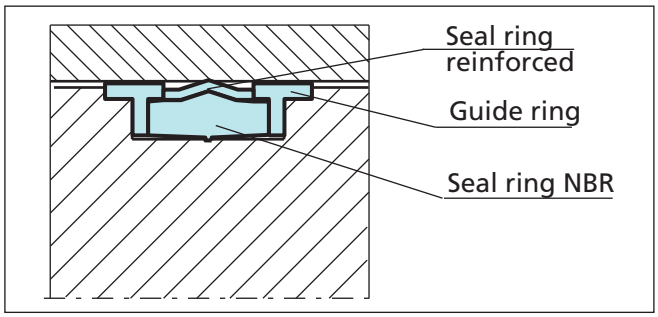

Figure 59 Compact Seal, Type DPS

Type DPC

The DPC profile is much more robust and can therefore be used for pressure level up to 70 MPa.

An open groove is necessary.

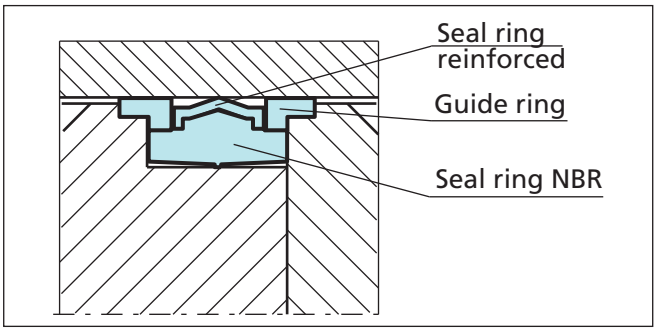

Figure 60 Compact Seal, Type DPC

Advantages

- DPS can be installed into closed grooves but its use must consequently be limited to medium duty applications
- DPC are usually installed in open grooves in Heavy Duty applications (pressure peak up to 80MPa)
- Improved abrasion resistance
- Excellent sealing effect in combination with good dynamic and static friction behavior

Application Examples

The Compact seals are the recommended Sealing element for double acting Pistons of hydraulic components in following applications:

- Mining cylinders
- Presses
- Steel mills equipment
- Water hydraulic cylinders

Technical Data

Operating conditions:

For an optimum performance of the DUOPAC, the recommended tolerances and surface finish must be applied.

Pressure:	Up to 35 MPa DPS type Up to 70 MPa DPC type
Speed:	Up to 0.5 m/s
Temperature:	-30 °C to +130 °C
Media:	Mineral oil based hydraulic fluids, water/oil and water/glycol emulsions.

Important Note:
The above data are maximum values and cannot be used at the same time. e.g. the maximum operating speed depends on material type, pressure, temperature and gap value.
Temperature range also dependent on medium.

Materials

- The compact seals DUOPAC are available in the following material composition:

Sealing element: Rubber fabric reinforced NBR

Guide/Back-up Rings:	POM
Material set-code:	N00OC

■ Installation Recommendation, Type DPS

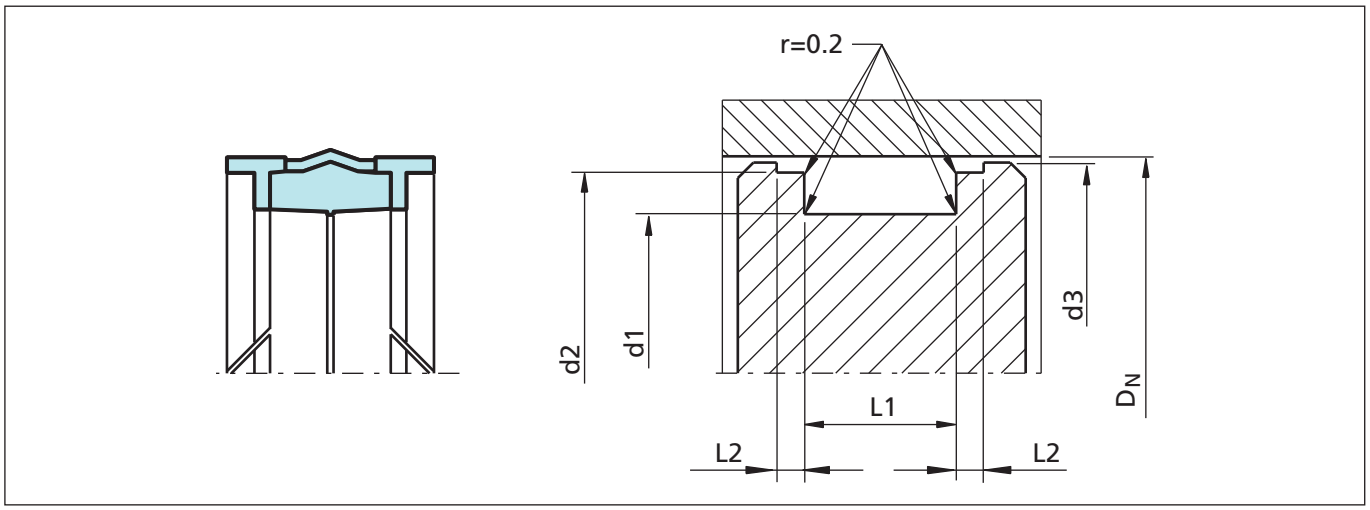

Figure 61 Installation drawing

Ordering Example

Compact Seal Type DPS

Bore diameter:	D_N = 80 mm
Groove diameter:	d1 = 66 mm
Groove width:	L1 = 22.5 mm
TSS Part No.:	PCE100800 (from Table LVIII)
Material set-code:	N00OC

TSS Article No. PCE1 0 0800 - N00OC

- TSS Series No.
- Type (Standard)
- Bore diameter x 10
- Quality Index (Standard)
- Material set-code

Polypac Ref. No.: DPS 8066

Table LVIII Installation dimensions / TSS Article No.

Bore Dia.	Groove Dimensions					TSS Article No.	Description
D_N H11	**d1** h9	**L1** +0.2	**L2** +0.1	**d2** h9	**d3** h11		
25.0	**17.0**	**10.0**	**4.0**	**22.0**	**24.0**	**PCE000250-N00OC**	**DPS 2517/1**
32.0	24.0	15.5	3.2	28.0	31.4	PCE000320-N00OC	DPS 3224
32.0	**24.0**	**10.0**	**4.0**	**29.0**	**31.0**	**PCE100320-N00OC**	**DPS 3224/1**
35.0	27.0	15.5	3.2	31.0	34.4	PCE000350-N00OC	DPS 3527
40.0	32.0	15.5	3.2	36.0	39.4	PCE000400-N00OC	DPS 4032
40.0	**32.0**	**10.0**	**4.0**	**37.0**	**39.0**	**PCE100400-N00OC**	**DPS 4032/1**
45.0	37.0	15.5	3.2	41.0	44.4	PCE000450-N00OC	DPS 4537
50.0	38.0	20.5	4.2	46.0	49.4	PCE000500-N00OC	DPS 5038
50.0	**40.0**	**12.5**	**4.0**	**47.0**	**49.0**	**PCE100500-N00OC**	**DPS 5040/1**
55.0	43.0	20.5	4.2	51.0	54.4	PCE000550-N00OC	DPS 5543
60.0	48.0	20.5	4.2	56.0	59.4	PCE000600-N00OC	DPS 6048
63.0	51.0	20.5	4.2	59.0	62.4	PCE000630-N00OC	DPS 6351
63.0	**53.0**	**12.5**	**4.0**	**60.0**	**62.0**	**PCE100630-N00OC**	**DPS 6353/1**
65.0	53.0	20.5	4.2	61.0	64.4	PCE000650-N00OC	DPS 6553
70.0	58.0	20.5	4.2	66.0	69.4	PCE000700-N00OC	DPS 7058
75.0	63.0	20.5	4.2	71.0	74.4	PCE000750-N00OC	DPS 7563
80.0	**65.0**	**20.0**	**5.0**	**76.0**	**78.5**	**PCE000800-N00OC**	**DPS 8065/1**
80.0	66.0	22.5	5.2	76.0	79.4	PCE100800-N00OC	DPS 8066
85.0	71.0	22.5	5.2	81.0	84.4	PCE000850-N00OC	DPS 8571
90.0	76.0	22.5	5.2	86.0	89.4	PCE000900-N00OC	DPS 9076
100.0	**85.0**	**20.0**	**5.0**	**96.0**	**98.5**	**PCE001000-N00OC**	**DPS 10085/1**
100.0	86.0	22.5	5.2	96.0	99.4	PCE101000-N00OC	DPS 10086
110.0	96.0	22.5	5.2	106.0	109.4	PCE001100-N00OC	DPS 11096
120.0	106.0	22.5	5.2	116.0	119.4	PCE001200-N00OC	DPS 120106
125.0	**105.0**	**25.0**	**6.3**	**120.0**	**123.0**	**PCE001250-N00OC**	**DPS 125105/1**
125.0	108.0	26.5	7.2	121.0	124.4	PCE101250-N00OC	DPS 125108
140.0	120.0	25.0	6.3	135.0	138.0	PCE001400-N00OC	DPS 140120/1
140.0	123.0	26.5	7.2	136.0	139.4	PCE101400-N00OC	DPS 140123
150.0	133.0	26.5	7.2	146.0	149.4	PCE001500-N00OC	DPS 150133
160.0	**140.0**	**25.0**	**6.3**	**155.0**	**158.0**	**PCE001600-N00OC**	**DPS 160140/1**
160.0	143.0	26.5	7.2	156.0	159.4	PCE101600-N00OC	DPS 160143
180.0	163.0	26.5	7.2	176.0	179.4	PCE001800-N00OC	DPS 180163
200.0	**170.0**	**36.0**	**12.5**	**192.0**	**197.0**	**PCE002000-N00OC**	**DPS 200170/1**
200.0	180.0	31.5	9.2	196.0	199.4	PCE102000-N00OC	DPS 200180
220.0	200.0	31.5	9.2	216.0	219.4	PCE002200-N00OC	DPS 220200
250.0	230.0	31.5	9.2	246.0	249.4	PCE002500-N00OC	DPS 250230

The bore diameters in **bold** type comply with the recommendations of ISO 6547.

■ Installation Recommendation, Type DPC

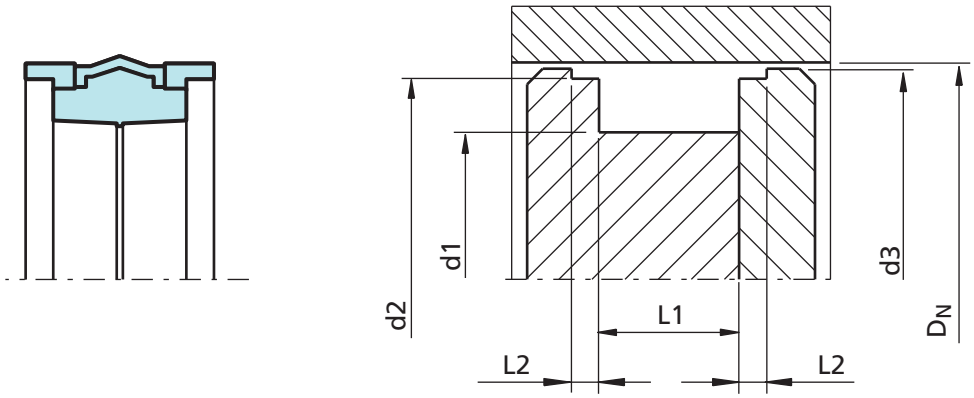

Figure 62 Installation drawing

Ordering Example

Compact Seal Type DPC

Bore diameter:	D_N = 80 mm
Groove diameter:	d1 = 60 mm
Groove width:	L1 = 22.4 mm
TSS Part No.:	PCF000800 (from Table LIX)
Material set-code:	N00OC

TSS Article No. PCF0 0 0800 - N00OC

- TSS Series No.
- Type (Standard)
- Bore diameter x 10
- Quality Index (Standard)
- Material set-code

Polypac Ref. No.: DPC 8060

Table LIX Installation dimensions / TSS Article No.

Bore Dia.	Groove Dimensions					TSS Article No.	Description
D_N H11	**d1** h9	**L1** +0.2	**L2** +0.1	**d2** h11	**d3** h11		
30.0	17.0	15.4	6.35	26.50	29.00	PCF000300-N00OC	DPC 3017
35.0	22.0	15.4	6.35	31.40	33.70	PCF000350-N00OC	DPC 3522
40.0	24.0	18.4	6.35	35.40	38.70	PCF000400-N00OC	DPC 4024
45.0	29.0	18.4	6.35	40.40	43.70	PCF000450-N00OC	DPC 4529
50.0	34.0	18.4	6.35	45.40	48.70	PCF000500-N00OC	DPC 5034
55.0	39.0	18.4	6.35	50.40	53.70	PCF000550-N00OC	DPC 5539
60.0	44.0	18.4	6.35	55.40	58.70	PCF000600-N00OC	DPC 6044
65.0	50.0	18.4	6.35	60.40	63.70	PCF000650-N00OC	DPC 6550
70.0	50.0	22.4	6.35	64.20	68.30	PCF000700-N00OC	DPC 7050
75.0	55.0	22.4	6.35	69.20	73.30	PCF000750-N00OC	DPC 7555
80.0	60.0	22.4	6.35	74.20	78.30	PCF000800-N00OC	DPC 8060
85.0	65.0	22.4	6.35	79.20	83.30	PCF000850-N00OC	DPC 8565

Bore Dia.	Groove Dimensions					TSS Article No.	Description
D_N H11	**d1** h9	**L1** +0.2	**L2** +0.1	**d2** h11	**d3** h11		
90.0	70.0	22.4	6.35	84.15	88.30	PCF000900-N00OC	DPC 9070
95.0	75.0	22.4	6.35	89.15	93.30	PCF000950-N00OC	DPC 9575
100.0	75.0	22.4	6.35	93.15	98.05	PCF001000-N00OC	DPC 10075
100.0	80.0	25.4	6.35	94.15	98.30	PCF101000-N00OC	DPC 10080
105.0	85.0	22.4	6.35	98.10	103.00	PCF001050-N00OC	DPC 10585
110.0	85.0	22.4	6.35	103.10	108.00	PCF001100-N00OC	DPC 11085
120.0	100.0	25.4	6.35	114.10	118.00	PCF001200-N00OC	DPC 120100
130.0	105.0	25.4	6.35	123.10	128.00	PCF001300-N00OC	DPC 130105
140.0	115.0	25.4	6.35	133.00	138.00	PCF001400-N00OC	DPC 140115
150.0	125.0	25.4	6.35	143.00	148.00	PCF001500-N00OC	DPC 150125
160.0	135.0	33.0	6.35	153.00	158.00	PCF001600-N00OC	DPC 160135

POLYPAC® - Veepac CH

Single Acting

Set of Chevron Ring

With Support and Pressure Energizing Ring

Without and with Anti-extrusion Ring

Material:
Farbric Reinforced Rubber - POM or PTFE

■ Veepac CH

Description

Veepac seals are sets of fabric reinforced chevron rings. They are composed by a support ring, "V" shaped sealing rings and a pressure energizing ring.

The support ring or base ring guides and sustains the other "V" shaped rings for best performance. Special versions provide incorporated anti-extrusion rings, either on the inner or outer side, for rod or piston applications (see type CH/NEI or CH/NEO). In standard version the support ring is manufactured in cotton fabric reinforced rubber, for a good anti-extrusion resistance.

The intermediate "V" shaped rings (vee-rings) are the real sealing elements of Veepac seals. Their particular shape confirs the capacity of increasing sealing effectiveness under high pressure. In standard version they are made in cotton fabric reinforced NBR and pure NBR.

The energizer ring ensures uniform loading of pressure on the other rings. This element is manufactured in acetal resin, or cotton fabric reinforced nitrile for diameters over 300 mm (standard material).

Design

The veepac seals are available in different compositions. The standard version consists in a support ring, two fabric reinforced vee-rings, one rubber vee-ring and the energizing ring.

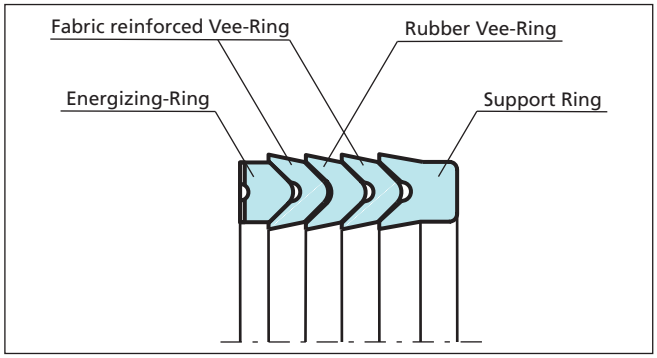

Figure 63 Veepac standard design

When the rubber vee-ring isn't available (indicated in the Table LXI with the symbol ^) the veepac are assembled with three fabric reinforced vee-ring as shown in figure below.

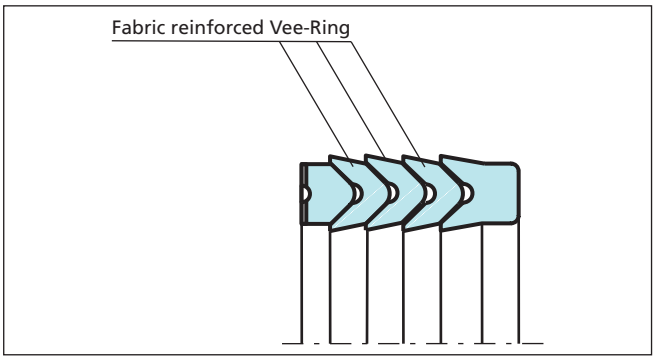

Figure 64 Veepac design with 3 fabric reinforced vee-ring

Where extrusion gaps are greater than those specified or for higher pressure conditions, special designs incorporating anti-extrusion rings can be made, to suit piston (suffix NEO) at the Polypac ref.

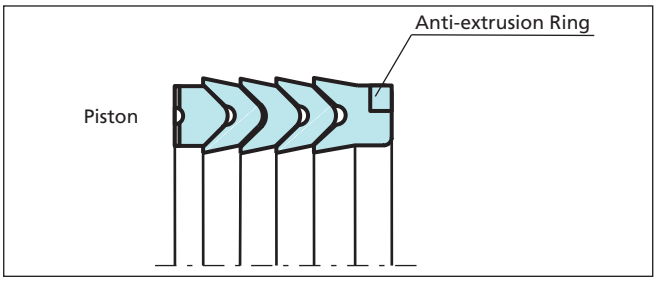

Figure 65 Veepac design with anti-extrusion ring

Advantages

- Exceptional wear resistance
- Pre-load adjustment capability
- Excellent behaviour in harsh conditions
- Rod-seal replacement without complete cylinder dismantling possible
- Long service life

Application Examples

VEEPAC seals are recommended for single acting or double acting (back to back installation) hydraulic cylinders in the following applications:

- Ship hydraulics
- Excavators
- Steel mills
- Presses

Technical Data

Pressure:	Up to 40 MPa
Velocity:	Up to 0.5 m/s
Temperature:	-30 °C to +200 °C
Media:	Hydraulic fluids Mineral Oil based hydraulic fluids, Water/oil and Water/ Glycol emulsions.
Groove type:	Open

Important Note:
The above data are maximum values and cannot be used at the same time. e.g. the maximum operating speed depends on material type, pressure, temperature and gap value.
Temperature range also dependent on medium.

Gap Dimensions

To prevent extrusion the diameter not facing the pressure must be max. 0.3 mm smaller (than the piston seal) and 0.3 mm larger (than the rod seal). Using Veepac with Back-up Ring enables double values.

Materials

Components of the VEEPAC seals are made in different combinations of materials, according to the specific application (see table below).

Table LX Material Selection

Material Set Code	Temperature	Sealing Ring Material	Energizer Ring Material	
N0O0C	-30 to +130 °C	Cotton reinforced NBR	POM-GL-BK	up to 300 mm I.D.
			Cotton reinforced NBR	over 300 mm I.D.
V0O0A	-20 to +150 °C	Aramidic Fibre reinforced FKM	POM-GL-BK	up to 300 mm I.D.
			Aramidic Fibre reinforced FKM	over 300 mm I.D.
V0P0A	-20 to +200 °C	Aramidic Fibre reinforced FKM	Filled PTFE	up to 300 mm I.D.
			Aramidic Fibre reinforced FKM	over 300 mm I.D.

Highlighted material is standard.

■ Installation Recommendation, Type POLYPAC® CH/NEO (with Back-up Ring)

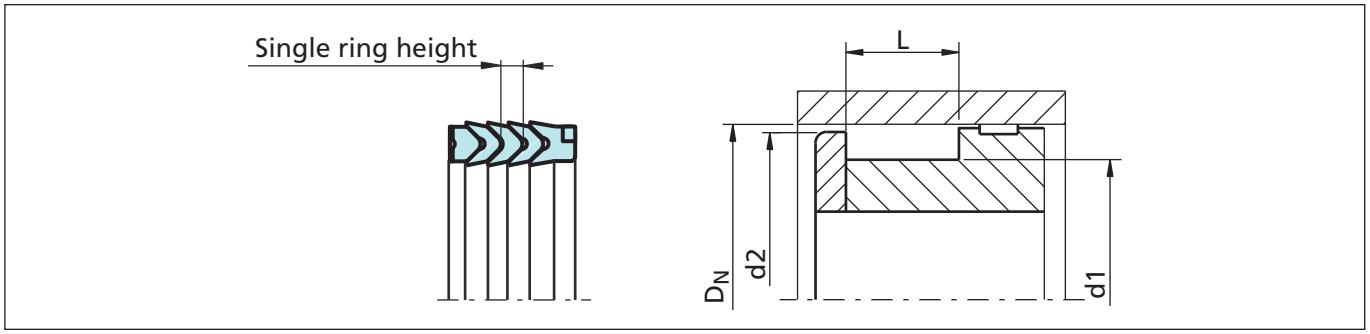

Figure 66 Installation drawing

Ordering Example

For a **piston** application of standard Veepac sealing element composed by: Support ring **with anti-extrusion ring,** 3 elements vee-rings and Energizer ring:

Bore diameter:	D_N = 150.0 mm
Groove diameter:	d1 = 120.0 mm
TSS Part No.:	PCH0 E 1500
Material Set-Code:	N0O0C
Polypac Part. No.:	CH 590472/NEO

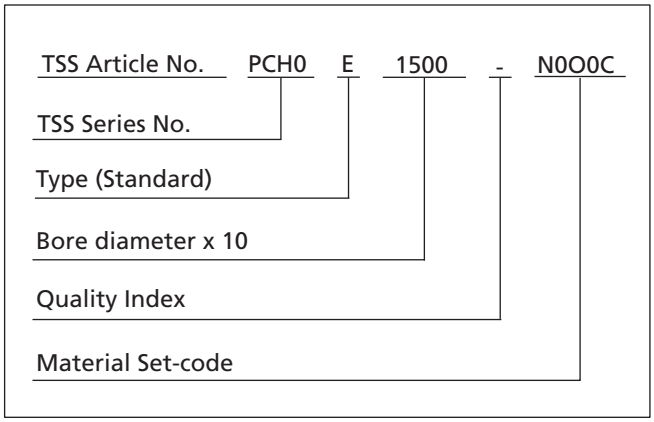

Table LXI Installation dimensions / TSS Part No.

Bore Diameter	Groove Diameter	Groove Width	Diameter	Single Ring Height	Special Version		TSS Part No.	Polypac Ref. No.*
D_N H9/f8	**d1** h11	**L** -0.25	**d2** +/-0.1					
80.00	60.00	32.15	79.00	5.66			PCH1E0800	CH 314236/NEO
88.90	69.85	35.50	87.90	4.83			PCH0E0889	CH 350275/1/NEO
90.00	70.00	30.00	89.00	5.08			PCH0E0900	CH 354275/NEO
95.25	76.20	28.97	94.20	5.16			PCH0E0952	CH 375300/NEO
95.25	82.55	21.72	94.20	3.71	#	^	PCH1E0952	CH 375325/NEO
101.60	85.72	26.75	100.60	4.14		^	PCH0E1016	CH 400337/NEO
107.95	88.90	31.00	106.90	4.90		^	PCH0E1079	CH 425350/NEO
114.30	88.90	35.32	113.30	6.55		^	PCH0E1143	CH 450350/NEO
114.30	95.25	25.40	113.30	5.00		^	PCH1E1143	CH 450375/NEO
114.30	98.42	26.59	113.30	4.34		^	PCH2E1143	CH 450387/NEO
125.00	100.00	36.90	124.00	6.60	#	^	PCH1E1250	CH 492393/NEO
125.00	105.00	27.00	124.00	5.00		^	PCH2E1250	CH 492413/1/NEO

* As the Polypac Ref. No. does not refer to the material, please always state the full number if available for identification.
"#" and "^" see Table LXII.

Bore Diameter	Groove Diameter	Groove Width	Diameter	Single Ring Height	Special Version		TSS Part No.	Polypac Ref. No.*
D_N H9/f8	**d1** h11	**L** -0.25	**d2** +/-0.1					
127.00	101.60	32.15	126.00	5.82	#		PCH0E1270	CH 500400/NEO
127.00	107.95	30.00	126.00	4.52		^	PCH1E1270	CH 500425/NEO
139.70	114.30	33.50	138.70	5.56		^	PCH0E1397	CH 550450/1/NEO
140.00	115.00	37.12	139.00	6.00		^	PCH0E1400	CH 551452/NEO
140.00	120.00	30.00	139.00	5.36			PCH1E1400	CH 551472/NEO
150.00	120.00	44.00	149.00	7.50			PCH0E1500	CH 590472/NEO
152.40	127.00	38.63	151.40	6.48			PCH0E1524	CH 600500/NEO
160.00	130.00	41.50	159.00	5.50	#		PCH1E1600	CH 629511/NEO
160.00	130.00	43.50	159.00	5.50	#		PCH2E1600	CH 629511/1/NEO
187.32	171.45	24.20	186.30	4.09	#	^	PCH0E1873	CH 737675/NEO
210.00	180.00	32.97	209.00	5.99			PCH0E2100	CH 826708/B/NEO
222.25	190.50	50.00	221.20	7.57		^	PCH0E2222	CH 875750/NEO
280.00	250.00	32.97	279.00	5.99		^	PCH0E2800	CH 1102984/B/NEO

* As the Polypac Ref. No. does not refer to the material, please always state the full number if available for identification.
"#" and "^" see Table LXII.

Table LXII Explanation to "Special Version"

Not available with rubber V-ring		^		
Available upon request	#			

POLYPAC® - Veepac CH/G1

Single Acting

Chevron Ring

With Support and Pressure Energizing Ring

Material:
POM, PTFE, Farbric Reinforced Rubber

■ Veepac CH/G1

Description

Veepac G1 is a set of fabric reinforced rings comprising one support ring, one sealing ring and a pressure energizing ring. It is a single acting piston seal.

The support ring or base ring is manufactured out of nitrile elastomer with high Shore A hardness and reinforced with impregnated cotton fabric layers for an optimal extrusion resistance.

The intermediate ring - the sealing ring - is a fabric reinforced nitrile elastomer with good resilience characteristics enabling the radial deflection under pressure load. Consequently the optimum sealing force is applied to the bore to be sealed.

The energiser or spreader ring is made of POM or PTFE. Its function is to ensure a uniform pre-load of the seal.

In some specific applications the energiser ring is made out of Acetal resin or Phenolic resin. Please contact our local TSS company for further details.

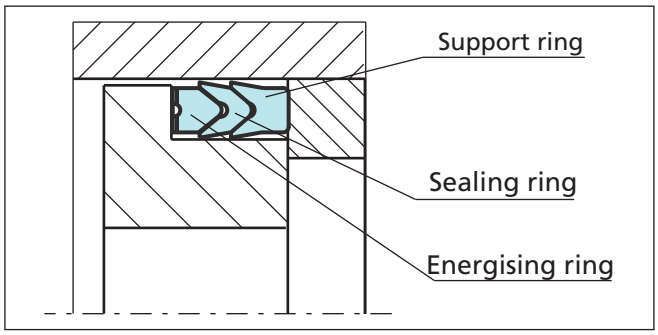

Figure 67 Veepac CH/G1

Advantages

- Exceptional wear resistance
- Pre-load adjustment capability
- Excellent behavior in harsh conditions

Application Examples

The Veepac seal is recommended for single acting or double acting (back to back installation) pistons in following applications:

- Mining equipment
- Excavator cylinders
- Steel mill cylinders
- Presses

Technical Data

Operating conditions:

Pressure:	Up to 40 MPa
Velocity:	Up to 0.5 m/s
Temperature:	-30 °C to +200 °C, depending on material
Media:	Mineral oil, water glycol, water emulsions

Important Note:
The above data are maximum values and cannot be used at the same time. e.g. the maximum operating speed depends on material type, pressure, temperature and gap value.
Temperature range also dependent on medium.

Materials

The following material can be delivered:

Material Set Code	Temperature	Sealing Ring Material	Energiser/ Spreader Ring Material
N0O0C	-30 to +130 °C	Cotton reinforced NBR	POM
V0O0A	-20 to +150 °C	Aramidic fiber reinforced FKM	POM
V0P0A	-20 to +200 °C	Aramidic fiber reinforced FKM	PTFE

Highlighted material is standard.

■ Installation Recommendation, Type CH/G1

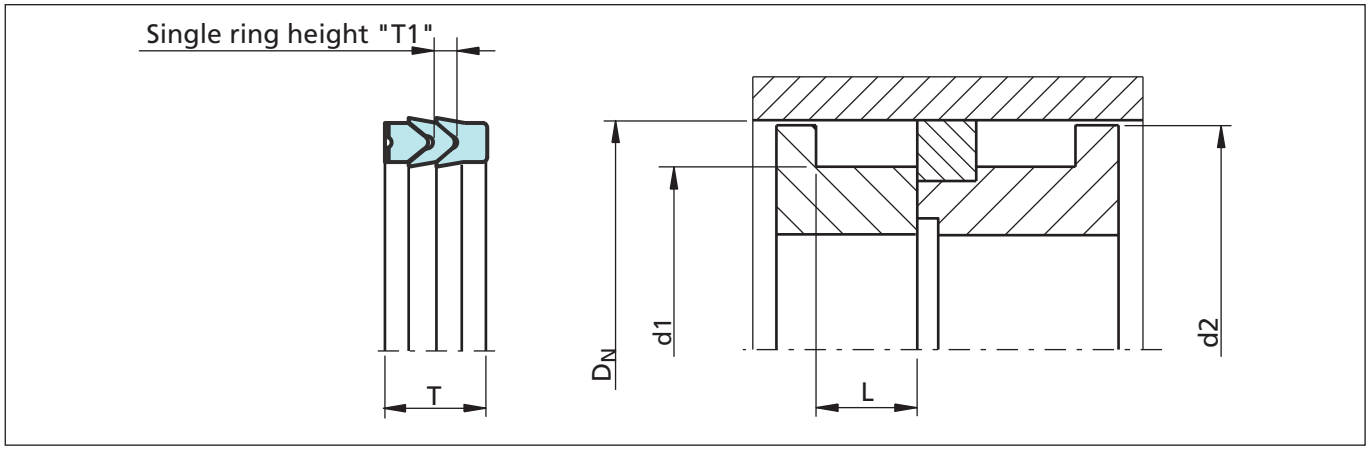

Figure 68 Installation drawing

Ordering Example

For sealing element Veepac CH/G1 comprising 1 base ring and 1 Chevron element in cotton fabric reinforced NBR and the Spreader ring in POM.

Bore diameter: D_N = 80.0 mm
TSS Part No. from Table LXIII: PCH0G0800
Material set-code
from material table above: N0O0C

TSS Article No. PC H0 G 0800 - N0O0C

- Article sub group
- TSS Series No.
- Execution Mark
- Bore diameter x 10
- Quality Index (Standard)
- Material code

Poypac Ref. No.: CH 314236/G1

Table LXIII Installation dimensions / TSS Part No.

Bore Dia.		Groove Dia.	Groove Width	Piston Dia.	Seal Width	Single Ring Height	TSS Part No.	Description
D_N	Tol.	**d1** h11	**L** +0.3	**d2** -0.3	**T**	**T1**		
40.0	H9/f8	25.0	11.5	39.0	11.0	3.2	PCH0G0400	CH 157098/G1
50.0	H9/f8	35.0	11.5	49.0	11.0	3.5	PCH0G0500	CH 196137/G1
55.0	H9/f8	40.0	11.5	54.0	11.0	2.9	PCH0G0550	CH 216157/G1
63.0	H9/f8	48.0	13.0	62.0	12.5	3.7	PCH0G0630	CH 248188/G1
65.0	H9/f8	50.0	11.5	64.0	11.0	3.9	PCH0G0650	CH 255196/G1
80.0	H9/f8	60.0	15.2	79.0	14.6	5.1	PCH0G0800	CH 314236/G1
100.0	H8/f8	80.0	21.2	99.0	20.6	5.0	PCH0G1000	CH 393314/G1
125.0	H8/f7	100.0	25.8	124.0	25.0	6.1	PCH0G1250	CH 492393/G1
140.0	H8/f7	115.0	25.8	139.0	25.0	8.0	PCH0G1400	CH 551452/G1

Further size on Symmetric seal chapter.

Bore Dia.		Groove Dia.	Groove Width	Piston Dia.	Seal Width	Single Ring Height	TSS Part No.	Description
D_N	**Tol.**	**d1** h11	**L** +0.3	**d2** -0.3	**T**	**T1**		
160.0	H8/f7	130.0	29.0	158.5	28.0	6.0	PCH0G1600	CH 629511/G1
180.0	H8/f7	150.0	31.5	178.5	30.5	9.9	PCH0G1800	CH 708590/G1
200.0	H8/f7	170.0	33.5	198.5	32.5	7.4	PCH0G2000	CH 787669/G1
240.0	H8/f7	210.0	33.5	238.5	32.5	10.2	PCH0G2400	CH 944826/G1
250.0	H8/f7	220.0	33.5	248.5	32.5	10.2	PCH0G2500	CH 984866/G1

Further size on Symmetric seal chapter.

POLYPAC® - Selemaster DSM

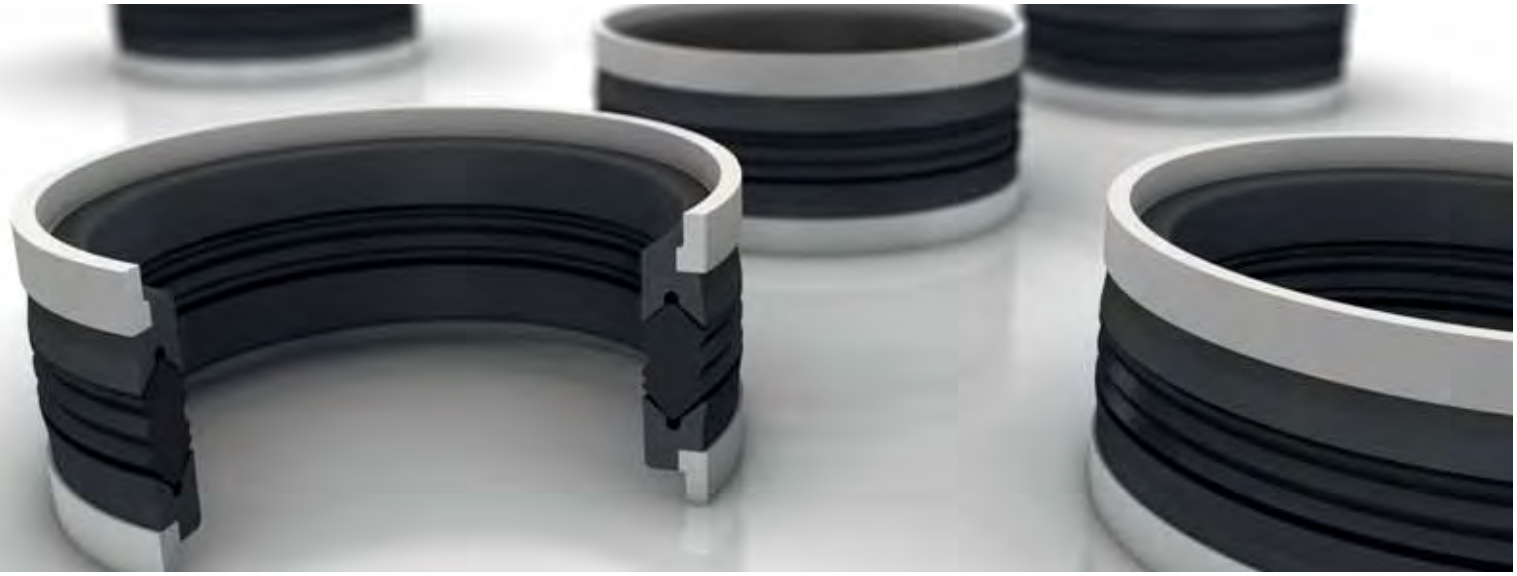

Double Acting

Compact Piston Seal

Material:
NBR + Fibre Reinforced NBR + POM

■ Selemaster DSM

Description

The piston seal DSM range has been designed to meet the needs of hydraulic equipments operating at high pressures and subjected to severe loading and vibration conditions.

The main sealing element is manufactured in a highly compression set resistant nitrile. The most important quality of this element is the design of the multiple sealing lips for maximum sealing efficiency and end face configuration, which ensures that the selemaster can tolerate vibrations and severe misalignment.

The two support rings are made in cotton fabric reinforced nitrile elastomer; the "U" shape is energised when pressure is applied.

The last elements are the two guide rings manufactured in acetal resin which have also the function of anti-extrusion rings.

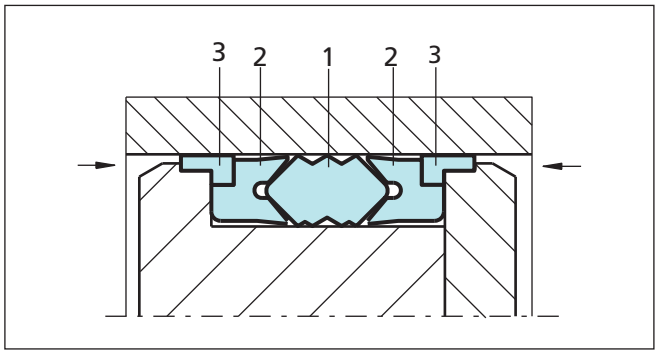

Figure 69 Selemaster design
1) Sealing element
2) Support ring
3) Guide ring

Advantages

- Effective sealing during vibration and shock loading
- High sealing efficiency
- Extrusion resistance at high pressure

Application Examples

- Earth-moving machines
- Excavators
- Lift platforms

Technical Data

Operating conditions

Pressure:	Up to 70 MPa
Velocity:	Up to 0.5 m/s
Temperature:	-40 °C to +130 °C
Media:	Hydraulic fluids Mineral oil-based hydraulic fluids, water and water/glycol emulsions
Groove type:	Open

Important Note:
The above data are maximum values and cannot be used at the same time. e.g. the maximum operating speed depends on material type, pressure, temperature and gap value.
Temperature range also dependent on medium.

Standard Material

1) Sealing element	NBR 80
2) Support ring	Cotton reinforced NBR
3) Guide ring	POM

■ Installation Recommendation

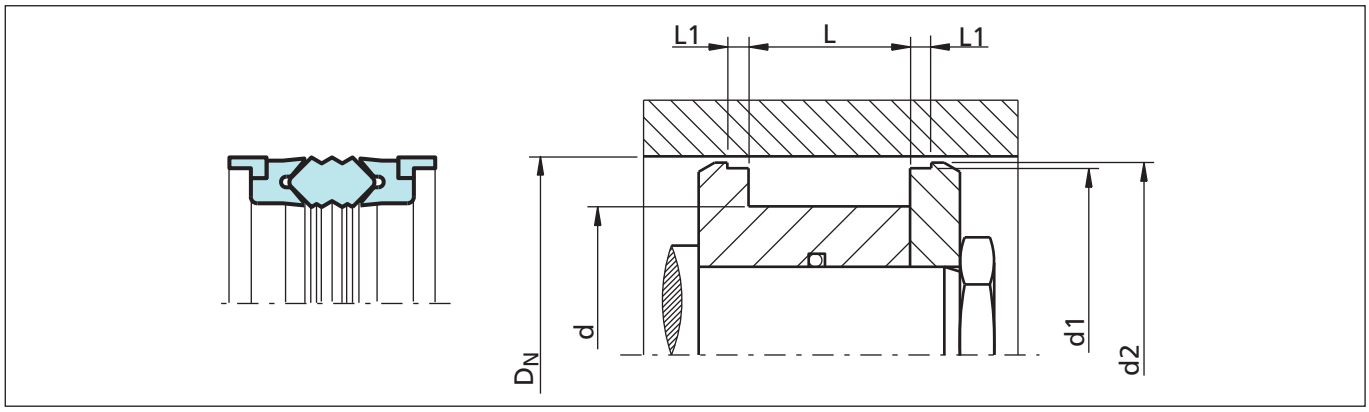

Figure 70 Installation drawing

Ordering Example

Selemaster DSM

Bore diameter:	D_N = 70.0 mm
Groove diameter:	d = 50.0 mm
Groove width	E = 35.0 mm
TSS Part No. (from Table LXIV):	PCK000700
Material code:	N8CO
Polypac Ref.:	DSM 275196/1A

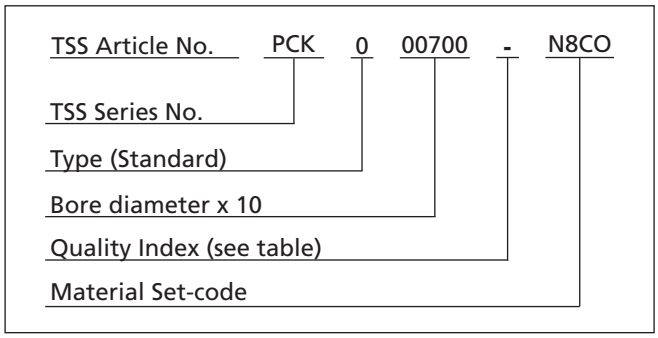

Table LXIV Installation dimensions / TSS Part No.

Bore Dia.	Groove Dia.	Groove Width	Groove Width	Diameter	Diameter		TSS Part No.	Description
D_N H11	**d** h11	**L** +0.2	**L1** +0.1	**d1** +/-0.05	**d2** +/-0.07			
45.00	29.00	32.00	6.35	38.80	42.80	^	PCK000450	DSM 177114/1A
50.00	34.00	32.00	6.35	43.77	47.80		PCK000500	DSM 196133/1A
55.00	40.00	32.00	6.35	48.77	52.80		PCK000550	DSM 216157/1A
60.00	44.00	32.00	6.35	53.80	57.80		PCK000600	DSM 236173/1A
63.00	47.00	32.00	6.35	56.74	60.80		PCK000630	DSM 248185/1A
63.50	47.62	31.75	6.35	57.25	61.30	^	PCK000635	DSM 250187/1A
65.00	49.00	32.00	6.35	58.70	62.80		PCK000650	DSM 255192/1A
70.00	50.00	35.00	9.52	62.62	67.50		PCK000700	DSM 275196/1A
75.00	55.00	35.00	9.52	67.70	72.50		PCK000750	DSM 295216/1A
80.00	60.00	35.00	9.52	72.62	77.50		PCK000800	DSM 314236/1A
80.00	64.00	32.00	9.52	72.62	77.50		PCK100800	DSM 314251/1A
85.00	65.00	35.00	9.52	77.62	82.50		PCK000850	DSM 334255/1A

^ Available upon request

Bore Dia.	Groove Dia.	Groove Width	Groove Width	Diameter	Diameter		TSS Part No.	Description
D_N H11	**d** h11	**L** +0.2	**L1** +0.1	**d1** +/-0.05	**d2** +/-0.07			
90.00	70.00	35.00	9.52	82.58	87.80		PCK000900	DSM 354275/1A
90.00	74.00	32.00	9.52	82.87	87.80		PCK100900	DSM 354291/1A
92.07	73.02	34.92	9.52	84.66	89.60	^	PCK000921	DSM 362287/1A
95.00	75.00	35.00	9.52	87.60	92.50		PCK000950	DSM 374295/1A
95.25	76.20	34.92	9.52	87.86	92.80	^	PCK000953	DSM 375300/1A
100.00	80.00	35.00	9.52	92.60	97.50		PCK001000	DSM 393314/1A
101.60	82.55	34.92	9.52	94.20	99.10		PCK001016	DSM 400325/1A
105.00	85.00	35.00	9.52	97.60	102.50	^	PCK001050	DSM 413334/1A
110.00	85.00	45.00	12.70	101.82	107.30		PCK001100	DSM 433334/1A
110.00	90.00	35.00	9.52	102.70	107.50		PCK101100	DSM 433354/1A
114.30	88.90	44.45	12.70	106.12	111.60		PCK001143	DSM 450350/1A
115.00	90.00	45.00	12.70	106.82	112.30		PCK001150	DSM 452354/1A
120.00	95.00	45.00	12.70	111.82	117.30		PCK001200	DSM 472374/1A
120.00	100.00	35.00	9.52	112.80	117.50		PCK101200	DSM 472393/1A
125.00	100.00	45.00	12.70	116.82	122.30		PCK001250	DSM 492393/1A
127.00	101.60	44.45	12.70	118.80	124.30		PCK001270	DSM 500400/1A
130.00	105.00	45.00	12.70	121.82	127.30		PCK001300	DSM 511413/1A
130.00	110.00	35.00	9.52	122.70	127.30		PCK101300	DSM 511433/1A
135.00	110.00	45.00	12.70	126.82	132.30		PCK001350	DSM 531433/1A
139.70	114.30	44.45	12.70	131.47	137.00	^	PCK001397	DSM 550450/1A
140.00	115.00	45.00	12.70	131.72	137.30		PCK001400	DSM 551452/1A
140.00	120.00	35.00	9.52	132.70	137.30		PCK101400	DSM 551472/1A
145.00	120.00	45.00	12.70	136.72	142.30		PCK001450	DSM 570472/1A
150.00	125.00	45.00	12.70	141.72	147.30		PCK001500	DSM 590492/1A
152.40	127.00	44.45	12.70	144.15	149.70	^	PCK001524	DSM 600500/1A
160.00	135.00	45.00	12.70	151.72	157.10		PCK001600	DSM 629531/1A
165.00	135.00	45.00	12.70	158.00	162.10		PCK001650	DSM 649531/1A
170.00	140.00	45.00	12.70	163.00	167.90		PCK001700	DSM 669551/1A
177.80	152.40	44.45	12.70	169.55	175.10		PCK001778	DSM 700600/1A
180.00	155.00	45.00	12.70	171.60	177.10		PCK001800	DSM 708610/1A
185.00	160.00	45.00	12.70	176.72	182.10		PCK001850	DSM 728629/1A
190.00	165.00	45.00	12.70	181.72	187.10		PCK001900	DSM 748649/1A
200.00	175.00	45.00	12.70	191.72	197.10		PCK002000	DSM 787688/1A
210.00	185.00	45.00	12.70	201.60	207.10		PCK002100	DSM 826728/1A
220.00	195.00	45.00	12.70	211.60	217.10		PCK002200	DSM 866767/1A
230.00	205.00	45.00	12.70	221.72	227.10		PCK002300	DSM 905807/1A

^ Available upon request

Bore Dia.	Groove Dia.	Groove Width	Groove Width	Diameter	Diameter		TSS Part No.	Description
D_N H11	**d** h11	**L** +0.2	**L1** +0.1	**d1** +/-0.05	**d2** +/-0.07			
240.00	215.00	45.00	12.70	231.72	237.10		PCK002400	DSM 944846/1A
250.00	225.00	45.00	12.70	241.72	247.10		PCK002500	DSM 984886/1A
260.00	235.00	45.00	12.70	251.72	257.10		PCK002600	DSM 1024925/1A
270.00	245.00	45.00	12.70	261.72	267.10		PCK002700	DSM 1062965/1A
280.00	255.00	45.00	12.70	271.72	277.10		PCK002800	DSM 11021004/1A
290.00	265.00	45.00	12.70	281.72	287.10		PCK002900	DSM 11411043/1A
300.00	275.00	45.00	12.70	291.72	297.10		PCK003000	DSM 11811082/1A
360.00	335.00	44.50	12.70	351.76	357.30		PCK003600	DSM 14171318/1A

^ Available upon request

Non Standard Seals

Available upon Request

Old Series

Special Series

Sealing Parts RSE/W

Single acting piston seal for dynamic applications. Installed in similar groove as B/NWO. The sealing element consist in a polyurethane U Cup and an L-shaped Back-up/guide ring.

Diameter Range mm	Pressure Range MPa	Temperature Range °C	Velocity m/s
32 - 120	Up to 25	-30 to +80	Up to 0.5

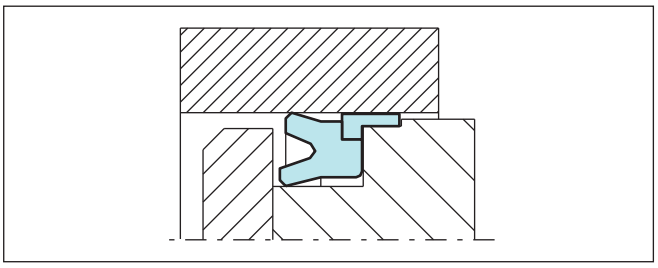

Sealing Parts RSE/W/AR

Sealing element identical to RSE/W with an additional retaining ring in front to allow easier installation.

Diameter Range mm	Pressure Range MPa	Temperature Range °C	Velocity m/s
32 - 120	Up to 25	-30 to +80	Up to 0.5

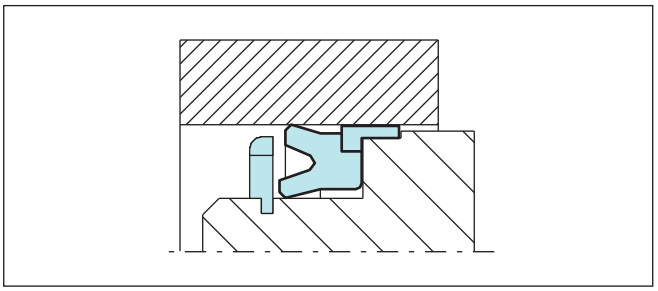

Polypac® D11W

Double acting piston seal for dynamic applications. Installed in open grooves. The NBR sealing element is supported at both sides by vulcanised cotton fabric reinforced rings with additional guide rings High sealing efficiency and high wear resistance.

Diameter Range mm	Pressure Range MPa	Temperature Range °C	Velocity m/s
25 - 300	Up to 50	-30 to +200	Up to 0.5

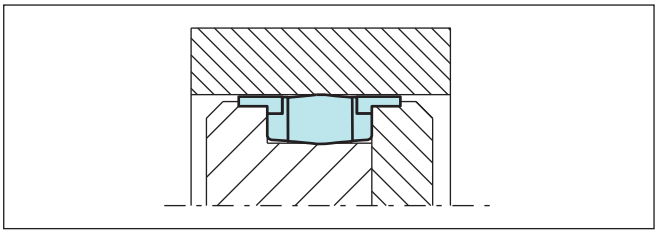

Polypac® DS - DS/NEO

Single acting piston U Ring for dynamic applications. Installed in open grooves. The U shaped sealing element is made out of cotton fabric reinforced NBR and provide with a NBR energiser ring and an additional POM back up ring can be integrated DS/NEO. High sealing efficiency and high wear resistance.

Diameter Range mm	Pressure Range MPa	Temperature Range °C	Velocity m/s
25 - 300	Up to 70 (DS/NEO)	-30 to +130	Up to 0.5

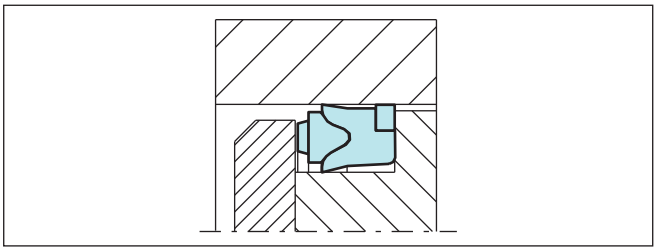

Polypac® B/NWO

Single acting piston seal for dynamic applications. Installed in open grooves. The nitrile sealing element is supported by a vulcanised cotton fabric reinforced ring with additional guide rings. High sealing efficiency and high wear resistance.

Diameter Range mm	Pressure Range MPa	Temperature Range °C	Velocity m/s
25 - 300	Up to 50	-30 to +200	Up to 0.5

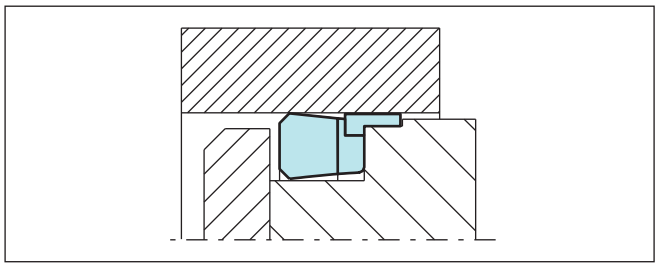

Polypac® B/NWO - KR

Same sealing element as B/NOW with an additional retaining ring in front to allow easier installation.

Diameter Range mm	Pressure Range MPa	Temperature Range °C	Velocity m/s
25 - 300	Up to 50	-30 to +200	Up to 0.5

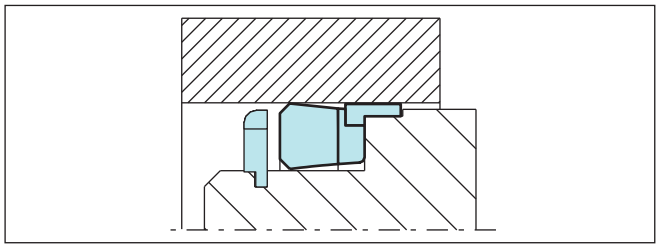

Polypac® B/NEO

Single acting piston seal for dynamic applications. Installed in open grooves. The nitrile sealing element is supported by a vulcanised cotton fabric reinforced ring with additional anti-extrusion ring. High sealing efficiency and wear resistance.

Diameter Range mm	Pressure Range MPa	Temperature Range °C	Velocity m/s
30 - 65	Up to 40	-30 to +130	Up to 0.5

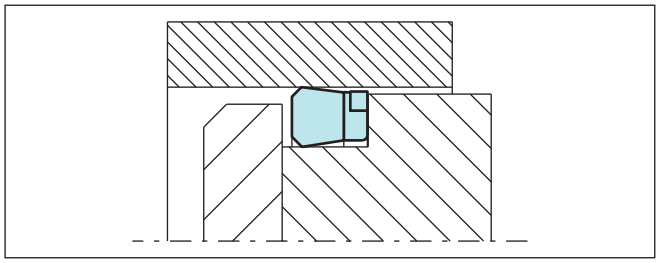

Turcon® Variseal® W

Single acting piston seal energised by a special helical spring. Its main advantage lies in its low friction and constant preloading force over a relatively large deformation range.

The Turcon® Variseal® W is used wherever friction has to be kept within a narrow tolerance zone.

Diameter Range mm	Pressure Range MPa	Temperature Range °C	Velocity m/s
8 - 2500	Up to 40	-70 to +260	Up to 15

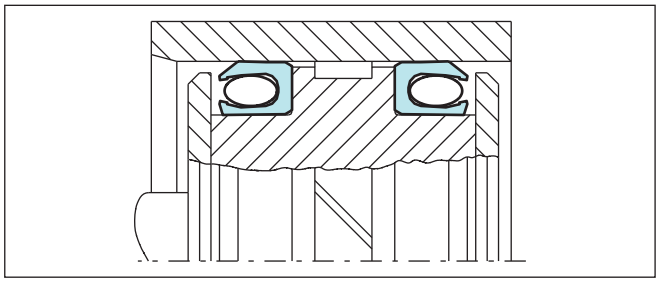

Turcon® Variseal® M2 CR

Single acting sealing element comprising a U-shaped Turcon® ring and a Stainless Steel energising V spring. Low friction with no Stick-slip, minimal break out force and high wear resistance. Resistant to most liquids and chemicals. Unlimited shelf life.

With integrated back up rings in material Zurcon® Z43 for higher pressures or larger gaps.

Diameter Range mm	Pressure Range MPa	Temperature Range °C	Velocity m/s
8 - 330	Up to 100	-45 to +260	Up to 5

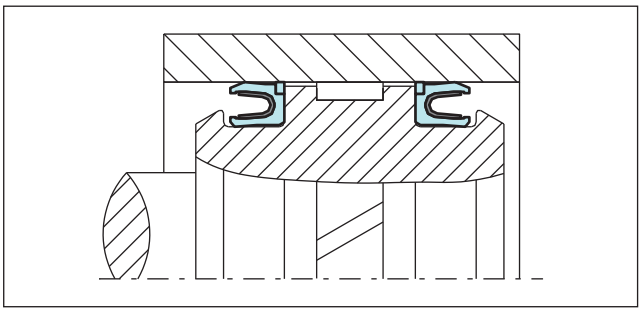

Turcon® Glyd Ring® CR

Double acting O Ring energised Piston Seal for dynamic applications. Installed in closed grooves including grooves to ISO 7425/1 as piston Turcon® Glyd Ring®. Low friction with no Stick-slip, minimal break out force and high wear resistance with integrated back up rings for higher pressures or larger gaps.

Diameter Range mm	Pressure Range MPa	Temperature Range °C	Velocity m/s
10 - 2700	Up to 100	-45 to +200	Up to 5

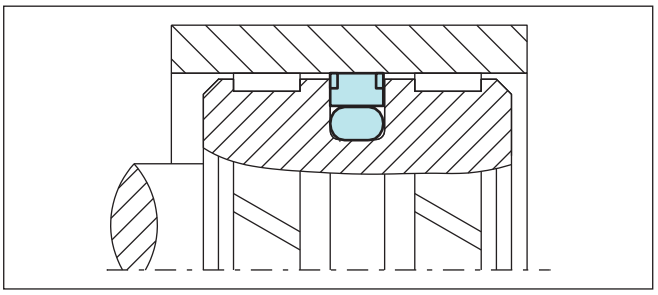

Turcon® Glyd Ring® Hz

Double acting O Ring energised Piston Seal for dynamic applications. Special design on the sealing based on two face to face Stepseal® profiles. The seal width is close to groove width to avoid axial movements.

The Glyd Ring® Hz is particularly dedicated to short strokes and high frequency applications. Installed in grooves according to ISO 7425 as piston Turcon® Glyd Ring®.

Diameter Range mm	Pressure Range MPa	Temperature Range °C	Velocity m/s
8 - 2700	Up to 40	-45 to +200	Up to 15

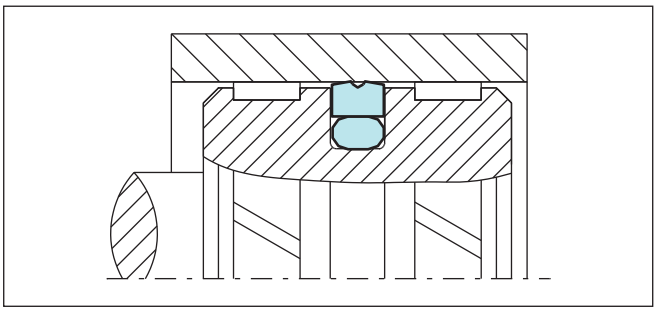

Captive Turcon® Glyd Ring®

For special applications where the Glyd Ring® has to slide across dimensional changes (e.g. go from a small diameter with sealing efficiency over the seal to a larger diameter with no sealing efficiency or vice versa).

In such applications Standard Glyd Ring® would be pressed out of the groove.

Diameter Range mm	Pressure Range MPa	Temperature Range °C	Velocity m/s
15 - 2700	Up to 60	-45 to +200	Up to 15

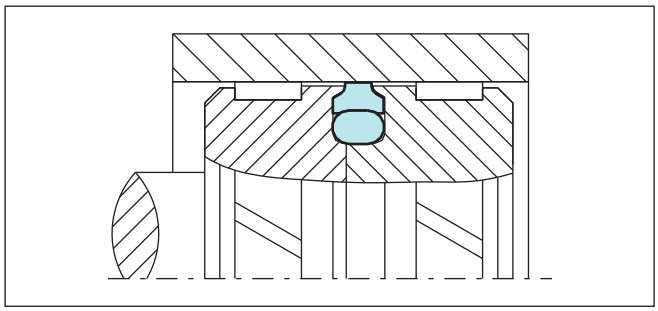

Turcon® Stepseal® 2A

Single acting primary seal for applications requiring stabilized seal position in the groove. A further development of Turcon® Stepseal® 2K by adding a stabilising edge, which prevents the seal from "tilting", cursed by seal-system pressure build-up between seals, in tandem configuration. It also increases assembly robustness through protection of the seal face during insertion of the rod. Same high sealing properties as Stepseal® 2K. Stepseal® 2A is used as primary seal in piston sealing systems preferably together with a secondary seal from the range of Turcon® and Zurcon® seals.

Installation in the same grooves as Turcon® Stepseal® 2K and grooves according to ISO 7425/1. Standard TSS Part Number is available.

Diameter Range mm	Pressure Range MPa	Temperature Range °C	Velocity m/s
10 - 2700	60	-45 to +200	Up to 15

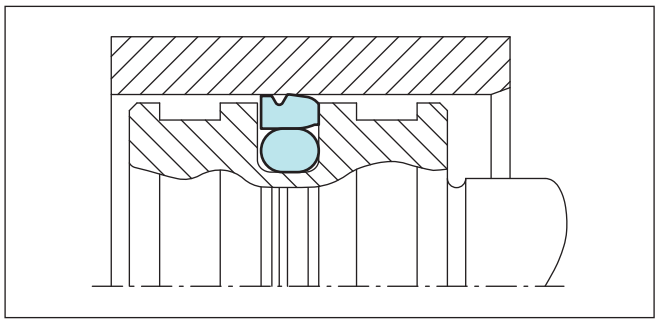

Turcon® Stepseal® 2A CR

Single acting O-Ring energized piston seal for dynamic applications. High sealing efficiency, low friction with no Stickslip, minimal break out force and high wear resistance with integrated back up ring for higher pressures or bigger gaps.Installed in closed grooves including grooves acc. ISO 7425/1

Standard TSS Part Number is available.

Diameter Range mm	Pressure Range MPa	Temperature Range °C	Velocity m/s
10 - 2700	100	-45 to +200	Up to 5

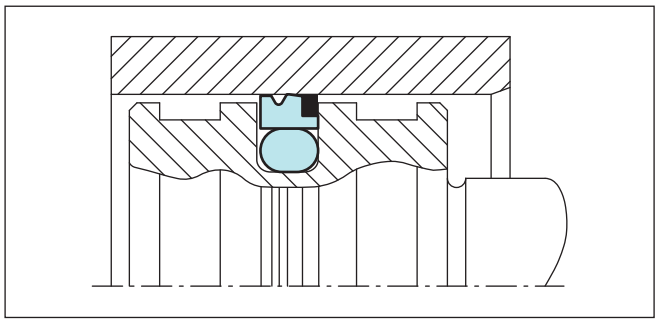

Special Turcon® AQ-Seal®

A double acting rubber energized seal development for sealing between two media, e.g. fluid/gas separation by incorporating a limited footprint elastomer Slim Bean Seal inset into the dynamic sealing face. Recommended for piston accumulators preferably in tandem configuration with a Turcon® Stepseal® V.

Installation in grooves according to ISO 7425 (the same as for standard Turcon® AQ-Seal®).

Diameter Range mm	Pressure Range MPa	Temperature Range °C	Velocity m/s
16 - 2300	40	-30 to +200	Up to 3

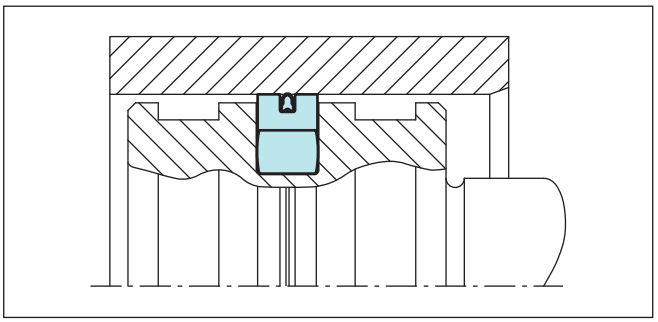

Turcon® Buffer Ring

Turcon® Buffer Ring is an uncut Piston Ring. With notches on one side the Ring is a single acting seal often used as protector of a common sealing system against peak pressures where the notch prevents risk of pressure trap. If a double acting sealing effect is required it is necessary to install two Buffer Rings, back to back, to take the pressure from both sides.For linear, helical and rotary movements.

Standard TSS Part Number is available.

Diameter Range mm	Pressure Range MPa	Temperature Range °C	Velocity m/s
8 - 2700	80	+5 to +160	Up to 15 (10 rotary)

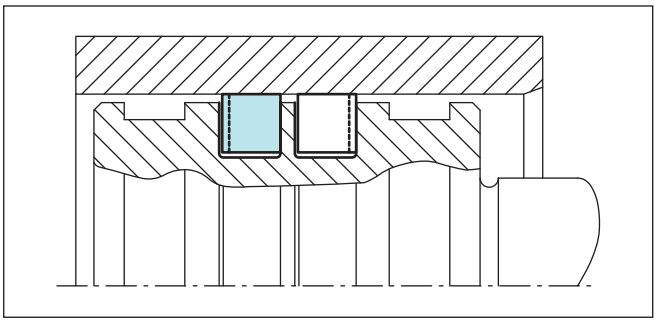

Part III
Scrapers

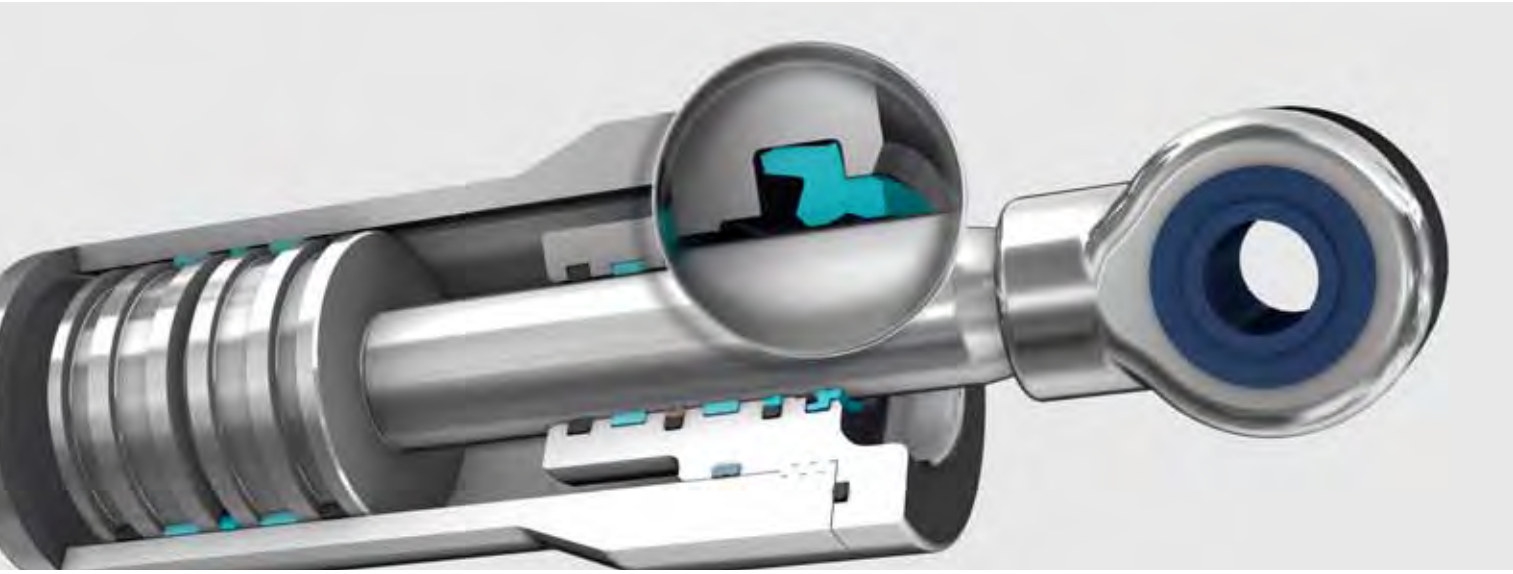

Contents

Choice of the Scraper Element 4
Turcon® Excluder® 2 9
Turcon® Excluder® 5 19
Zurcon® Excluder® 500 29
Turcon® Excluder® F 35
Turcon® Excluder® G 45
Scraper DA 17 55
Zurcon® Scraper DA 22 61
Zurcon® Scraper DA 24 67
Scraper WRM 73
Zurcon® Scraper ASW 81
Zurcon® Scraper WNE 87
Zurcon® Scraper WNV 93
Scraper WSA 99
Zurcon® Scraper SWP 107
Metal Scraper 113
Non Standard Scrapers 119

■ Choice of the Scraper Element

Scrapers are installed in hydraulic cylinders to wipe any dirt, foreign particles, chips, moisture, etc. from the piston rods as they are retracted into the system, thus preventing contamination of the hydraulic medium which would otherwise damage wear rings, seals and other components.

Single and double-acting scrapers can be used, depending on the application and the sealing system. They differ quite distinctly in their function: single-acting scrapers are designed to keep out contamination from the outside; double-acting scrapers have the additional function of optimising the sealing system and scraping off the existing residual fluid film, to avoid any external leakage.

In order to satisfy both the different technical and economic demands, there is a complete range of scrapers with optimised geometries made with high-quality materials.

Before selecting the scraper and the material, it is essential to know all the desired functional parameters. The table on following pages allows a preliminary choice of the scraper type and material, according to the specific requirements of the application.

Further general informations together with specific design and installation instructions for the particular scraper type and material can be found.

Note on Ordering

All multi-element standard scrapers are generally supplied as a complete set. The supply includes scraper and energizing element. The O-Ring does not have to be ordered separately. It is also possible, however, to use other O-Ring materials from our O-Ring Catalogue. In this case, please order the scraper and O-Ring separately.

Older designs of scrapers no longer contained in this catalogue obviously continue to be available. When possible, however, for new applications we recommend the use of DIN/ISO series listed in the catalogue.

The sizes contained in this catalogue are generally available from stock and can be supplied at short notice. We reserve the right to modify our article structure without prior notice.

Please do not hesitate to contact our Technical Department for further information on specific applications and special technical questions.

Table I Selection Criteria for Scrapers

Scraper		Application				Standard	Size Range	Groove Type	Action		Technical Data*		Recommended Scraper Material
											Temp. Range **	Speed	
Type	Page	Field of Application	Light	Medium	Heavy	ISO/DIN	mm	mm	Single	Double	s	m/s	
Turcon® Excluder® 2	9	Industrial hydraulics	●	●	●	6195 Type D	4 - 2600	Split <30 Closed >30		X	-45/+200	15	Turcon® M12
		Machine tools	●	●	●								
		Injection molding machines	●	●	●								
		Servo hydraulic cylinders	●	●	●								Turcon® T46
		Robotics	●	●	●								
Turcon® Excluder® 5	19	Heavy duty mobile and industrial hydraulics	●	●	●	6195 Type D	20 - 2600	Split <30 Closed >30		X	-45/+200	15	Turcon® M12 / Turcon® T46
		Presses	●	●	●		20 - 2200				-45/+110	2	Zurcon® Z52
		Steel mills	●	●	●								
Zurcon® Excluder® 500	29	Mobile hydraulics	●	●	●	6195 Type D	12 - 130	Split <25 Closed >25		X	-30/+80	1	Zurcon® Z05
Turcon® Excluder® F	35	Machine tools	●	●		-	19 - 1000	Closed >19		X	-45/+200	15	Turcon® M12
		Automation	●	●									
		Valves	●	●									Turcon® T46
		Small industrial hydraulics	●	●									
Turcon® Excluder® G	45	Steel mills		●	●	-	100-1000	Closed >120		X	-45/+200	5	Turcon® M12
		Off-road hydraulics		●	●								Turcon® T46
		Large valve stems		●	●			Closed >100			-45/+110	1	Zurcon® Z52
		Ceramic presses		●	●								
Scraper DA 17	55	Industrial hydraulics	●	●		-	10 - 440	Split <18 Closed >18		X	-30/+110	1	NBR
		Machine tools	●	●									
		Presses	●	●									

* The data above are maximum values and cannot be used at the same time.
** Temperature Range is depending on choise of elastomer material and Media.

Scrapers

Scraper		Application				Standard	Size Range	Groove Type	Ac-tion		Technical Data*		Recom-mended Scraper Material
											Temp. Range **	Speed	
Type	Page	Field of Application	Light	Medium	Heavy	ISO/DIN	mm	mm	Single	Double	s	m/s	
Zurcon® Scraper DA 22	61	ISO standard cylinder	●	●	●	6195 Type C	5 - 180	Split <18 Closed >18		X	-35/+100	1	Zurcon® Z201
		Industrial hydraulic cylinders	●	●	●								
Zurcon® Scraper DA 24	67	Mobile hydraulics	●	●	●	-	45 - 290	Closed		X	-35/+110	0.5	Zurcon® Z201
		Construction machinery	●	●	●								
		Agriculture machinery	●	●	●								
Scraper WRM	73	Agriculture machinery	●	●		-	12 - 260	Closed	X		-30/+110	1	NBR
		Handling equipment	●	●									
Zurcon® Scraper ASW	81	Agriculture machinery	●	●		-	8 - 125	Split <14 Closed >14	X		-35/+100	1	Zurcon® Z201
		Mobile hydraulic machinery	●	●									
Zurcon® Scraper WNE	87	Agriculture machinery	●	●	●	-	8 - 250	Closed	X		-35/+100	1	Zurcon® Z201
		Mobile hydraulic machinery	●	●	●								
Zurcon® Scraper WNV	93	Agriculture machinery	●	●	●	6195 Type A	16 - 100	Closed		X	-35/+100	1	Zurcon® Z201
		Mobile hydraulic machinery	●	●	●								
		ISO standard cylinder	●	●	●								
		Lift trucks	●	●	●								
		Cargo tailboards	●	●	●								
		Steering cylinders	●	●	●								
Scraper WRM/C-WSA	99	Agriculture machinery	●	●		-	16 - 120	Open	X		-30/+110	1	NBR + Metal
		Standard hydraulic cylinder	●	●									

* The data above are maximum values and cannot be used at the same time.
** Temperature Range is depending on choise of elastomer material and Media.

TRELLEBORG
SEALING SOLUTIONS

Scrapers

Scraper		Application				Standard	Size Range	Groove Type	Ac-tion		Technical Data*		Recom-mended Scraper Material
											Temp. Range **	Speed	
Type	Page	Field of Application	Light	Medium	Heavy	ISO/DIN	mm	mm	Single	Double	s	m/s	
Zurcon® Scraper SWP	107	Construction machinery		●	●	-	25 - 190	Open	X		-35/+100	1	Zurcon® Z201 + Metal
		Link pin seals		●	●								
Metal Scraper	113	Agriculture machinery	●	●	●	-	12 - 220	Open	X		-40/+110	1	Metal + NBR + Brass
		Mobile hydraulic machinery	●	●	●								
		ISO standard cylinder	●	●	●								

* The data above are maximum values and cannot be used at the same time.
** Temperature Range is depending on choise of elastomer material and Media.

Turcon® Excluder® 2

Double Acting

Rubber Energized Double-acting Scraper

Material:
Turcon® and Zurcon®

■ Turcon® Excluder® 2

Description

The Turcon® Excluder® 2 is a double-acting scraper with two geometrically different scraper lips which are installed back-to-back. Excluder® 2 is always installed together with an elastic O-Ring in one groove. The scraper function is performed by the Excluder® 2. The O-Ring maintains the pressure of the scraper lips against the sliding surface and can compensate any deflections of the piston rod.

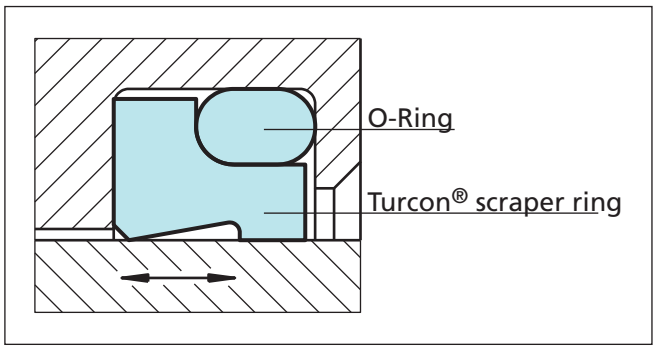

Figure 1 Turcon® Excluder® 2

Excluder® 2 has two functions:

- Scrape contaminants from the retracting piston rod and thus to protect the system from soiling
- Hold back the residual oil film on the extending piston rod on the medium side.

Excluder® 2 is used in conjunction with our rod seals Turcon® Stepseal® 2K or Zurcon® Rimseal, i.e. seals with hydrodynamic backpumping function.

Advantages

- Outstanding sliding properties
- Stick-slip-free, no sticking
- Can compensate for deflections of the piston rod or plunger
- Space-saving construction
- Very good scraping effect against outside contaminants, even with firmly adhered dirt, etc.
- Very good scraping effect from the inside against the residual oil film adhering to the surface of the piston rod
- Very high resistance to hydraulic media
- Available for all diameters up to 2.600 mm (Turcon®) and up to 2.200 mm (Zurcon® Z51/Z52)
- ISO/DIN 6195 Type D installation dimensions

Technical Data

Operating conditions:

Speed:	Up to 15 m/s for Turcon® materials Up to 2 m/s for Zurcon® materials
Temperature:	45 °C to +200 °C (Turcon®) -45 °C to +110 °C (Zurcon® Z51/Z52) -60 °C to +80 °C (Zurcon® Z80) (depending on O-Ring materials)
Media:	Mineral oil-based hydraulic fluids, flame retardant hydraulic fluids, environmentally safe hydraulic fluids (bio-oils), phosphate ester, water, air and others, depending on the O-Ring material compatibility.

Important Note:
The above data are maximum values and cannot be used at the same time. e.g. the maximum operating speed depends on material type, pressure, temperature and gap value.
Temperature range also dependent on medium.

Materials

The following material combinations have proven effective for hydraulic applications:

All round material for light to medium hydraulic applications with reciprocating, short stroke or helical movements in mineral oils, flame retardant hydraulic fluids HFC, phosphate ester, bio-oils or fluids having less satisfactory lubricating properties:

Turcon® Excluder® 2:	Turcon® M12	
O-Ring:	NBR, 70 Shore A FKM, 70 Shore A	N V
Set code:	M12N or M12V	

For medium to heavy applications with reciprocating movements in mineral oils and other media with good lubrication:

Turcon® Excluder® 2:	Turcon® T46	
O-Ring:	NBR, 70 Shore A FKM, 70 Shore A	N V
Set code:	T46N or T46V	

For specific applications, all Turcon® materials are available.

Other viable material combinations are listed in Table III.

Design and Installation Instructions

Excluder® 2 scrapers can be installed in split and closed grooves (installation dimensions, see Table IV). Installation in closed grooves is dependent on the rod diameter, profile cross-section of the scraper and on the cord cross-section of the corresponding O-Ring, see Table II.

Table II Installation in Closed Grooves

Turcon® Excluder® 2 Series No.	Rod Diameter d	O-Ring Cross-Section d_2
WE30	> 30	1.78
WE31	> 30	2.62
WE32	> 40	3.53
WE33	> 50	5.33
WE34	> 110	7.00
WE35	> 140	8.40

Table III Turcon® and Zurcon® Materials for Excluder ® 2

Material, Applications, Properties	Code	O–Ring Material Shore A	Code	O-Ring Operating Temp.* °C	Mating Surface Material	Speed m/s max.
Turcon® M12 First material choice for linear motion Overall improved properties For new constructions and updating For all commonly applied hydraulic fluids including fluids with low lubrication performance Lowest friction and best sliding properties Lowest wear on scrapers Improved absorption of abrasive contaminants No wear or abrasion of counter surface Mineral fibre and Additives filled Colour: Dark grey	M12	NBR - 70	N	-30 to +100	Steel Steel, hardened Steel, chrome plated (rod) Steel plated Cast iron Stainless steel Titanium	15
		NBR - 70 Low temp.	T	-45 to +80		
		FKM - 70	V	-10 to +200		
Turcon® T40 For lubricating and non-lubricating fluids High frequency and short strokes **Water hydraulics** Surface texture is not suitable for gas sealing Carbon fibre filled Colour: Grey	T40	NBR - 70	N	-30 to +100	Steel Steel, chrome plated (rod) Cast iron Stainless steel Aluminium	15
		NBR - 70 Low temp.	T	-45 to +80		
		FKM - 70	V	-10 to +200		
		EPDM-70	E**	-45 to +145		
Turcon® T46 For lubricated hydraulics in linear motion High compressive strength High extrusion resistance Very good sliding and wear properties BAM tested Bronze filled Colour: Light to dark brown, which may have variations in shading.	T46	NBR - 70	N	-30 to +100	Steel, hardened Steel, chrome plated (rod) Cast iron	15
		NBR - 70 Low temp.	T	-45 to +80		
		FKM - 70	V	-10 to +200		

* The O-Ring Operation Temperature is only valid in mineral hydraulic oil (except EPDM). ** Material not suitable for mineral oils.
*** Max. ø 2200 BAM: Tested by "Bundesanstalt Materialprüfung, Germany". Highlighted materials are standard.

Material, Applications, Properties	Code	O–Ring Material Shore A	Code	O-Ring Operating Temp.* °C	Mating Surface Material	Speed m/s max.
Zurcon® Z51* **** For mineral oil based fluids Very high abrasion and extrusion resistance For counter surface with rougher surface finish Hard to install Limited chemical resistance Max. working temperature 110 °C Cast polyurethane Colour: Yellow to light-brown	Z51	NBR - 70	N	-30 to +100	Steel Steel, hardened Cast iron Ceramic coating Stainless steel	2
		NBR - 70 Low temp.	T	-45 to +80		
Zurcon® Z52* **** For mineral oil based fluids High abrasion resistance For counter surface with rougher surface finish Good extrusion resistance Limited chemical resistance Max. working temperature 110 °C Cast polyurethane Colour: Turquoise	Z52	NBR - 70	N	-30 to +100	Steel Steel, hardened Steel, chrome plated (rod) Cast iron Stainless steel Aluminium	2
		NBR - 70 Low temp.	T	-45 to +80		
Zurcon® Z80 For lubricating and non-lubricating fluids Water based fluids, air and gases Dry air pneumatics High abrasion and extrusion resistance For service in abrasive conditions and media with particles Good chemical resistance Limited temperature capability (-60 to +80 °C) UHMWPE (Ultra High Molecular Weight Polyethylene)	Z80	NBR - 70	N	-30 to (+100)	Steel Steel, chrome plated (rod) Stainless steel Aluminium Ceramic coating	2
		NBR - 70 Low temp.	T	-45 to +80		
		EPDM-70	E**	-45 to (+145)		

* The O-Ring Operation Temperature is only valid in mineral hydraulic oil (except EPDM). ** Material not suitable for mineral oils.
*** Max. ø 2200 BAM: Tested by "Bundesanstalt Materialprüfung, Germany". Highlighted materials are standard.

■ Installation Recommendation

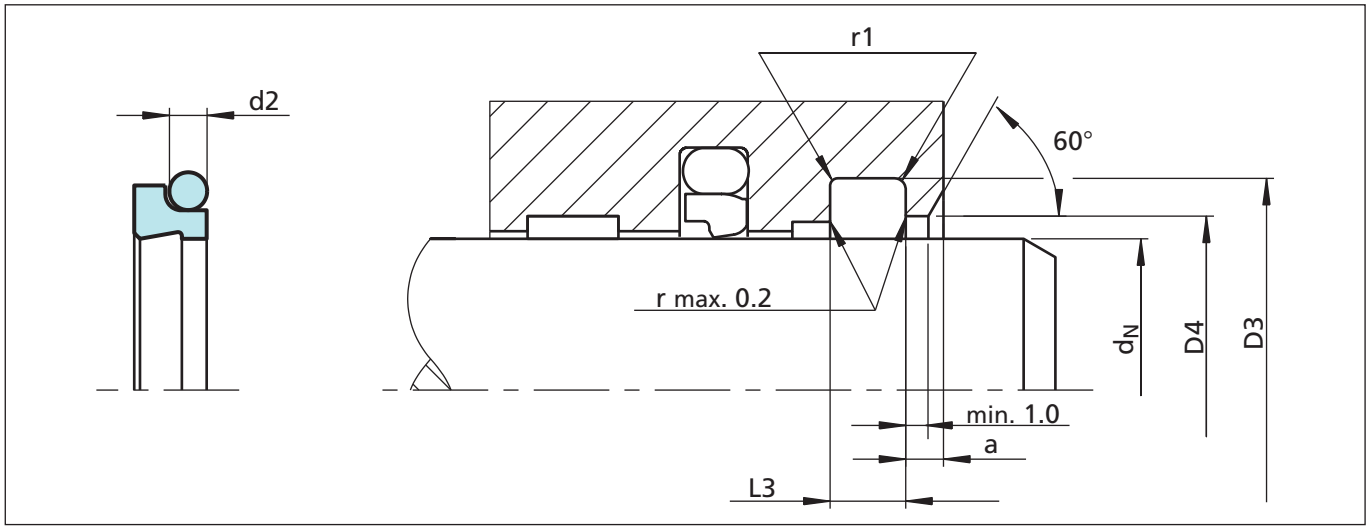

Figure 2 Installation drawing

Table IV Installation dimensions

Series No.	Rod Diameter d_N f8/h9		Groove Diameter	Groove Width	Bore Diameter	Step Width	O-Ring Cross-Section
	Recommended Range	Extended Range	D_3 H9	L_3 +0.2	D_4 H11	a min.	d_2
WE30	4.0 - 11.9	4.0 - 130.0	dN + 4.8	3.7	d + 1.5	2.0	1.78
WE31	12.0 - 64.9	10.0 - 245.0	dN + 6.8	5.0	d + 1.5	2.0	2.62
WE32	65.0 - 250.9	25.0 - 400.0	dN + 8.8	6.0	d + 1.5	3.0	3.53
WE33	251.0 - 420.9	40.0 - 655.0	dN + 12.2	8.4	d + 2.0	4.0	5.33
WE34	421.0 - 650.9	110.0 - 655.0	dN + 16.0	11.0	d + 2.0	4.0	7.00
WE35	651.0 - 999.9	140.0 - 999.9	dN + 20.0	14.0	d + 2.5	5.0	8.40
WE35X	≥ 1000.0	≥ 1000.0	dN + 20.0	14.0	d + 2.5	5.0	8.40

For diameters > 400 mm we recommend the use of Turcon® Excluder® 5.

Ordering Example

Turcon® Excluder® 2 with O-Ring, NBR
Rod diameter: d_N = 50.0 mm
Series: WE31 (from Table IV)
TSS Part No.: WE3100500 (from Table V)

Select the material from Table III. The corresponding code numbers are appended to the TSS Part No. (from Table V). Together they form the TSS Article No.
For all intermediate sizes not shown in Table V, the TSS Article No. can be determined from the example opposite.

* For diameters ≥ 1000.0 mm multiply only by factor 1. Example WE35 for diameter 1200.0 mm. TSS Article No.: WE35**X1200**-M12N.

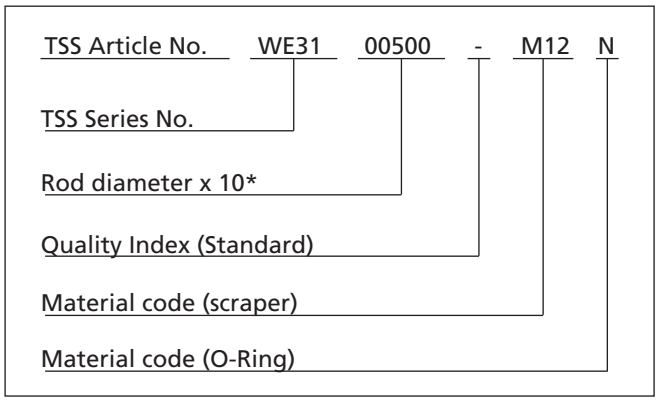

Table V Installation dimensions / TSS part numbers

Rod Diameter	Groove Diameter	Groove Width	Bore Diameter	Radius	Step Width	TSS Part No.	O-Ring Size
d_N f8/h9	D_3 H9	L_3 +0.2	D_4 H11	r_1 max.	a min		
4.0*)	**8.8**	**3.7**	**5.5**	**0.4**	**2.0**	**WE3000040**	**5.60 x 1.80**
5.0*)	**9.8**	**3.7**	**6.5**	**0.4**	**2.0**	**WE3000050**	**6.70 x 1.80**
6.0*)	**10.8**	**3.7**	**7.5**	**0.4**	**2.0**	**WE3000060**	**7.65 x 1.78**
8.0*)	**12.8**	**3.7**	**9.5**	**0.4**	**2.0**	**WE3000080**	**9.50 x 1.80**
10.0*)	**14.8**	**3.7**	**11.5**	**0.4**	**2.0**	**WE3000100**	**11.80 x 1.80**
12.0*)	**18.8**	**5.0**	**13.5**	**0.8**	**2.0**	**WE3100120**	**13.94 x 2.62**
14.0*)	**20.8**	**5.0**	**15.5**	**0.8**	**2.0**	**WE3100140**	**15.54 x 2.62**
15.0	21.8	5.0	16.5	0.8	2.0	WE3100150	17.12 x 2.62
16.0	**20.8**	**3.7**	**17.5**	**0.4**	**2.0**	**WE3000160**	**17.17 x 1.78**
16.0*)	**22.8**	**5.0**	**17.5**	**0.8**	**2.0**	**WE3100160**	**18.00 x 2.65**
18.0	**22.8**	**3.7**	**19.5**	**0.4**	**2.0**	**WE3000180**	**19.00 x 1.80**
18.0*)	**24.8**	**5.0**	**19.5**	**0.8**	**2.0**	**WE3100180**	**20.29 x 2.62**
20.0*)	**26.8**	**5.0**	**21.5**	**0.8**	**2.0**	**WE3100200**	**21.89 x 2.62**
22.0*)	**28.8**	**5.0**	**23.5**	**0.8**	**2.0**	**WE3100220**	**23.47 x 2.62**
25.0*)	**31.8**	**5.0**	**26.5**	**0.8**	**2.0**	**WE3100250**	**26.64 x 2.62**
28.0*)	**34.8**	**5.0**	**29.5**	**0.8**	**2.0**	**WE3100280**	**29.82 x 2.62**
30.0	34.8	3.7	31.5	0.4	2.0	WE3000300	31.47 x 1.78
30.0	36.8	5.0	31.5	0.8	2.0	WE3100300	31.42 x 2.62
32.0*)	**38.8**	**5.0**	**33.5**	**0.8**	**2.0**	**WE3100320**	**34.59 x 2.62**
35.0	41.8	5.0	36.5	0.8	2.0	WE3100350	36.17 x 2.62
36.0*)	**42.8**	**5.0**	**37.5**	**0.8**	**2.0**	**WE3100360**	**37.77 x 2.62**
37.0	43.8	5.0	38.5	0.8	2.0	WE3100370	39.34 x 2.62
40.0*)	**46.8**	**5.0**	**41.5**	**0.8**	**2.0**	**WE3100400**	**42.52 x 2.62**
42.0	48.8	5.0	43.5	0.8	2.0	WE3100420	44.12 x 2.62
45.0*)	**51.8**	**5.0**	**46.5**	**0.8**	**2.0**	**WE3100450**	**47.29 x 2.62**
49.0	55.8	5.0	50.5	0.8	2.0	WE3100490	50.47 x 2.62
50.0*)	**56.8**	**5.0**	**51.5**	**0.8**	**2.0**	**WE3100500**	**52.07 x 2.62**
50.8	57.6	5.0	52.3	0.8	2.0	WE3100508	52.07 x 2.62
54.0	60.8	5.0	55.5	0.8	2.0	WE3100540	55.25 x 2.62
55.0	61.8	5.0	56.5	0.8	2.0	WE3100550	56.82 x 2.62
56.0*)	**62.8**	**5.0**	**57.5**	**0.8**	**2.0**	**WE3100560**	**58.42 x 2.62**
60.0	66.8	5.0	61.5	0.8	2.0	WE3100600	61.60 x 2.62
63.0*)	**69.8**	**5.0**	**64.5**	**0.8**	**2.0**	**WE3100630**	**64.77 x 2.62**
65.0	73.8	6.0	66.5	1.0	3.0	WE3200650	66.27 x 3.53
70.0	**78.8**	**6.0**	**71.5**	**1.0**	**3.0**	**WE3200700**	**72.62 x 3.53**
75.0	83.8	6.0	76.5	1.0	3.0	WE3200750	75.79 x 3.53

The rod diameters in **bold** type comply with the recommendations of ISO 3320.
*) Installation in grooves according to ISO 6195 Type D.
Other dimensions and all intermediate sizes up to 2.600 mm diameter including imperial (inch) sizes can be supplied.

Rod Diameter	Groove Diameter	Groove Width	Bore Diameter	Radius	Step Width	TSS Part No.	O-Ring Size
d_N f8/h9	D_3 H9	L_3 +0.2	D_4 H11	r_1 max.	a min		
80.0	**88.8**	**6.0**	**81.5**	**1.0**	**3.0**	**WE3200800**	**82.14 x 3.53**
85.0	93.8	6.0	86.5	1.0	3.0	WE3200850	83.52 x 3.53
90.0	**98.8**	**6.0**	**91.5**	**1.0**	**3.0**	**WE3200900**	**91.67 x 3.53**
95.0	103.8	6.0	96.5	1.0	3.0	WE3200950	98.02 x 3.53
100.0	**108.8**	**6.0**	**101.5**	**1.0**	**3.0**	**WE3201000**	**101.19 x 3.53**
105.0	113.8	6.0	106.5	1.0	3.0	WE3201050	107.54 x 3.53
110.0	**118.8**	**6.0**	**111.5**	**1.0**	**3.0**	**WE3201100**	**110.72 x 3.53**
115.0	123.8	6.0	116.5	1.0	3.0	WE3201150	117.07 x 3.53
120.0	128.8	6.0	121.5	1.0	3.0	WE3201200	120.24 x 3.53
125.0	**133.8**	**6.0**	**126.5**	**1.0**	**3.0**	**WE3201250**	**126.59 x 3.53**
130.0	138.8	6.0	131.5	1.0	3.0	WE3201300	132.94 x 3.53
135.0	143.8	6.0	136.5	1.0	3.0	WE3201350	136.12 x 3.53
137.0	145.8	6.0	138.5	1.0	3.0	WE3201370	139.29 x 3.53
140.0	**148.8**	**6.0**	**141.5**	**1.0**	**3.0**	**WE3201400**	**142.47 x 3.53**
145.0	153.8	6.0	146.5	1.0	3.0	WE3201450	145.64 x 3.53
150.0	158.8	6.0	151.5	1.0	3.0	WE3201500	151.99 x 3.53
160.0	**168.8**	**6.0**	**161.5**	**1.0**	**3.0**	**WE3201600**	**158,34 x 3.53**
170.0	178.8	6.0	171.5	1.0	3.0	WE3201700	171.04 x 3.53
180.0	**188.8**	**6.0**	**181.5**	**1.0**	**3.0**	**WE3201800**	**177.39 x 3.53**
190.0	198.8	6.0	191.5	1.0	3.0	WE3201900	190.09 x 3.53
200.0	**208.8**	**6.0**	**201.5**	**1.0**	**3.0**	**WE3202000**	**202.79 x 3.53**
210.0	218.8	6.0	211.5	1.0	3.0	WE3202100	209.14 x 3.53
220.0	**228.8**	**6.0**	**221.5**	**1.0**	**3.0**	**WE3202200**	**221.84 x 3.53**
230.0	238.8	6.0	231.5	1.0	3.0	WE3202300	228.19 x 3.53
240.0	248.8	6.0	241.5	1.0	3.0	WE3202400	240.89 x 3.53
250.0	**258.8**	**6.0**	**251.5**	**1.0**	**3.0**	**WE3202500**	**253.59 x 3.53**
260.0	272.2	8.4	262.0	1.5	4.0	WE3302600	253.59 x 5.33
280.0	**292.2**	**8.4**	**282.0**	**1.5**	**4.0**	**WE3302800**	**278.77 x 5.33**
300.0	312.2	8.4	302.0	1.5	4.0	WE3303000	304.17 x 5.33
320.0	**332.2**	**8.4**	**322.0**	**1.5**	**4.0**	**WE3303200**	**329.57 x 5.33**
350.0	362.2	8.4	352.0	1.5	4.0	WE3303500	354.97 x 5.33
360.0	**372.2**	**8.4**	**362.0**	**1.5**	**4.0**	**WE3303600**	**354.97 x 5.33**
370.0	382.2	8.4	372.0	1.5	4.0	WE3303700	365.00 x 5.30
400.0	412.2	8.4	402.0	1.5	4.0	WE3304000	405.26 x 5.33
440.0	456.0	11.0	442.0	1.5	4.0	WE3404400	443.36 x 7.00
480.0	496.0	11.0	482.0	1.5	4.0	WE3404800	481.46 x 7.00

The rod diameters in **bold** type comply with the recommendations of ISO 3320.
*) Installation in grooves according to ISO 6195 Type D.
Other dimensions and all intermediate sizes up to 2.600 mm diameter including imperial (inch) sizes can be supplied.

Rod Diameter	Groove Diameter	Groove Width	Bore Diameter	Radius	Step Width	TSS Part No.	O-Ring Size
d_N f8/h9	D_3 H9	L_3 +0.2	D_4 H11	r_1 max.	a min		
600.0	616.0	11.0	602.0	1.5	4.0	WE3406000	608.08 x 7.00
630.0	646.0	11.0	632.0	1.5	4.0	WE3406300	633.48 x 7.00
680.0	700.0	14.0	682.5	2.0	5.0	WE3506800	680.00 x 8.40
700.0	720.0	14.0	702.5	2.0	5.0	WE3507000	705.00 x 8.40
770.0	790.0	14.0	772.5	2.0	5.0	WE3507700	774.10 x 8.40
828.0	848.0	14.0	830.5	2.0	5.0	WE3508280	830.00 x 8.40
880.0	900.0	14.0	882.5	2.0	5.0	WE3508800	888.00 x 8.40
900.0	920.0	14.0	902.5	2.0	5.0	WE3509000	904.00 x 8.40
1030.0	1050.0	14.0	1032.5	2.0	5.0	WE35X1030	1035.0 x 8.40
1180.0	1200.0	14.0	1182.5	2.0	5.0	WE35X1180	1185.0 x 8.40

The rod diameters in **bold** type comply with the recommendations of ISO 3320.
*) Installation in grooves according to ISO 6195 Type D.
Other dimensions and all intermediate sizes up to 2.600 mm diameter including imperial (inch) sizes can be supplied.

Turcon® Excluder® 5

Double Acting

Rubber Energized
Double-acting Scraper

Material:
Turcon® and Zurcon®

■ Turcon® Excluder® 5*

Description

The Turcon® Excluder® 5 is a patented double-acting scraper with two geometrically different scraper lips which are installed back-to-back. The scraper is installed together with an O-Ring as elastic energizing element in one groove. The scraper function is performed by the Excluder® 5. The O-Ring maintains the pressure of the scraper lips against the sliding surface and can compensate deflections of the piston rod.

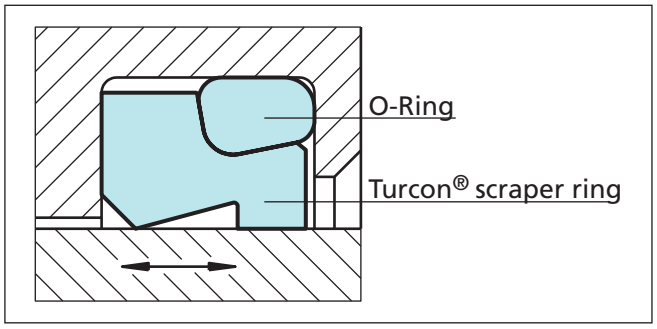

Figure 3 Turcon® Excluder® 5

Excluder® 5 has two functions:

- Scrape contaminants from the retracting piston rod and thus to protect the system from soiling
- Hold back the residual oil film on the extending piston rod on the medium side.

Excluder® 5 is used in conjunction with our rod seals Turcon® Stepseal® 2K or Zurcon® Rimseal, i.e. seals with a hydrodynamic back-pumping function. In contrast to the Excluder® 2, they are used particularly for heavy-duty applications such as in construction machinery, presses, etc.

Advantages

- Outstanding sliding properties
- Stick-slip-free, no sticking (Turcon® material)
- Tough scraper for heavy-duty operation
- Can compensate for deflections of the piston rod or plunger
- Very good scraping effect even against firmly adhered dirt, etc.
- Very good scraping effect from the inside against the residual oil film adhering to the surface of the piston rod
- Identical installation with that of the Zurcon® Excluder® 500
- Very high resistance to hydraulic media
- Available for all diameters up to 2.600 mm (Turcon®), up to 2.200 mm (Zurcon® Z51/Z52).
- ISO/DIN 6195 Type D installation dimensions

Technical Data

Operating conditions:

Speed:	Up to 15 m/s for Turcon® materials Up to 2 m/s for Zurcon® materials
Temperature:	-45 °C to +200 °C (Turcon®) -45 °C to +110 °C (Zurcon® Z51/Z52) -60 °C to +80 °C (Zurcon® Z80) (depending on O-Ring material)
Media:	Mineral oil-based hydraulic fluids, flame retardant hydraulic fluids, environmentally safe hydraulic fluids (bio-oils), phosphate ester, water, air and others, depending on the scraper and O-Ring material compatibility.

Important Note:
The above data are maximum values and cannot be used at the same time. e.g. the maximum operating speed depends on material type, pressure, temperature and gap value.
Temperature range also dependent on medium.

Materials

The following material combinations has proven effective for most applications:

All round material for hydraulic applications with reciprocating, short stroke or helical movements in mineral oils, flame retardant hydraulic fluids HFC, phosphate ester, bio-oils or fluids having less satisfactory lubricating properties:

Turcon® Excluder® 5:	Turcon® M12	
O-Ring:	NBR, 70 Shore A FKM, 70 Shore A	N V
Set code:	M12N or M12V	

For medium to heavy applications with reciprocating movements in mineral oils and other media with good lubrication:

Turcon® Excluder® 5:	Turcon® T46	
O-Ring:	NBR, 70 Shore A	N
	FKM, 70 Shore A	V
Set code:	T46N or T46V	

For specific applications, all Turcon® materials are available.

Other viable material combinations are listed in Table VII.

Design and Installation Instructions

Excluder® 5 scrapers can be installed in split and closed grooves (installation dimensions, see Table VIII).

Installation in closed grooves is dependent on the rod diameter, profile cross-section of the scraper and on the cross-section of the corresponding O-Ring, see Table VI.

* Patent-No. EP 023 5568

Table VI Installation in Closed Grooves

Turcon® Excluder® 5 Series No.	Rod Diameter d_N	O-Ring Cross-Section d_2
WE50	> 30.0	2.62
WE51	> 40.0	2.62
WE52	> 70.0	3.53
WE53	> 100.0	5.33
WE54	> 140.0	7.00
WE55	> 180.0	8.40

Table VII Turcon® and Zurcon® Materials for Excluder ® 5

Material, Applications, Properties	Code	O–Ring Material Shore A	Code	O-Ring Operating Temp.* °C	Mating Surface Material	Speed m/s max.
Turcon® M12 First material choice for linear motion Overall improved properties For new constructions and updating For all commonly applied hydraulic fluids including fluids with low lubrication performance Lowest friction and best sliding properties Lowest wear on scrapers Improved absorption of abrasive contaminants No wear or abrasion of counter surface Mineral fibre and Additives filled Colour: Dark grey	M12	NBR - 70	N	-30 to +100	Steel Steel, hardened Steel, chrome plated (rod) Cast iron Stainless steel Titanium	15
		NBR - 70 Low temp.	T	-45 to +80		
		FKM - 70	V	-10 to +200		
Turcon® T40 For lubricating and non-lubricating fluids High frequency and short strokes **Water hydraulics** Surface texture is not suitable for gas sealing Carbon fibre filled Colour: Grey	T40	NBR - 70	N	-30 to +100	Steel Steel, chrome plated (rod) Cast iron Stainless steel Aluminium	15
		NBR - 70 Low temp.	T	-45 to +80		
		FKM - 70	V	-10 to +200		
		EPDM-70	E**	-45 to +145		
Turcon® T46 For lubricated hydraulics in linear motion High compressive strength High extrusion resistance Very good sliding and wear properties BAM tested Bronze filled Colour: Light to dark brown, which may have variations in shading.	T46	NBR - 70	N	-30 to +100	Steel, hardened Steel, chrome plated (rod) Cast iron	15
		NBR - 70 Low temp.	T	-45 to +80		
		FKM - 70	V	-10 to +200		

* The O-Ring Operation Temperature is only valid in mineral hydraulic oil (except EPDM). ** Material not suitable for mineral oils.
BAM: Tested by "Bundesanstalt Materialprüfung, Germany". Highlighted materials are standard.

Material, Applications, Properties	Code	O–Ring Material Shore A	Code	O-Ring Operating Temp.* °C	Mating Surface Material	Speed m/s max.
Zurcon® Z51*** For mineral oil based fluids Linear and slowly turning movements Very high abrasion and extrusion resistance For counter surface with rougher surface finish Hard to install Limited chemical resistance Max. working temperature 110 °C Cast polyurethane Colour: Yellow to light-brown	Z51	NBR - 70	N	-30 to +100	Steel Steel, hardened Cast iron Ceramic coating Stainless steel	2
		NBR - 70 Low temp.	T	-45 to +80		
Zurcon® Z52*** For mineral oil based fluids High abrasion resistance For counter surface with rougher surface finish Good extrusion resistance Limited chemical resistance Max. working temperature 110 °C Cast polyurethane Colour: Turquoise	Z52	NBR - 70	N	-30 to +100	Steel Steel, hardened Steel, chrome plated (rod) Cast iron Stainless steel Aluminium	1
		NBR - 70 Low temp.	T	-45 to +80		
Zurcon® Z80 For lubricating and non-lubricating fluids Water based fluids, air and gases Dry air pneumatics High abrasion and extrusion resistance For service in abrasive conditions and media with particles Good chemical resistance Limited temperature capability (-60 to +80 °C) UHMWPE (Ultra High Molecular Weight Polyethylene)	Z80	NBR - 70	N	-30 to (+100)	Steel Steel, chrome plated (rod) Stainless steel Aluminium Ceramic coating	2
		NBR - 70 Low temp.	T	-45 to +80		
		EPDM-70	E**	-45 to (+145)		

* The O-Ring Operation Temperature is only valid in mineral hydraulic oil (except EPDM). ** Material not suitable for mineral oils.
BAM: Tested by "Bundesanstalt Materialprüfung, Germany". Highlighted materials are standard.

■ Installation Recommendation

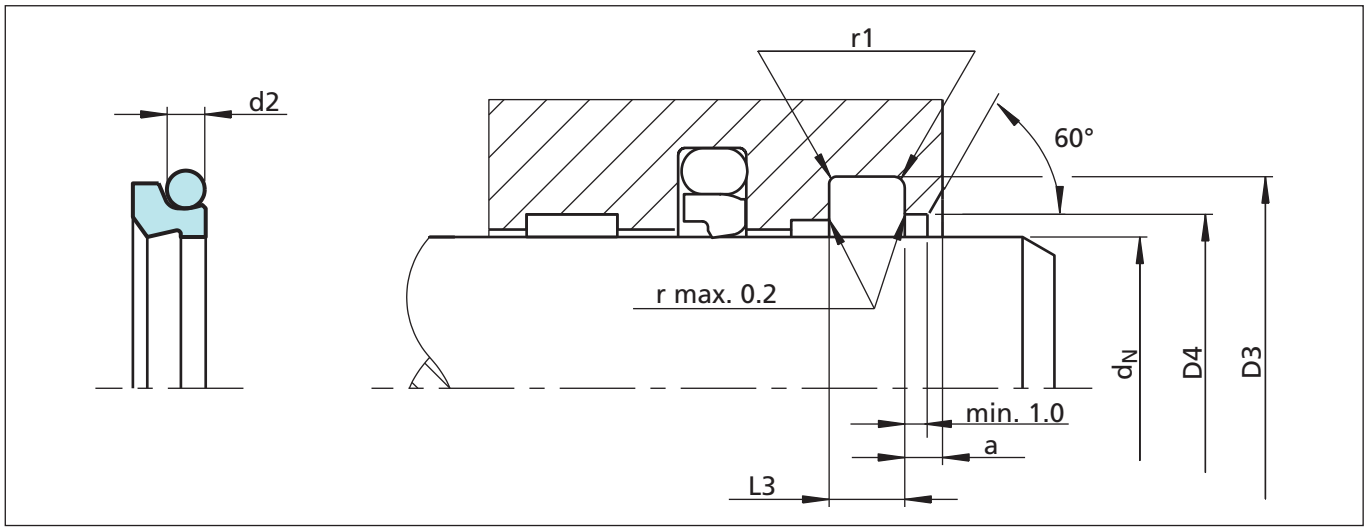

Figure 4 Installation drawing

Table VIII Installation dimensions

Series No.	Rod Diameter d_N f8/h9		Groove Diameter	Groove Width	Bore Diameter	Step Width	O-Ring Cross-Section
	Recommended Range	Extended Range	D_3 H9	L_3 +0.2	D_4 H11	a min	d_2
WE50	19.0 - 39.9	19.0 - 100.0	d_N + 7.6	4.2	d + 1.5	3.0	2.62
WE51	40.0 - 69.9	30.0 - 200.0	d_N + 8.8	6.3	d + 1.5	3.0	2.62
WE52	70.0 - 139.9	70.0 - 360.0	d_N + 12.2	8.1	d + 2.0	4.0	3.53
WE53	140.0 - 399.9	100.0 - 650.0	d_N + 16.0	9.5	d + 2.5	5.0	5.33
WE54	400.0 - 649.9	200.0 - 650.0	d_N + 24.0	14.0	d + 2.5	8.0	7.00
WE55	650.0 - 999.9	400.0 - 999.9	d_N + 27.3	16.0	d + 2.5	10.0	8.40
WE55X	≥ 1000	≥ 1000	d_N + 27.3	16.0	d + 2.5	10.0	8.40

Ordering example

Turcon® Excluder® 5 with O-Ring in NBR
Rod diameter: d_N = 50.0 mm
Series: WE51 (from Table VIII)
TSS Part No.: WE5100500 (from Table IX)

Select the material from Table VII. The corresponding code numbers are appended to the TSS Part No. (from Table IX). Together they form the TSS Article No.
For all intermediate sizes not shown in Table IX, the TSS Article No. can be determined from the example opposite.

* For diameters ≥ 1000.0 mm multiply only by factor 1. Example WE55 for diameter 1200.0 mm. TSS Article No.: WE55**X1200**-M12N.

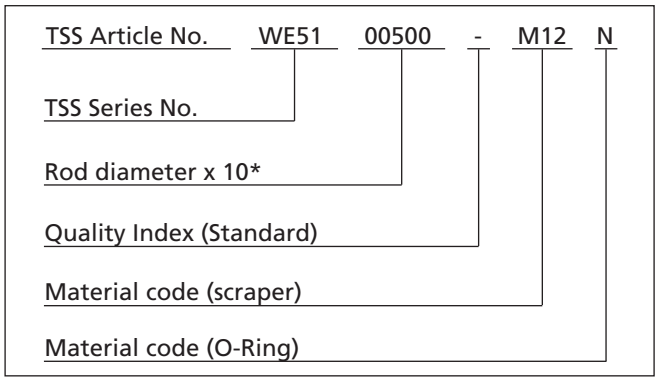

Table IX Installation dimensions / TSS part numbers

Rod Diameter	Groove Diameter	Groove Width	Bore Diameter	Radius	Step Width	TSS Part No.	O-Ring Size
d_N f8/h9	D_3 H9	L_3 +0.2	D_4 H11	r_1 max	a min.		
20.0	**27.6**	**4.2**	**21.5**	**0.8**	**3.0**	**WE5000200**	**21.89 x 2.62**
25.0	**32.6**	**4.2**	**26.5**	**0.8**	**3.0**	**WE5000250**	**28.24 x 2.62**
28.0	**35.6**	**4.2**	**29.5**	**0.8**	**3.0**	**WE5000280**	**29.82 x 2.62**
30.0	37.6	4.2	31.5	0.8	3.0	WE5000300	32.99 x 2.62
32.0	**39.6**	**4.2**	**33.5**	**0.8**	**3.0**	**WE5000320**	**34.59 x 2.62**
36.0	**43.6**	**4.2**	**37.5**	**0.8**	**3.0**	**WE5000360**	**37.77 x 2.62**
40.0*)	**48.8**	**6.3**	**41.5**	**0.8**	**3.0**	**WE5100400**	**44.12 x 2.62**
42.0	50.8	6.3	43.5	0.8	3.0	WE5100420	45.69 x 2.62
45.0*)	**53.8**	**6.3**	**46.5**	**0.8**	**3.0**	**WE5100450**	**48.90 x 2.62**
50.0*)	**58.8**	**6.3**	**51.5**	**0.8**	**3.0**	**WE5100500**	**53.64 x 2.62**
55.0	63.8	6.3	56.5	0.8	3.0	WE5100550	58.42 x 2.62
56.0*)	**64.8**	**6.3**	**57.5**	**0.8**	**3.0**	**WE5100560**	**59.99 x 2.62**
60.0	68.8	6.3	61.5	0.8	3.0	WE5100600	63.17 x 2.62
63.0*)	**71.8**	**6.3**	**64.5**	**0.8**	**3.0**	**WE5100630**	**66.34 x 2.62**
65.0	73.8	6.3	66.5	0.8	3.0	WE5100650	67.95 x 2.62
70.0*)	**78.8**	**6.3**	**71.5**	**0.8**	**3.0**	**WE5100700**	**72.69 x 2.62**
70.0*)	**82.2**	**8.1**	**72.0**	**1.0**	**4.0**	**WE5200700**	**75.79 x 3.53**
75.0	87.2	8.1	77.0	1.0	4.0	WE5200750	78.97 x 3.53
80.0*)	**88.8**	**6.3**	**81.5**	**1.0**	**3.0**	**WE5100800**	**82.22 x 2.62**
80.0*)	**92.2**	**8.1**	**82.0**	**1.0**	**4.0**	**WE5200800**	**85.32 x 3.53**
85.0	97.2	8.1	87.0	1.0	4.0	WE5200850	88.49 x 3.53
90.0*)	**98.8**	**6.3**	**91.5**	**1.0**	**3.0**	**WE5100900**	**94.92 x 2.62**
90.0*)	**102.2**	**8.1**	**92.0**	**1.0**	**4.0**	**WE5200900**	**94.84 x 3.53**
97.0	109.2	8.1	99.0	1.0	4.0	WE5200970	101.19 x 3.53
99.0	111.2	8.1	101.0	1.0	4.0	WE5200990	104.37 x 3.53
100.0*)	**108.8**	**6.3**	**101.5**	**1.0**	**3.0**	**WE5101000**	**101.27 x 2.62**
100.0*)	**112.2**	**8.1**	**102.0**	**1.0**	**4.0**	**WE5201000**	**104.37 x 3.53**
105.0	117.2	8.1	107.0	1.0	4.0	WE5201050	110.72 x 3.53
110.0*)	**118.8**	**6.3**	**111.5**	**1.0**	**3.0**	**WE5101100**	**113.97 x 2.62**
110.0*)	**122.2**	**8.1**	**112.0**	**1.0**	**4.0**	**WE5201100**	**113.89 x 3.53**
115.0	127.2	8.1	117.0	1.0	4.0	WE5201150	120.24 x 3.53
120.0	132.2	8.1	122.0	1.0	4.0	WE5201200	123.42 x 3.53
125.0*)	**133.8**	**6.3**	**126.5**	**1.0**	**3.0**	**WE5101250**	**126.67 x 2.62**

The rod diameters in **bold** type comply with the recommendations of ISO 3320.
*) Installation in grooves according to ISO 6195 Type D.
Other dimensions and all intermediate sizes up to 2.600 mm diameter including imperial (inch) sizes can be supplied.

Rod Diameter	Groove Diameter	Groove Width	Bore Diameter	Radius	Step Width	TSS Part No.	O-Ring Size
d_N f8/h9	D_3 H9	L_3 +0.2	D_4 H11	r_1 max	a min.		
125.0*)	**137.2**	**8.1**	**127.0**	**1.0**	**4.0**	**WE5201250**	**129.77 x 3.53**
125.4	137.6	8.1	127.4	1.0	4.0	WE5201254	129.77 x 3.53
130.0	142.2	8.1	132.0	1.0	4.0	WE5201300	136.12 x 3.53
135.0	147.2	8.1	137.0	1.0	4.0	WE5201350	139.29 x 3.53
140.0*)	**152.2**	**8.1**	**142.0**	**1.0**	**4.0**	**WE5201400**	**145.64 x 3.53**
140.0*)	**156.0**	**9.5**	**142.5**	**1.5**	**5.0**	**WE5301400**	**145.42 x 5.33**
140.5	156.5	9.5	143.0	1.5	5.0	WE5301405	145.42 x 5.33
150.0	166.0	9.5	152.5	1.5	5.0	WE5301500	151.77 x 5.33
153.0	169.0	9.5	155.5	1.5	5.0	WE5301530	158.12 x 5.33
155.0	171.0	9.5	157.5	1.5	5.0	WE5301550	158.12 x 5.33
160.0*)	**172.2**	**8.1**	**162.0**	**1.0**	**4.0**	**WE5201600**	**164.69 x 3.53**
160.0*)	**176.0**	**9.5**	**162.5**	**1.5**	**5.0**	**WE5301600**	**164.47 x 5.33**
165.0	181.0	9.5	167.5	1.5	5.0	WE5301650	170.82 x 5.33
170.0	186.0	9.5	172.5	1.5	5.0	WE5301700	177.17 x 5.33
175.0	191.0	9.5	177.5	1.5	5.0	WE5301750	177.17 x 5.33
180.0*)	**192.2**	**8.1**	**182.0**	**1.0**	**4.0**	**WE5201800**	**183.74 x 3.53**
180.0*)	**196.0**	**9.5**	**182.5**	**1.5**	**5.0**	**WE5301800**	**183.52 x 5.33**
188.2	204.2	9.5	190.7	1.5	5.0	WE5301882	189.87 x 5.33
190.0	206.0	9.5	192.5	1.5	5.0	WE5301900	196.22 x 5.33
192.0	208.0	9.5	194.5	1.5	5.0	WE5301920	196.22 x 5.33
200.0*)	**212.2**	**8.1**	**202.0**	**1.0**	**4.0**	**WE5202000**	**202.79 x 3.53**
200.0*)	**216.0**	**9.5**	**202.5**	**1.5**	**5.0**	**WE5302000**	**202.57 x 5.33**
211.0	227.0	9.5	213.5	1.5	5.0	WE5302110	215.27 x 5.33
220.0*)	**232.2**	**8.1**	**222.0**	**1.0**	**4.0**	**WE5202200**	**221.84 x 3.53**
220.0*)	**236.0**	**9.5**	**222.5**	**1.5**	**5.0**	**WE5302200**	**221.62 x 5.33**
240.0	256.0	9.5	242.5	1.5	5.0	WE5302400	247.02 x 5.33
250.0*)	**262.2**	**8.1**	**252.0**	**1.0**	**4.0**	**WE5202500**	**253.59 x 3.53**
250.0*)	**266.0**	**9.5**	**252.5**	**1.5**	**5.0**	**WE5302500**	**253.37 x 5.33**
260.0	276.0	9.5	262.5	1.5	5.0	WE5302600	266.07 x 5.33
270.0	286.0	9.5	272.5	1.5	5.0	WE5302700	278.77 x 5.33
280.0*)	**292.2**	**8.1**	**282.0**	**1.5**	**4.0**	**WE5202800**	**278.99 x 3.53**
280.0*)	**296.0**	**9.5**	**282.5**	**1.5**	**5.0**	**WE5302800**	**278.77 x 5.33**
300.0	316.0	9.5	302.5	1.5	5.0	WE5303000	304.17 x 5.33
320.0*)	**332.2**	**8.1**	**322.0**	**1.5**	**4.0**	**WE5203200**	**329.79 x 3.53**
320.0*)	**336.0**	**9.5**	**322.5**	**1.5**	**5.0**	**WE5303200**	**329.57 x 5.33**
330.0	346.0	9.5	332.5	1.5	5.0	WE5303300	329.57 x 5.33

The rod diameters in **bold** type comply with the recommendations of ISO 3320.
*) Installation in grooves according to ISO 6195 Type D.
Other dimensions and all intermediate sizes up to 2.600 mm diameter including imperial (inch) sizes can be supplied.

Rod Diameter	Groove Diameter	Groove Width	Bore Diameter	Radius	Step Width	TSS Part No.	O-Ring Size
d_N f8/h9	D_3 H9	L_3 +0.2	D_4 H11	r_1 max	a min.		
350.0	366.0	9.5	352.5	1.5	5.0	WE5303500	354.97 x 5.33
360.0*)	**372.2**	**8.1**	**362.0**	**1.5**	**4.0**	**WE5203600**	**355.19 x 3.53**
360.0*)	**376.0**	**9.5**	**362.5**	**1.5**	**5.0**	**WE5303600**	**365.00 x 5.30**
380.0	396.0	9.5	382.5	1.5	5.0	WE5303800	380.37 x 5.33
400.0	424.0	14.0	402.5	1.5	8.0	WE5404000	405.26 x 7.00
440.0	464.0	14.0	442.5	1.5	8.0	WE5404400	443.36 x 7.00
450.0	474.0	14.0	452.5	1.5	8.0	WE5404500	456.06 x 7.00
480.0	504.0	14.0	482.5	1.5	8.0	WE5404800	481.46 x 7.00
500.0	524.0	14.0	502.5	1.5	8.0	WE5405000	506.86 x 7.00
560.0	584.0	14.0	562.5	1.5	8.0	WE5405600	557.66 x 7.00
600.0	624.0	14.0	602.5	1.5	8.0	WE5406000	608.08 x 7.00
650.0	677.3	16.0	652.5	2.0	10.0	WE5506500	649.00 x 8.40
680.0	707.3	16.0	682.5	2.0	10.0	WE5506800	680.00 x 8.40
700.0	727.3	16.0	702.5	2.0	10.0	WE5507000	715.00 x 8.40
770.0	797.3	16.0	772.5	2.0	10.0	WE5507700	774.10 x 8.40
785.0	812.3	16.0	787.5	2.0	10.0	WE5507850	810.00 x 8.40
800.0	827.3	16.0	802.5	2.0	10.0	WE5508000	810.00 x 8.40
810.0	837.3	16.0	812.5	2.0	10.0	WE5508100	810.00 x 8.40
900.0	927.3	16.0	902.5	2.0	10.0	WE5509000	910.00 x 8.40
950.0	977.3	16.0	952.5	2.0	10.0	WE5509500	959.10 x 8.40
1000.0	1027.3	16.0	1002.5	2.0	10.0	WE55X1000	1010.0 x 8.40
1040.0	1067.3	16.0	1042.5	2.0	10.0	WE55X1040	1050.0 x 8.40
1130.0	1157.3	16.0	1132.5	2.0	10.0	WE55X1130	1140.0 x 8.40
1200.0	1227.3	16.0	1202.5	2.0	10.0	WE55X1200	1210.0 x 8.40
2600.0	2627.3	16.0	2602.5	2.0	10.0	WE55X2600	2610.0 x 8.40

The rod diameters in **bold** type comply with the recommendations of ISO 3320.
*) Installation in grooves according to ISO 6195 Type D.
Other dimensions and all intermediate sizes up to 2.600 mm diameter including imperial (inch) sizes can be supplied.

Zurcon® Excluder® 500

Double Acting

Rubber Energized

Flexible Double-acting Scraper

Material:
Zurcon®

■ Zurcon® Excluder® 500*

Description

Zurcon® Excluder® 500 is a patented double-acting scraper. It has an identical design and function as that of the Turcon® Excluder® 5 and is fully interchangeable with this scraper. It is more flexible and thus easy to install, but cannot withstand such high speeds and temperatures as the Excluder® 5. The Excluder® 500 is injection moulded from high-grade wear-resistant polyurethane. It is suitable as an inexpensive scraper element where large quantities are required. It is preferably used in conjunction with our rod seal Turcon® Stepseal® 2K with hydrodynamic back-pumping function.

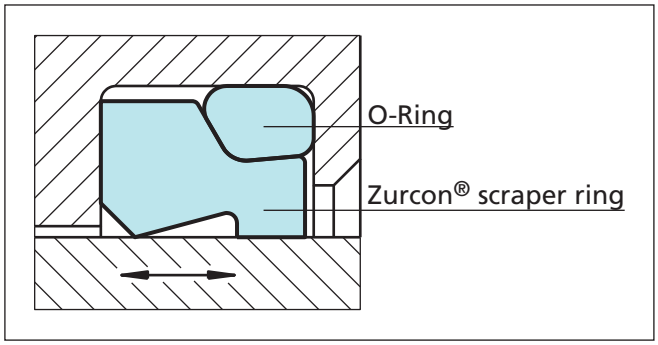

Figure 5 Zurcon® Excluder® 500

Advantages

- High abrasion resistance, suitable for heavy-duty applications
- Good scraping effect both internal and external
- High flexibility
- Compensates radial deflections of the piston rod
- Identical in installation with Excluder® 5
- Low cost, economical solution
- ISO/DIN 6195 Type D installation dimensions

Technical Data

Speed:	Max. 1 m/s
Temperature:	-30 °C to +80 °C
Media:	Mineral oil-based hydraulic fluids.

Important Note:
The above data are maximum values and cannot be used at the same time. e.g. the maximum operating speed depends on material type, pressure, temperature and gap value.
Temperature range also dependent on medium.

Materials

Standard material:

Excluder® 500:	Zurcon® Z05
Colour:	Turquoise
O-Ring:	NBR, 70 Shore A
Set Code:	Z05N

Design and Installation Instructions

Excluder 500® scrapers can be installed in split and closed grooves. Installation in closed grooves is possible above a rod diameter of 25 mm. For smaller diameters, a split groove is recommended.

For new constructions we recommend the scraper DA 24.

* Patent No. EP 023 5568

■ Installation Recommendation

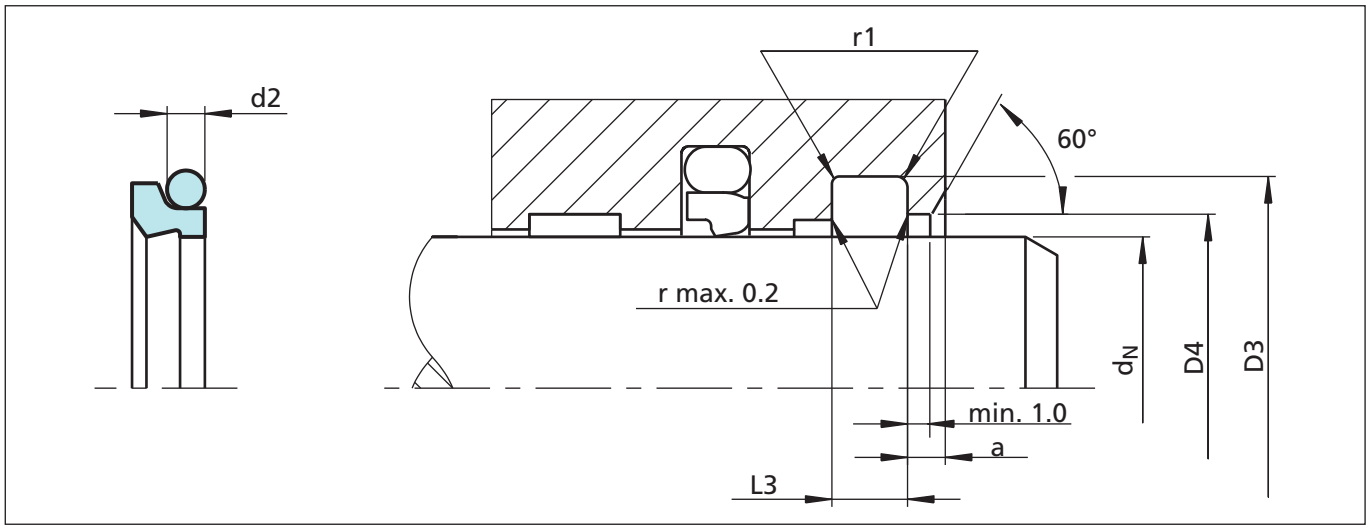

Figure 6 Installation drawing

Table X Installation dimensions

Series No.	Rod Diameter	Groove Diameter	Groove Width	Bore Diameter	Step Width	O-Ring Cross Section
	d_N f8/h9	D_3 H9	L_3 +0.2	D_4 H11	a min	d_2
WEP0	12.0 - 36.0	d_N + 7.6	4.2	d_N + 1.5	3.0	2.62
WEP1	36.0 - 65.0	d_N + 8.8	6.3	d_N + 1.5	3.0	2.62
WEP2	70.0 - 130.0	d_N + 12.2	8.1	d_N + 2.0	4.0	3.53

Up to 25 mm diameter we recommend the use of a split groove.

Ordering Example

Zurcon® Excluder 500® with O-Ring
Rod diameter: d_N = 50.0 mm
Series: WEP1 (from Table X)
TSS Part No.: WEP100500 (from Table XI)
Materials: Excluder® of Zurcon® Z05
O-Ring of NBR 70 Shore A

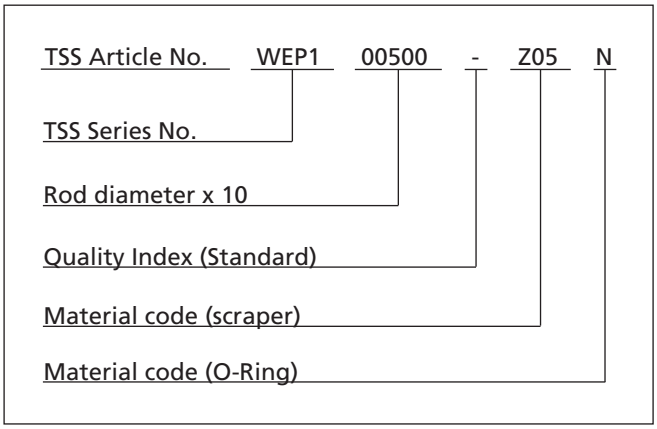

Table XI Installation dimensions / TSS part numbers

Rod Diameter	Groove Diameter	Groove Width	Bore Diameter	Radius	Step Width	TSS Part No.	O-Ring Size
dN f8/h9	**D_3** H9	**L_3** +0.2	**D_4** H11	**r_1** max	**a** min.		
12.0	**19.6**	**4.2**	**13.5**	**0.8**	**3.0**	**WEP000120**	**15.00 x 2.62**
14.0	**21.6**	**4.2**	**15.5**	**0.8**	**3.0**	**WEP000140**	**17.12 x 2.62**
18.0	**25.6**	**4.2**	**19.5**	**0.8**	**3.0**	**WEP000180**	**20.29 x 2.62**
20.0	**27.6**	**4.2**	**21.5**	**0.8**	**3.0**	**WEP000200**	**21.89 x 2.62**
22.0	**29.6**	**4.2**	**23.5**	**0.8**	**3.0**	**WEP000220**	**25.07 x 2.62**
25.0	**32.6**	**4.2**	**26.5**	**0.8**	**3.0**	**WEP000250**	**28.24 x 2.62**
28.0	**35.6**	**4.2**	**29.5**	**0.8**	**3.0**	**WEP000280**	**29.82 x 2.62**
30.0	37.6	4.2	31.5	0.8	3.0	WEP000300	32.99 x 2.62
32.0	**39.6**	**4.2**	**33.5**	**0.8**	**3.0**	**WEP000320**	**34.59 x 2.62**
35.0	42.6	4.2	36.5	0.8	3.0	WEP000350	37.77 x 2.62
36.0	**43.6**	**4.2**	**37.5**	**0.8**	**3.0**	**WEP000360**	**37.77 x 2.62**
36.0	**44.8**	**6.3**	**37.5**	**0.8**	**3.0**	**WEP100360**	**39.34 x 2.62**
40.0*)	**48.8**	**6.3**	**41.5**	**0.8**	**3.0**	**WEP100400**	**44.12 x 2.62**
45.0*)	**53.8**	**6.3**	**46.5**	**0.8**	**3.0**	**WEP100450**	**48.90 x 2.62**
50.0*)	**58.8**	**6.3**	**51.5**	**0.8**	**3.0**	**WEP100500**	**53.64 x 2.62**
55.0	63.8	6.3	56.5	0.8	3.0	WEP100550	58.42 x 2.62
56.0*)	**64.8**	**6.3**	**57.5**	**0.8**	**3.0**	**WEP100560**	**59.99 x 2.62**
60.0	68.8	6.3	61.5	0.8	3.0	WEP100600	63.17 x 2.62
63.0*)	**71.8**	**6.3**	**64.5**	**0.8**	**3.0**	**WEP100630**	**66.34 x 2.62**
65.0	73.8	6.3	66.5	0.8	3.0	WEP100650	67.95 x 2.62
70.0*)	**82.2**	**8.1**	**72.0**	**1.0**	**4.0**	**WEP200700**	**75.79 x 3.53**
75.0	87.2	8.1	77.0	1.0	4.0	WEP200750	78.97 x 3.53
80.0*)	**92.2**	**8.1**	**82.0**	**1.0**	**4.0**	**WEP200800**	**85.32 x 3.53**
85.0	97.2	8.1	87.0	1.0	4.0	WEP200850	88.49 x 3.53
90.0*)	**102.2**	**8.1**	**92.0**	**1.0**	**4.0**	**WEP200900**	**94.84 x 3.53**
95.0	107.2	8.1	97.0	1.0	4.0	WEP200950	101.19 x 3.53
100.0*)	**112.2**	**8.1**	**102.0**	**1.0**	**4.0**	**WEP201000**	**104.37 x 3.53**
105.0	117.2	8.1	107.0	1.0	4.0	WEP201050	110.72 x 3.53
110.0*)	**122.2**	**8.1**	**112.0**	**1.0**	**4.0**	**WEP201100**	**113.89 x 3.53**
120.0	132.2	8.1	122.0	1.0	4.0	WEP201200	123.42 x 3.53
125.0*)	**137.2**	**8.1**	**127.0**	**1.0**	**4.0**	**WEP201250**	**129.77 x 3.53**
130.0	142.2	8.1	132.0	1.0	4.0	WEP201300	132.94 x 3.53

The rod diameters in **bold** type comply with the recommendations of ISO 3320.
*) Installation in grooves according to ISO 6195 Type D.
Other dimensions on request.

Turcon® Excluder® F

Double Acting

Rubber Energized Double-acting Scraper

Material:
Turcon® and Zurcon®

■ Turcon® Excluder® F

Description

The Turcon® Excluder® F is a double-acting scraper with two geometrically different scraper lips, which are positioned back-to-back. The scraper is always installed with 2 O-Rings as elastic energizing elements in one groove. The scraper function itself is performed by the Excluder® F, Turcon® element. The O-Rings maintains the pressure of the scraper lips against the sliding surface and compensates deflections of the piston rod.

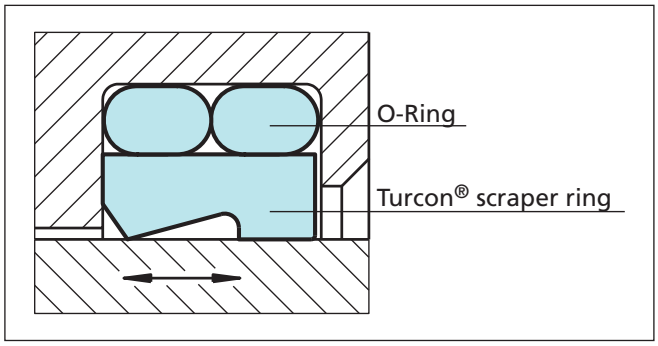

Figure 7 Turcon® Excluder F

Excluder® F has two functions:

- Scrape contaminants from the retracting piston rod and thus to protect the system from soiling
- Hold back the residual oil film on the extending piston rod on the medium side.
- Excluder® F is preferably used in conjunction with our rod seals Turcon® Stepseal® 2K or Zurcon® Rimseal, i.e. seals with a hydrodynamic back-pumping function. Application wise the Excluder® F is placed between Excluder® 2 and Excluder® 5 for medium to "light-heavy" duty such as in:
- Light construction machinery
- Truck crane
- Agriculture machines
- Hydraulic presses
- Injection moulding machines
- Hydraulic actuators

Advantages

In principle the same as for Excluder® 2 and 5:

- Outstanding sliding properties
- Stick-slip-free, no sticking for Turcon® materials
- Tough scraper particular in Zurcon® materials
- Can compensate for deflections of the piston rod or plunger
- Very good scraping effect even against firmly adhered dirt, etc.
- Very good sealing effect from the inside against the residual oil film adhering to the surface of the piston rod
- Identical installation as the Zurcon® Excluder® 500 and Excluder® 5 from WE50 to WE52
- Very high resistance to hydraulic media
- Available for diameters from 19 up to 2.600 mm (Turcon®), up to 2.200 mm (Zurcon® Z51/Z52)
- ISO/DIN 6195 Type D installation on recommended dimensions from ø40 to ø140 mm.

Disadvantages compared to Excluder® 2 and 5

- Require 2 pcs O-Rings
- Not completely axially locked in the groove
- More disposed to wrong installation.

Advantages compared to Excluder® 2 and 5

- Easier installation in closed groove
- Improved radial flexibility
- Improved sealing function due to O-Ring arrangement.

Technical Data

Operating conditions:

Speed:	15 m/s for Turcon® materials 2 m/s for Zurcon® Z80 1 m/s for Zurcon® Z51/Z52
Temperature:	-45 °C to +200 °C for Turcon® materials -60 °C to +80 °C for Zurcon® Z80 -45 °C to +110 °C for Zurcon® Z51/Z52 (depending on O-Ring materials)
Media:	Mineral oil-based hydraulic fluids, flame retardant hydraulic fluids, environmentally safe hydraulic fluids (bio-oils), phosphate ester, water, air and others, depending on scraper and O-ring material compatibility.

Important Note:
The above data are maximum values and cannot be used at the same time. e.g. the maximum operating speed depends on material type, environment, temperature and media.

Materials

The following material combination has proven effective for most applications:

All round material for hydraulic applications with reciprocating, short stroke or helical movements in mineral oils, flame retardant hydraulic fluids HFC, phosphate ester, bio-oils or fluids having less satisfactory lubricating properties:

Turcon® Excluder® F:	Turcon® M12
O-Ring:	NBR, 70 Shore A N FKM, 70 Shore A V
Set code:	M12N or M12V

For medium to heavy applications with reciprocating movements in mineral oils and other media with good lubrication:

Excluder® F	Turcon® T46
O-Ring:	NBR, 70 Shore A N FKM, 70 Shore A V
Set code:	T46N or T46V

For specific applications, all Turcon® materials are available.

Other viable material combinations are listed in Table XII

Design and Installation Instructions

All Excluder® F scrapers are preferably installed in closed grooves - installation dimensions see Table XIII.

Table XII Turcon® and Zurcon® Materials for Excluder® F

Material, Applications, Properties	Code	O–Ring Material Shore A	Code	O-Ring Operating Temp.* °C	Mating Surface Material	Speed m/s max.
Turcon® M12 First material choice for linear motion Overall improved properties For new constructions and updating For all commonly applied hydraulic fluids including fluids with low lubrication performance Lowest friction and best sliding properties Lowest wear on scrapers Improved absorption of abrasive contaminants No wear or abrasion of counter surface Mineral fibre and Additives filled Colour: Dark grey	M12	NBR - 70	N	-30 to +100	Steel Steel, hardened Steel, chrome plated (rod) Steel plated (rod) Cast iron Stainless steel Titanium	15
		NBR - 70 Low temp.	T	-45 to +80		
		FKM - 70	V	-10 to +200		
Turcon® T40 For lubricating and non-lubricating fluids High frequency and short strokes **Water hydraulics** Surface texture is not suitable for gas Carbon fibre filled Colour: Grey	T40	NBR - 70	N	-30 to +100	Steel Steel, chrome plated (rod) Cast iron Stainless steel Aluminium	15
		NBR - 70 Low temp.	T	-45 to +80		
		FKM - 70	V	-10 to +200		
		EPDM-70	E**	-45 to +145		
Turcon® T46 For lubricated hydraulics in linear motion High compressive strength High extrusion resistance Very good sliding and wear properties BAM tested Bronze filled Colour: Light to dark brown, which may have variations in shading.	T46	NBR - 70	N	-30 to +100	Steel, hardened Steel, chrome plated (rod) Cast iron	15
		NBR - 70 Low temp.	T	-45 to +80		
		FKM - 70	V	-10 to +200		
Zurcon® Z51*** For mineral oil based fluids Very high abrasion and extrusion resistance For counter surface with rougher surface finish Hard to installLimited chemical resistance Max. working temperature 110 °C Cast polyurethane Colour: Yellow to light-brown.	Z51	NBR - 70	N	-30 to +100	Steel Steel, hardened Cast iron Ceramic coating Stainless steel	1
		NBR - 70 Low temp.	T	-45 to +80		

* The O-Ring Operation Temperature is only valid in mineral hydraulic oil, except EPDM. BAM: Tested by "Bundesanstalt Materialprüfung, Germany". ** Material not suitable for mineral oils.
*** max. ø 2200 mm Highlighted materials are standard.

Material, Applications, Properties	Code	O–Ring Material Shore A	Code	O-Ring Operating Temp.* °C	Mating Surface Material	Speed m/s max.
Zurcon® Z52* ** For mineral oil based fluids High abrasion resistance For counter surface with rougher surface finish Good extrusion resistance Limited chemical resistance Max. working temperature 110 °C Cast polyurethane Colour: Turquoise.	**Z52**	NBR - 70	N	-30 to +100	Steel Steel, hardened Steel, chrome plated (rod) Cast iron Stainless steel Aluminium	1
		NBR - 70 Low temp.	T	-45 to +80		
Zurcon® Z80 For lubricating and non-lubricating fluids Water based fluids, air and gases Dry air pneumatics High abrasion and extrusion resistance For service in abrasive conditions and media with particles Good chemical resistance Limited temperature capability (-60 to +80 °C) UHMWPE (Ultra High Molecular Weight Polyethylene)	**Z80**	NBR - 70	N	-30 to (+100)	Steel Steel, chrome plated (rod) Stainless steel Aluminium Ceramic coating	2
		NBR - 70 Low temp.	T	-45 to +80		
		EPDM-70	E**	-45 to (+145)		

* The O-Ring Operation Temperature is only valid in mineral hydraulic oil, except EPDM. BAM: Tested by "Bundesanstalt Materialprüfung, Germany". ** Material not suitable for mineral oils.
*** max. ø 2200 mm Highlighted materials are standard.

■ Installation Recommendation

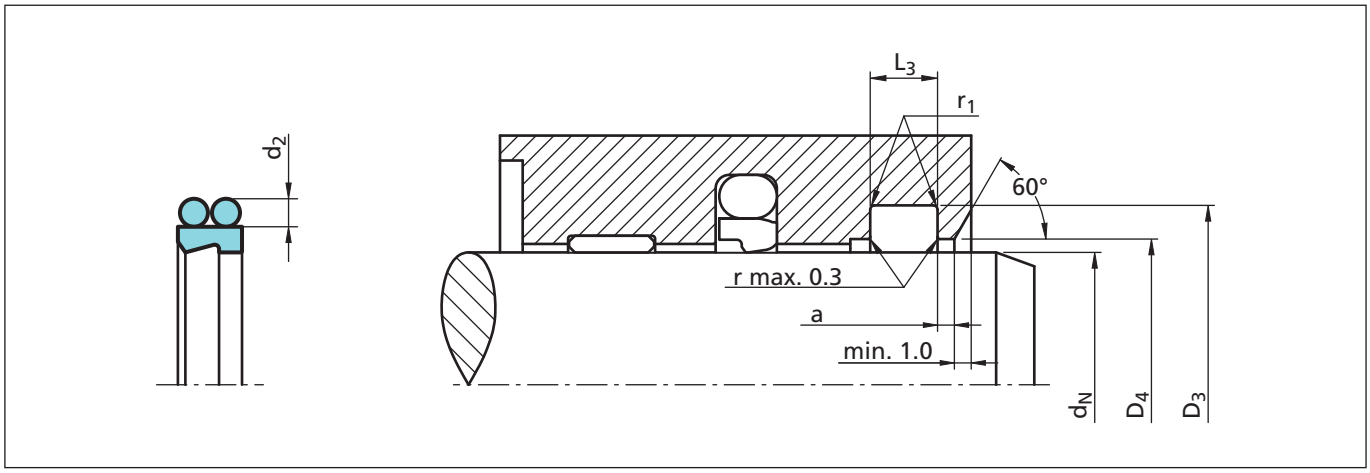

Figure 8 Installation drawing

Table XIII Installation dimensions – Standard recommendations

Series No.	Rod dN f8/h9		Groove Diameter	Groove Width	Bore Diameter	Radius	Step Width	O-Ring Cross-Section
	Recommended Range	Available Range	D_3 H9	L_3 +0.2	D_4 H11	r_1 max.	a min.	d_2
WEF0	19.0 - 39.9	19.0 - 130.0	d_N + 7.6	4.2	d + 1.0	0.4	3.0	1.78
WEF1	40.0 - 69.9	30.0 - 250.0	d_N + 8.8	6.3	d + 1.5	1.0	3.0	2.62
WEF2	70.0 - 139.9	50.0 - 450.0	d_N + 12.2	8.1	d + 2.0	1.2	4.0	3.53
WEF3	140.0 - 399.9	80.0 - 650.0	d_N + 16.0	11.5	d + 2.0	2.0	5.0	5.33
WEF4	400.0 - 649.9	180.0 - 650.0	d_N + 24.0	15.5	d + 2.5	2.5	8.0	7.00
WEF5	650.0 - 999.9	300.0 - 999.9	d_N + 27.3	18.0	d + 2.5	2.5	10.0	8.40

Sizes above 1000.0 mm are available on special part number.

Ordering example

Turcon® Excluder® F complete with O-Ring in NBR, standard application:

Series: WEF1 (from Table XIII)
Rod diameter: d_N = 50.0 mm
TSS Part No.: WEF100500 (from Table XIV)

Select the material from Table XII.

The corresponding code numbers are appended to the TSS Part No.

Together these form the TSS Article Number.

The TSS Article Number for all intermediate sizes not shown in Table XIV can be determined following the example below.

TSS Article No. WEF1 0 0500 - M12 N

- Series No. — WEF1
- Type (Standard) — 0
- Rod diameter x 10 — 0500
- Quality Index (Standard) — -
- Material Code (Seal Ring) — M12
- Material Code (O-Ring) — N

Table XIV Installation dimensions / TSS part numbers

Rod Diameter	Groove Diameter	Groove Width	Bore Diameter	Radius	Step Width	TSS Part No.	O-Ring Size
d_N f8/h9	D_3 H9	L_3 +0.2	D_4 H11	r_1 max.	a min.		
19.0	26.6	4.2	20.0	0.4	3.0	WEF000190	23.52 x 1.78
20.0	**27.6**	**4.2**	**21.0**	**0.4**	**3.0**	**WEF000200**	**23.52 x 1.78**
25.0	**32.6**	**4.2**	**26.0**	**0.4**	**3.0**	**WEF000250**	**29.87 x 1.78**
28.0	**35.6**	**4.2**	**29.0**	**0.4**	**3.0**	**WEF000280**	**33.05 x 1.78**
30.0	37.6	4.2	31.0	0.4	3.0	WEF000300	34.65 x 1.78
32.0	**39.6**	**4.2**	**33.0**	**0.4**	**3.0**	**WEF000320**	**36.27 x 1.78**
35.0	42.6	4.2	36.0	0.4	3.0	WEF000350	39.45 x 1.78
36.0	**43.6**	**4.2**	**37.0**	**0.4**	**3.0**	**WEF000360**	**41.00 x 1.78**
38.0	45.6	4.2	39.0	0.4	3.0	WEF000380	41.00 x 1.78
40.0*)	**48.8**	**6.3**	**41.5**	**0.8**	**3.0**	**WEF100400**	**44.12 x 2.62**
42.0	50.8	6.3	43.5	0.8	3.0	WEF100420	45.69 x 2.62
45.0*)	**53.8**	**6.3**	**46.5**	**0.8**	**3.0**	**WEF100450**	**48.90 x 2.62**
50.0*)	**58.8**	**6.3**	**51.5**	**0.8**	**3.0**	**WEF100500**	**53.64 x 2.62**
55.0	63.8	6.3	56.5	0.8	3.0	WEF100550	58.42 x 2.62
56.0*)	**64.8**	**6.3**	**57.5**	**0.8**	**3.0**	**WEF100560**	**59.99 x 2.62**
60.0	68.8	6.3	61.5	0.8	3.0	WEF100600	63.17 x 2.62
63.0*)	**71.8**	**6.3**	**64.5**	**0.8**	**3.0**	**WEF100630**	**66.34 x 2.62**
65.0	73.8	6.3	66.5	0.8	3.0	WEF100650	67.95 x 2.62
70.0*)	**82.2**	**8.1**	**72.0**	**1.0**	**4.0**	**WEF200700**	**75.79 x 3.53**
75.0	87.2	8.1	77.0	1.0	4.0	WEF200750	78.97 x 3.53
80.0*)	**92.2**	**8.1**	**82.0**	**1.0**	**4.0**	**WEF200800**	**85.32 x 3.53**
85.0	97.2	8.1	87.0	1.0	4.0	WEF200850	88.49 x 3.53
90.0*)	**102.2**	**8.1**	**92.0**	**1.0**	**4.0**	**WEF200900**	**94.84 x 3.53**
95.0	107.2	8.1	97.0	1.0	4.0	WEF200950	101.19 x 3.53
100.0*)	**112.2**	**8.1**	**102.0**	**1.0**	**4.0**	**WEF201000**	**104.37 x 3.53**
105.0	117.2	8.1	107.0	1.0	4.0	WEF201050	110.72 x 3.53
110.0*)	**122.2**	**8.1**	**112.0**	**1.0**	**4.0**	**WEF201100**	**113.89 x 3.53**
115.0	127.2	8.1	117.0	1.0	4.0	WEF201150	120.24 x 3.53
120.0	132.2	8.1	122.0	1.0	4.0	WEF201200	123.42 x 3.53
125.0*)	**137.2**	**8.1**	**127.0**	**1.0**	**4.0**	**WEF201250**	**129.77 x 3.53**
130.0	142.2	8.1	132.0	1.0	4.0	WEF201300	136.12 x 3.53
135.0	147.2	8.1	137.0	1.0	4.0	WEF201350	139.29 x 3.53
140.0*)	**152.2**	**8.1**	**142.0**	**1.0**	**4.0**	**WEF201400**	**145.64 x 3.53**
140.0	**156.0**	**11.5**	**142.0**	**2.0**	**5.0**	**WEF301400**	**145.42 x 5.33**
145.0	161.0	11.5	147.0	2.0	5.0	WEF301450	148.49 x 5.33
150.0	166.0	11.5	152.0	2.0	5.0	WEF301500	155.00 x 5.30

Rod Diameter	Groove Diameter	Groove Width	Bore Diameter	Radius	Step Width	TSS Part No.	O-Ring Size
d_N f8/h9	D_3 H9	L_3 +0.2	D_4 H11	r_1 max.	a min.		
155.0	171.0	11.5	157.0	2.0	5.0	WEF301550	158.12 x 5.33
160.0	**176.0**	**11.5**	**162.0**	**2.0**	**5.0**	**WEF301600**	**164.47 x 5.33**
165.0	181.0	11.5	167.0	2.0	5.0	WEF301650	170.82 x 5.33
170.0	186.0	11.5	172.0	2.0	5.0	WEF301700	175.00 x 5.30
175.0	191.0	11.5	177.0	2.0	5.0	WEF301750	180.00 x 5.30
180.0	**196.0**	**11.5**	**182.0**	**2.0**	**5.0**	**WEF301800**	**183.52 x 5.33**
185.0	201.0	11.5	187.0	2.0	5.0	WEF301850	189.87 x 5.33
190.0	206.0	11.5	192.0	2.0	5.0	WEF301900	196.22 x 5.33
195.0	211.0	11.5	197.0	2.0	5.0	WEF301950	196.22 x 5.33
200.0	**216.0**	**11.5**	**202.0**	**2.0**	**5.0**	**WEF302000**	**202.57 x 5.33**
210.0	226.0	11.5	212.0	2.0	5.0	WEF302100	215.27 x 5.33
220.0	**236.0**	**11.5**	**222.0**	**2.0**	**5.0**	**WEF302200**	**227.97 x 5.33**
230.0	246.0	11.5	232.0	2.0	5.0	WEF302300	234.32 x 5.33
240.0	256.0	11.5	242.0	2.0	5.0	WEF302400	247.02 x 5.33
250.0	**266.0**	**11.5**	**252.0**	**2.0**	**5.0**	**WEF302500**	**253.37 x 5.33**
260.0	276.0	11.5	262.0	2.0	5.0	WEF302600	266.07 x 5.33
270.0	286.0	11.5	272.0	2.0	5.0	WEF302700	278.77 x 5.33
280.0	**296.0**	**11.5**	**282.0**	**2.0**	**5.0**	**WEF302800**	**290.00 x 5.30**
290.0	306.0	11.5	292.0	2.0	5.0	WEF302900	291.47 x 5.33
300.0	316.0	11.5	302.0	2.0	5.0	WEF303000	304.17 x 5.33
310.0	326.0	11.5	312.0	2.0	5.0	WEF303100	315.00 x 5.30
320.0	**336.0**	**11.5**	**322.0**	**2.0**	**5.0**	**WEF303200**	**329.57 x 5.33**
330.0	346.0	11.5	332.0	2.0	5.0	WEF303300	329.57 x 5.33
340.0	356.0	11.5	342.0	2.0	5.0	WEF303400	345.00 x 5.30
350.0	366.0	11.5	352.0	2.0	5.0	WEF303500	354.97 x 5.33
360.0	**376.0**	**11.5**	**362.0**	**2.0**	**5.0**	**WEF303600**	**365.00 x 5.30**
370.0	386.0	11.5	372.0	2.0	5.0	WEF303700	365.00 x 5.30
380.0	396.0	11.5	382.0	2.0	5.0	WEF303800	387.00 x 5.30
390.0	406.0	11.5	392.0	2.0	5.0	WEF303900	380.37 x 5.33
400.0	416.0	11.5	402.0	2.0	5.0	WEF304000	405.26 x 5.33
400.0	424.0	15.5	402.5	2.5	8.0	WEF404000	412.00 x 7.00
420.0	444.0	15.5	422.5	2.5	8.0	WEF404200	430.66 x 7.00
440.0	464.0	15.5	442.5	2.5	8.0	WEF404400	450.00 x 7.00
460.0	484.0	15.5	462.5	2.5	8.0	WEF404600	468.76 x 7.00
480.0	504.0	15.5	482.5	2.5	8.0	WEF404800	494.16 x 7.00
500.0	524.0	15.5	502.5	2.5	8.0	WEF405000	506.86 x 7.00

Rod Diameter	Groove Diameter	Groove Width	Bore Diameter	Radius	Step Width	TSS Part No.	O-Ring Size
d_N f8/h9	D_3 H9	L_3 +0.2	D_4 H11	r_1 max.	a min.		
525.0	549.0	15.5	527.5	2.5	8.0	WEF405250	532.26 x 7.00
550.0	574.0	15.5	552.5	2.5	8.0	WEF405500	557.66 x 7.00
575.0	599.0	15.5	577.5	2.5	8.0	WEF405750	582.68 x 7.00
600.0	624.0	15.5	602.5	2.5	8.0	WEF406000	608.08 x 7.00
625.0	649.0	15.5	627.5	2.5	8.0	WEF406250	633.48 x 7.00
650.0	677.3	18.0	652.5	2.5	10.0	WEF506500	649.00 x 8.40
675.0	702.3	18.0	677.5	2.5	10.0	WEF506750	686.80 x 8.40
700.0	727.3	18.0	702.5	2.5	10.0	WEF507000	715.00 x 8.40
725.0	752.3	18.0	727.5	2.5	10.0	WEF507250	740.00 x 8.40
750.0	777.3	18.0	752.5	2.5	10.0	WEF507500	760.00 x 8.40
775.0	802.0	18.0	777.5	2.5	10.0	WEF507750	786.80 x 8.40
800.0	827.3	18.0	802.5	2.5	10.0	WEF508000	810.00 x 8.40
825.0	852.3	18.0	827.5	2.5	10.0	WEF508250	836.80 x 8.40
850.0	877.3	18.0	852.5	2.5	10.0	WEF508500	865.00 x 8.40
875.0	902.3	18.0	877.5	2.5	10.0	WEF508750	888.00 x 8.40
900.0	927.3	18.0	902.5	2.5	10.0	WEF509000	918.00 x 8.40
925.0	952.3	18.0	927.5	2.5	10.0	WEF509250	936.80 x 8.40
950.0	977.3	18.0	952.5	2.5	10.0	WEF509500	959.10 x 8.40
975.0	1002.3	18.0	977.5	2.5	10.0	WEF509750	990.00 x 8.40
999.9	1027.2	18.0	1002.4	2.5	10.0	WEF509999	1014.00 x 8.40

The rod diameters in **bold** type comply with the recommendations of ISO 3320
*) Installation in grooves according to ISO 6195 Type D
Other dimensions and all intermediate sizes up to 2600 mm diameter including imperial (inch) sizes can be supplied upon request.

Turcon® Excluder® G

Double Acting

Rubber Energized Double-acting Scraper

Material:
Turcon® and Zurcon®

■ Turcon® Excluder® G

The Turcon® Excluder® G is a double-acting scraper with two geometrically different scraper lips, which are positioned back-to-back. The scraper is always installed with 2 O-Rings as elastic energizing elements. The scraper function itself is performed by the Turcon® Excluder® G element. The O-Rings maintains the pressure of the scraper lips against the sliding surface and compensates deflections of the piston rod.

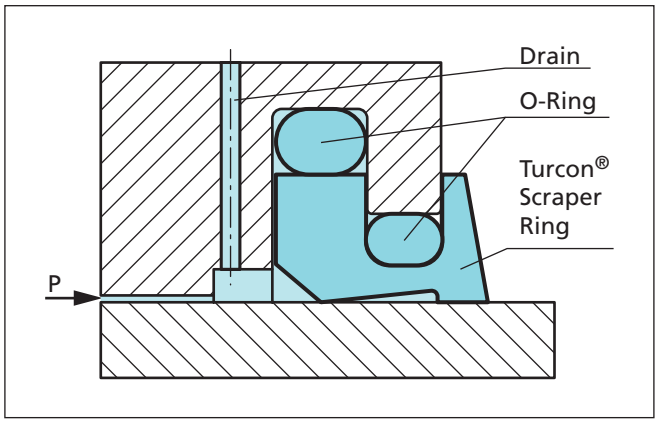

Figure 9 Turcon® Excluder G

Excluder® G has two functions:

- Scrape contaminants from the retracting piston rod and thus to protect the system from soiling
- Hold back the residual fluid film on the extending piston rod on the fluid side.

Excluder® G is preferably used in heavily dirty environments where it is mandatory to prevent dirt from being trapped in front of the scraper element e.g. when the rod is facing upwards, typically for bigger rod diameters in applications like:

- Mining equipment
- Hydraulic presses
- Steelworks
- Heavy construction machinery
- Offshore installations
- Water works

Advantages

In principle the same as for Excluder® 2, 5 and F.

- Outstanding sliding properties
- Stick-slip-free, no sticking (for Turcon® materials)
- Tough scraper (particular in Zurcon® materials)
- Can compensate for deflections of the piston rod or plunger
- Good scraping effect even against firmly adhered dirt, etc.
- Good sealing effect from the inside against the residual fluid film adhering to the surface of the piston rod
- Very high resistance to hydraulic media (Turcon®)
- Available for diameters from 100 up to 2.600 mm (Turcon®), up to 2.200 mm (Zurcon® Z51/Z52).

Disadvantages compared to Excluder® 2, 5 and F

- Require 2 pcs O-Rings in different sizes
- Drain required
- Demanding installation operation
- Only available for diameter above 100 mm

Advantages compared to Excluder® 2, 5 and F

- No dirt trapping because of extended scraping lip

Technical Data

Operating conditions:

Speed:	5 m/s (Turcon®) 2 m/s for Zurcon® Z80 1 m/s for Zurcon® Z51/Z52
Temperature:	-45 °C to +200 °C (Turcon®) -60 °C to +80 °C (Zurcon® Z80) -45 °C to +110 °C (Zurcon® Z51/Z52) (depending on O-Ring material)
Media:	Mineral oil-based hydraulic fluids, flame retardant hydraulic fluids, environmentally safe hydraulic fluids (bio-oils), phosphate ester, water, air and others, depending on scraper ring and O-Ring material compatibility.

Important Note:
The above data are maximum values and cannot be used at the same time. e.g. the maximum operating speed depends on material type, environment, temperature and media.

Installation Instructions

Excluder® G scrapers are always installed in closed grooves - installation dimensions see Table XVI.

First O-Ring 1 is installed in the groove. O-Ring 2 is mounted on the scraper ring before compressed into a kidney-shape and placed in the groove see Figure 10.

Place the Turcon® Excluder® G in compressed form into the groove and push against the Scraper in the direction of the arrow at Figure 10.

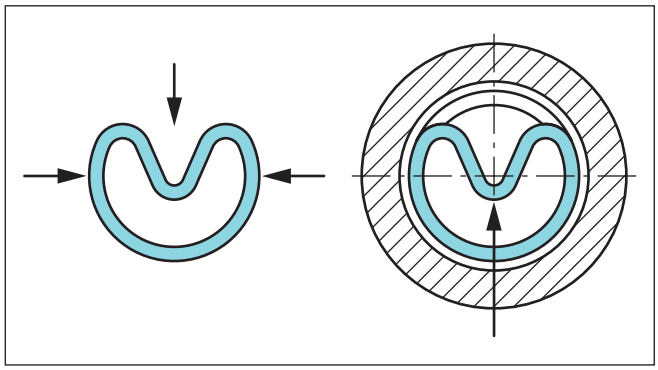

Figure 10 Installation of Turcon® Excluder® G

Materials

The following material combination has proven effective for most applications:

All round material for hydraulic applications with reciprocating, short stroke or helical movements in mineral oils, flame retardant hydraulic fluids HFC, phosphate ester, bio-oils or fluids having less satisfactory lubricating properties:

Turcon® Excluder® G:	Turcon® M12	
O-Ring:	NBR, 70 Shore A	N
	FKM, 70 Shore A	V
Set code:	M12N or M12V	

For medium to heavy applications with reciprocating movements in mineral oils and other media with good lubrication:

Turcon® Excluder® G:	Turcon® T46	
O-Ring:	NBR, 70 Shore A	N
	FKM, 70 Shore A	V
Set code:	T46N or T46V	

For specific applications, all Turcon® materials are available.

Other viable material combinations are listed in Table XV.

Table XV Turcon® and Zurcon® Materials for Excluder® G

Material, Applications, Properties	Code	O–Ring Material Shore A	Code	O-Ring Operating Temp.* °C	Mating Surface Material	Speed m/s max.
Turcon® M12 First material choice for linear motion Overall improved properties For new constructions and updating For all commonly applied hydraulic fluids including fluids with low lubrication performance Lowest friction and best sliding properties Lowest wear on scrapers Improved absorption of abrasive contaminants No wear or abrasion of counter surface Mineral fibre and Additives filled Colour: Dark grey	M12	NBR - 70	N	-30 to +100	Steel Steel, hardened Steel, chrome plated (rod) Cast iron Stainless steel Titanium	5
		NBR - 70 Low temp.	T	-45 to +80		
		FKM - 70	V	-10 to +200		
Turcon® T40 For lubricating and non-lubricating fluids High frequency and short strokes **Water hydraulics** Surface texture is not suitable for gas sealing Carbon fibre filled Colour: Grey	T40	NBR - 70	N	-30 to +100	Steel Steel, chrome plated (rod) Cast iron Stainless steel Aluminium	5
		NBR - 70 Low temp.	T	-45 to +80		
		FKM - 70	V	-10 to +200		
		EPDM-70	E**	-45 to +145		
Turcon® T46 For lubricated hydraulics in linear motion High compressive strength High extrusion resistance Very good sliding and wear properties BAM tested Bronze filled Colour: Light to dark brown, which may have variations in shading	T46	NBR - 70	N	-30 to +100	Steel, hardened Steel, chrome plated (rod) Cast iron	5
		NBR - 70 Low temp.	T	-45 to +80		
		FKM - 70	V	-10 to +200		
Zurcon® Z51*** For mineral oil based fluids Very high abrasion and extrusion resistance For counter surface with rougher surface finish Hard to install Limited chemical resistance Max. working temperature 110 °C Cast polyurethane Colour: Yellow to light-brown	Z51	NBR - 70	N	-30 to +100	Steel Steel, hardened Cast iron Ceramic coating Stainless steel	1
		NBR - 70 Low temp.	T	-45 to +80		

* The O-Ring Operation Temperature is only valid in mineral hydraulic oil, except EPDM. BAM: Tested by "Bundesanstalt Materialprüfung, Germany". ** Material not suitable for mineral oils. *** max. Ø 2200 mm ▭ Highlighted materials are standard.

Material, Applications, Properties	Code	O–Ring Material Shore A	Code	O-Ring Operating Temp.* °C	Mating Surface Material	Speed m/s max.
Zurcon® Z52* **** For mineral oil based fluids High abrasion resistance For counter surface with rougher surface finish Good extrusion resistance Limited chemical resistance Max. working temperature 110 °C Cast polyurethane Colour: Turquoise	Z52	NBR - 70	N	-30 to +100	Steel Steel, hardened Steel, chrome plated (rod) Cast iron Stainless steel Aluminium	1
		NBR - 70 Low temp.	T	-45 to +80		
Zurcon® Z80 For lubricating and non-lubricating fluids Water based fluids, air and gases Dry air pneumatics High abrasion and extrusion resistance For service in abrasive conditions and media with particles Good chemical resistance Limited temperature capability (-60 to +80 °C) UHMWPE (Ultra High Molecular Weight Polyethylene)	Z80	NBR - 70	N	-30 to (+100)	Steel Steel, chrome plated (rod) Stainless steel Aluminium Ceramic coating	2
		NBR - 70 Low temp.	T	-45 to +80		
		EPDM-70	E**	-45 to (+145)		

* The O-Ring Operation Temperature is only valid in mineral hydraulic oil, except EPDM. BAM: Tested by "Bundesanstalt Materialprüfung, Germany". ** Material not suitable for mineral oils. *** max. Ø 2200 mm Highlighted materials are standard.

■ Installation Recommendation

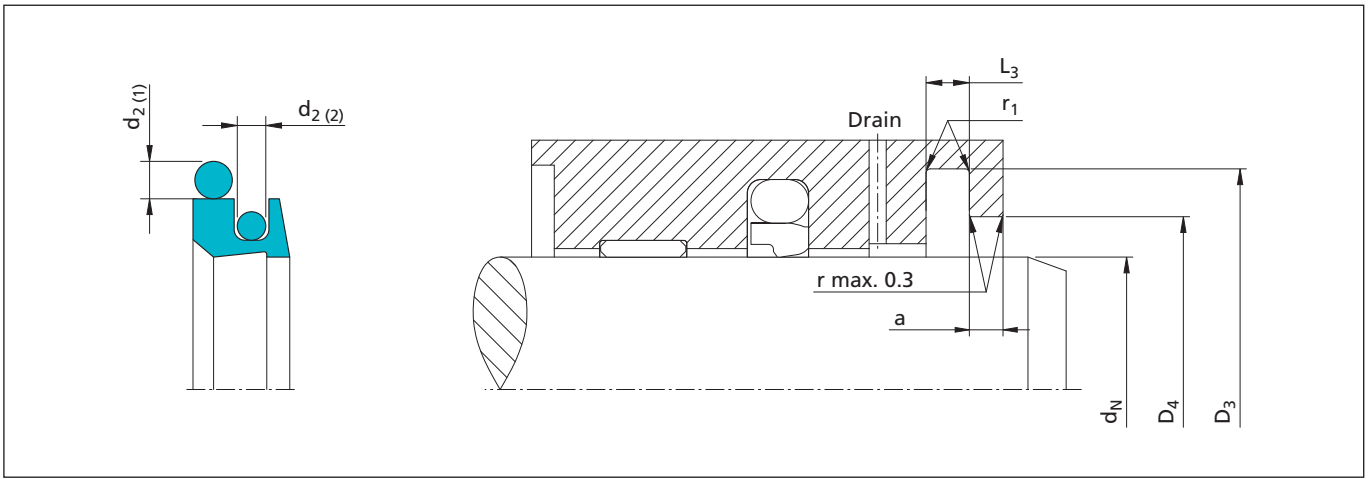

Figure 11 Installation drawing

Table XVI Installation dimensions – Standard recommendations

Series No.	Rod Diameter d_N f8/h9		Groove Diameter	Groove Width	Bore Diameter	Radius	Step Width	O-Ring 1 Cross-Section	O-Ring 2 Cross-Section
	Recommended Range	Available Range	D_3 H8	L_3 +0.2/-0	D_4 H8	r_1	a +0/-0.1	$d_{2(1)}$	$d_{2(2)}$
WEG1	140.0 - 229.9	100.0 - 450.0	d_N + 22.2	6.3	d_N + 10.7	1.2	4.2	5.33	3.53
WEG2	230.0 - 299.9	220.0 - 450.0	d_N + 24.2	6.3	d_N + 10.7	1.2	4.2	5.33	3.53
WEG3	300.0 - 629.9	250.0 - 650.0	d_N + 33.0	8.1	d_N + 15.1	1.2	6.3	7.00	5.33
WEG4	630.0 - 999.9	550.0 - 999.9	d_N + 36.5	9.5	d_N + 15.1	2.0	6.3	8.40	5.33

Sizes above 1000.0 mm are available on special part number.

Table XVII Minimum Installation Diameter

Materials	Zurcon® Z52	Turcon® Materials	Zurcon® Z51 and Z80
Rod diameter (min.)	100 mm	120 mm	140 mm

Table XVIII Calculation of O-Ring ID Diamater

Series No.	O-Ring 1	O-Ring 2
WEG1	(d_N + 12.0) x 5.33	(d_N + 5.0) x 3.53
WEG2	(d_N + 14.0) x 5.33	(d_N + 5.0) x 3.53
WEG3	(d_N + 20.0) x 7.00	(d_N + 6.0) x 5.33
WEG4	(d_N + 21.0) x 8.40	(d_N + 6.0) x 5.33

Ordering example

Turcon® Excluder® G complete with O-Rings in NBR, standard application:

Series: WEG3 (from Table XVI).
Rod diameter: dN = 350.0 mm.
TSS Part No.: WEG303500 (from Table XIX).

Select the material from Table XV.

The corresponding code numbers are appended to the TSS Part No.

Together these form the TSS Article Number.

The TSS Article Number for all intermediate sizes not shown in Table XIX can be determined following the example beside.

TSS Article No. WEG3 0 3500 - M12 N

- Series No. — WEG3
- Type (Standard) — 0
- Rod diameter x 10 — 3500
- Quality Index (Standard) — -
- Material Code (Seal Ring) — M12
- Material Code (O-Ring) — N

Table XIX Installation dimensions / TSS Part No.

Rod Diameter	Groove Diameter	Groove Width	Bore Diameter	Radius	Step Width	TSS Part No.	O-Ring 1 Cross-Section	O-Ring 2 Cross-Section
d_N f8/h9	D_3 H8	L_3 +0/-0.2	D_4 H8	r_1 max.	a +0/-0.1		d_1	d_2
140.0	**162.2**	**6.3**	**150.7**	**1.2**	**4.2**	**WEG101400**	**151.77 x 5.33**	**142.47 x 3.53**
150.0	172.2	6.3	160.7	1.2	4.2	WEG101500	164.47 x 5,33	151.99 x 3.53
160.0	**182.2**	**6.3**	**170.7**	**1.2**	**4.2**	**WEG101600**	**170.82 x 5.33**	**164.69 x 3.53**
170.0	192.2	6.3	180.7	1.2	4.2	WEG101700	183.52 x 5.33	171.04 x 3.53
180.0	**202.2**	**6.3**	**190.7**	**1.2**	**4.2**	**WEG101800**	**189.87 x 5.33**	**183.74 x 3.53**
190.0	212.2	6.3	200.7	1.2	4.2	WEG101900	202.57 x 5.33	190.09 x 3.53
200.0	**222.2**	**6.3**	**210.7**	**1.2**	**4.2**	**WEG102000**	**215.27 x 5.33**	**202.79 x 3.53**
210.0	232.2	6.3	220.7	1.2	4.2	WEG102100	221.62 x 5.33	215.49 x 3.53
220.0	**242.2**	**6.3**	**230.7**	**1.2**	**4.2**	**WEG102200**	**234.32 x 5.33**	**221.84 x 3.53**
230.0	254.2	6.3	240.7	1.2	4.2	WEG202300	247.02 x 5.33	234.54 x 3.53
240.0	264.2	6.3	250.7	1.2	4.2	WEG202400	253.37 x 5.33	247.24 x 3.53
250.0	**274.2**	**6.3**	**260.7**	**1.2**	**4.2**	**WEG202500**	**266.07 x 5.33**	**253.59 x 3.53**
260.0	284.2	6.3	270.7	1.2	4.2	WEG202600	278.77 x 5.33	266.29 x 3.53
270.0	294.2	6.3	280.7	1.2	4.2	WEG202700	278.77 x 5.33	278.99 x 3.53
280.0	**304.2**	**6.3**	**290.7**	**1.2**	**4.2**	**WEG202800**	**291.47 x 5.33**	**291.69 x 3.53**
290.0	314.2	6.3	300.7	1.2	4.2	WEG202900	304.17 x 5.33	291.69 x 3.53
300.0	333.0	8.1	315.1	1.2	6.3	WEG303000	316.87 x 7.00	304.17 x 5.33
310.0	343.0	8.1	325.1	1.2	6.3	WEG303100	329.57 x 7.00	304.17 x 5.33
320.0	**353.0**	**8.1**	**335.1**	**1.2**	**6.3**	**WEG303200**	**342.47 x 7.00**	**329.57 x 5.33**
330.0	363.0	8.1	345.1	1.2	6.3	WEG303300	354.97 x 7.00	329.57 x 5.33
340.0	373.0	8.1	355.1	1.2	6.3	WEG303400	354.97 x 7.00	354.97 x 5.33

The rod diameters in **bold** type comply with the recommendations of ISO 3320.
Other dimensions and all intermediate sizes up to 2600 mm diameter including imperial (inch) sizes can be supplied upon request.

Rod Diameter	Groove Diameter	Groove Width	Bore Diameter	Radius	Step Width	TSS Part No.	O-Ring 1 Cross-Section	O-Ring 2 Cross-Section
d_N f8/h9	D_3 H8	L_3 +0/-0.2	D_4 H8	r_1 max.	a +0/-0.1		d_1	d_2
350.0	383.0	8.1	365.1	1.2	6.3	WEG303500	367.67 x 7.00	354.97 x 5.33
360.0	**393.0**	**8.1**	**375.1**	**1.2**	**6.3**	**WEG303600**	**380.37 x 7.00**	**354.97 x 5.33**
370.0	403.0	8.1	385.1	1.2	6.3	WEG303700	393.07 x 7.00	380.37 x 5.33
380.0	413.0	8.1	395.1	1.2	6.3	WEG303800	405.26 x 7.00	380.37 x 5.33
390.0	423.0	8.1	405.1	1.2	6.3	WEG303900	417.96 x 7.00	405.26 x 5.33
400.0	433.0	8.1	415.1	1.2	6.3	WEG304000	417.96 x 7.00	405.26 x 5.33
410.0	443.0	8.1	425.1	1.2	6.3	WEG304100	430.66 x 7.00	405.26 x 5.33
420.0	453.0	8.1	435.1	1.2	6.3	WEG304200	443.36 x 7.00	430.66 x 5.33
430.0	463.0	8.1	445.1	1.2	6.3	WEG304300	456.06 x 7.00	430.66 x 5.33
440.0	473.0	8.1	455.1	1.2	6.3	WEG304400	468.76 x 7.00	456.06 x 5.33
450.0	483.0	8.1	465.1	1.2	6.3	WEG304500	468.76 x 7.00	456.06 x 5.33
460.0	493.0	8.1	475.1	1.2	6.3	WEG304600	481.46 x 7.00	456.06 x 5.33
470.0	503.0	8.1	485.1	1.2	6.3	WEG304700	494.16 x 7.00	481.38 x 5.33
480.0	513.0	8.1	495.1	1.2	6.3	WEG304800	506.86 x 7.00	481.38 x 5.33
500.0	533.0	8.1	515.1	1.2	6.3	WEG305000	532.26 x 7.00	506.78 x 5.33
520.0	553.0	8.1	535.1	1.2	6.3	WEG305200	532.26 x 7.00	532.18 x 5.33
550.0	583.0	8.1	565.1	1.2	6.3	WEG305500	557.66 x 7.00	557.58 x 5.33
560.0	593.0	8.1	575.1	1.2	6.3	WEG305600	582.68 x 7.00	582.68 x 5.33
580.0	613.0	8.1	595.1	1.2	6.3	WEG305800	608.08 x 7.00	582.68 x 5.33
600.0	633.0	8.1	615.1	1.2	6.3	WEG306000	608.08 x 7.00	608.08 x 5.33
630.0	666.5	9.5	645.1	2.0	6.3	WEG406300	649.00 x 8.40	633.48 x 5.33
640.0	676.5	9.5	655.1	2.0	6.3	WEG406400	661 x 8.40	658.48 x 5.33
650.0	686.5	9.5	665.1	2.0	6.3	WEG406500	671 x 8.40	658.88 x 5.33
660.0	696.5	9.5	675.1	2.0	6.3	WEG406600	680.00 x 8.40	666 x 5.33
670.0	706.5	9.5	685.1	2.0	6.3	WEG406700	691 x 8.40	676 x 5.33
680.0	716.5	9.5	695.1	2.0	6.3	WEG406800	715.00 x 8.40	686 x 5.33
700.0	736.5	9.5	715.1	2.0	6.3	WEG407000	715.00 x 8.40	706 x 5.33
720.0	756.5	9.5	735.1	2.0	6.3	WEG407200	740.00 x 8.40	726 x 5.33
730.0	766.5	9.5	745.1	2.0	6.3	WEG407300	740.00 x 8.40	736 x 5.33
740.0	776.5	9.5	755.1	2.0	6.3	WEG407400	761 x 8.40	746 x 5.33
750.0	786.5	9.5	765.1	2.0	6.3	WEG407500	774.10 x 8.40	756 x 5.33
770.0	806.5	9.5	785.1	2.0	6.3	WEG407700	791 x 8.40	776 x 5.33
780.0	816.5	9.5	795.1	2.0	6.3	WEG407800	810.00 x 8.40	786 x 5.33
800.0	836.5	9.5	815.1	2.0	6.3	WEG408000	810.00 x 8.40	806 x 5.33
810.0	846.5	9.5	825.1	2.0	6.3	WEG408100	831 x 8.40	816 x 5.33
820.0	856.5	9.5	835.1	2.0	6.3	WEG408200	845.00 x 8.40	826 x 5.33
830.0	866.5	9.5	845.1	2.0	6.3	WEG408300	865.00 x 8.40	836 x 5.33

The rod diameters in **bold** type comply with the recommendations of ISO 3320.
Other dimensions and all intermediate sizes up to 2600 mm diameter including imperial (inch) sizes can be supplied upon request.

Rod Diameter	Groove Diameter	Groove Width	Bore Diameter	Radius	Step Width	TSS Part No.	O-Ring 1 Cross-Section	O-Ring 2 Cross-Section
d_N f8/h9	D_3 H8	L_3 +0/-0.2	D_4 H8	r_1 max.	a +0/-0.1		d_1	d_2
850.0	886.5	9.5	865.1	2.0	6.3	WEG408500	888.00 x 8.40	856 x 5.33
890.0	926.5	9.5	905.1	2.0	6.3	WEG408900	911 x 8.40	896 x 5.33
900.0	936.5	9.5	915.1	2.0	6.3	WEG409000	934.10 x 8.40	906 x 5.33
950.0	986.5	9.5	965.1	2.0	6.3	WEG409500	971 x 8.40	956 x 5.33
970.0	1006.5	9.5	985.1	2.0	6.3	WEG409700	991 x 8.40	976 x 5.33

The rod diameters in **bold** type comply with the recommendations of ISO 3320.
Other dimensions and all intermediate sizes up to 2600 mm diameter including imperial (inch) sizes can be supplied upon request.

Scraper DA17

Double Acting

Material:
Rubber

■ Scraper DA 17

Description

The scraper DA 17 is a moulded double-acting elastomer scraper. It has two geometrically different scraper lips.

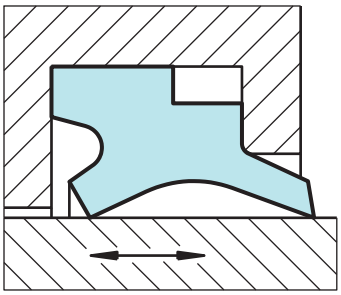

Figure 12 Scraper DA 17

The scraper is preferably used for reciprocating piston rods and plunger pistons in hydraulic cylinders. It prevents the penetration of dirt into the system and on the medium side holds back the residual oil film from the extending piston rod.

The scraper is preferably used in conjunction with our rod seal Turcon® Stepseal®, i.e. seals with a hydrodynamic back-pumping function.

Advantages

- Low friction
- Good scraping effect both inwards and outwards
- Simple, small installation groove
- Compact design
- Easy installation and removal without tools

Technical Data

Speed:	up to 1 m/s
Temperature:	-30 °C to +110 °C
Media:	Mineral oil-based hydraulic fluids, flame retardant hydraulic fluids (HFA, HFB, HFC), water, air, etc.

Important Note:
The above data are maximum values and cannot be used at the same time. e.g. the maximum operating speed depends on material type, pressure, temperature and gap value.
Temperature range also dependent on medium.

Material

Standard material:	NBR, 90 Shore A

■ Installation Recommendation

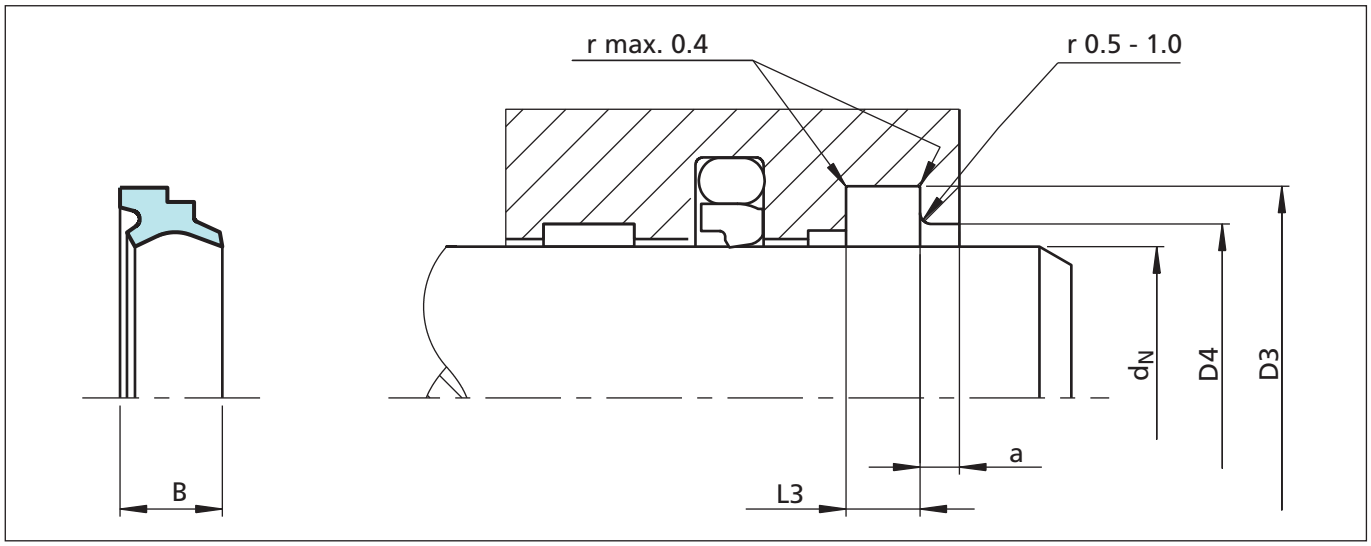

Figure 13 Installation drawing

Ordering Example

Scraper DA 17
Rod diameter: d_N = 50.0 mm
TSS Part No.: WD1700500 (from Table XX)
Material: Standard material
NBR 90 Shore A, Code N9

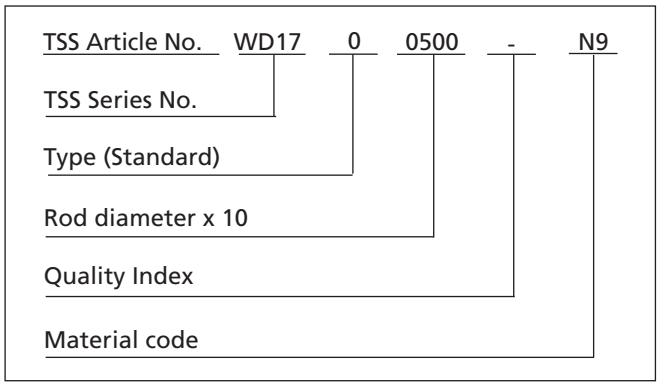

Table XX Installation dimensions / TSS part numbers

Rod Diameter	Groove Diameter	Groove Width	Bore Diameter	Step Width	Width	TSS Part No.
d_N f8/h9	**D3** H9	**L_3** +0.2	**D_4** H11	**a** min.	**B**	
10.0	**18.0**	**6.0**	**13.5**	**2.0**	**8.0**	**WD1700100**
12.0	**20.0**	**6.0**	**15.5**	**2.0**	**8.0**	**WD1700120**
14.0	**22.0**	**6.0**	**17.5**	**2.0**	**8.0**	**WD1700140**
15.0	23.0	6.0	18.5	2.0	8.0	WD1700150
16.0	**24.0**	**6.0**	**19.5**	**2.0**	**8.0**	**WD1700160**
18.0	**26.0**	**6.0**	**21.5**	**2.0**	**8.0**	**WD1700180**

The rod diameters in **bold** type comply with the recommendations of ISO 3320.
Intermediate sizes above 125 mm diameter can also be supplied in impact vulcanised form.
Other dimensions on request. Up to 18 mm diameter we recommend a split groove.

Scraper DA 17

Rod Diameter	Groove Diameter	Groove Width	Bore Diameter	Step Width	Width	TSS Part No.
d_N f8/h9	**D3** H9	L_3 +0.2	D_4 H11	**a** min.	**B**	
20.0	**28.0**	**6.0**	**23.5**	**2.0**	**8.0**	**WD1700200**
22.0	**30.0**	**6.0**	**25.5**	**2.0**	**8.0**	**WD1700220**
24.0	32.0	6.0	27.5	2.0	8.0	WD1700240
25.0	**33.0**	**6.0**	**28.5**	**2.0**	**8.0**	**WD1700250**
28.0	**36.0**	**6.0**	**31.5**	**2.0**	**8.0**	**WD1700280**
30.0	38.0	6.0	33.5	2.0	8.0	WD1700300
32.0	**40.0**	**6.0**	**35.5**	**2.0**	**8.0**	**WD1700320**
35.0	43.0	6.0	38.5	2.0	8.0	WD1700350
36.0	44.0	6.0	39.5	2.0	8.0	WD1700360
37.0	45.0	6.0	40.5	2.0	8.0	WD1700370
38.0	46.0	6.0	41.5	2.0	8.0	WD1700380
40.0	**48.0**	**6.0**	**43.5**	**2.0**	**8.0**	**WD1700400**
42.0	50.0	6.0	45.5	2.0	8.0	WD1700420
45.0	**53.0**	**6.0**	**48.5**	**2.0**	**8.0**	**WD1700450**
46.0	54.0	6.0	49.5	2.0	8.0	WD1700460
48.0	56.0	6.0	51.5	2.0	8.0	WD1700480
50.0	**58.0**	**6.0**	**53.5**	**2.0**	**8.0**	**WD1700500**
52.0	60.0	6.0	55.5	2.0	8.0	WD1700520
55.0	63.0	6.0	58.5	2.0	8.0	WD1700550
56.0	**64.0**	**6.0**	**59.5**	**2.0**	**8.0**	**WD1700560**
60.0	68.0	6.0	63.5	2.0	8.0	WD1700600
63.0	**71.0**	**6.0**	**66.5**	**2.0**	**8.0**	**WD1700630**
65.0	73.0	6.0	68.5	2.0	8.0	WD1700650
68.0	76.0	6.0	71.5	2.0	8.0	WD1700680
70.0	**78.0**	**6.0**	**73.5**	**2.0**	**8.0**	**WD1700700**
75.0	83.0	6.0	78.5	2.0	8.0	WD1700750
80.0	**88.0**	**6.0**	**83.5**	**2.0**	**8.0**	**WD1700800**
85.0	93.0	6.0	88.5	2.0	8.0	WD1700850
90.0	**98.0**	**6.0**	**93.5**	**2.0**	**8.0**	**WD1700900**
95.0	103.0	6.0	98.5	2.0	8.0	WD1700950
100.0	**108.0**	**6.0**	**103.5**	**2.0**	**8.0**	**WD1701000**
105.0	117.0	8.2	110.0	3.0	11.0	WD1701050
110.0	**122.0**	**8.2**	**115.0**	**3.0**	**11.0**	**WD1701100**
115.0	127.0	8.2	120.0	3.0	11.0	WD1701150
120.0	132.0	8.2	125.0	3.0	11.0	WD1701200
125.0	**137.0**	**8.2**	**130.0**	**3.0**	**11.0**	**WD1701250**

The rod diameters in **bold** type comply with the recommendations of ISO 3320.
Intermediate sizes above 125 mm diameter can also be supplied in impact vulcanised form.
Other dimensions on request. Up to 18 mm diameter we recommend a split groove.

Scraper DA 17

Rod Diameter	Groove Diameter	Groove Width	Bore Diameter	Step Width	Width	TSS Part No.
d_N f8/h9	**D3** H9	L_3 +0.2	D_4 H11	**a** min.	**B**	
130.0	142.0	8.2	135.0	3.0	11.0	WD1701300
135.0	147.0	8.2	140.0	3.0	11.0	WD1701350
140.0	**152.0**	**8.2**	**145.0**	**3.0**	**11.0**	**WD1701400**
145.0	157.0	8.2	150.0	3.0	11.0	WD1701450
150.0	162.0	8.2	155.0	3.0	11.0	WD1701500
155.0	167.0	8.2	160.0	3.0	11.0	WD1701550
160.0	**172.0**	**8.2**	**165.0**	**3.0**	**11.0**	**WD1701600**
165.0	177.0	8.2	170.0	3.0	11.0	WD1701650
170.0	182.0	8.2	175.0	3.0	11.0	WD1701700
180.0	**192.0**	**8.2**	**185.0**	**3.0**	**11.0**	**WD1701800**
185.0	197.0	8.2	190.0	3.0	11.0	WD1701850
190.0	202.0	8.2	195.0	3.0	11.0	WD1701900
195.0	207.0	8.2	200.0	3.0	11.0	WD1701950
200.0	**212.0**	8.2	**205.0**	**3.0**	**11.0**	**WD1702000**
205.0	220.0	9.5	212.0	3.0	13.0	WD1702050
210.0	225.0	9.5	217.0	3.0	13.0	WD1702100
220.0	**235.0**	**9.5**	**227.0**	**3.0**	**13.0**	**WD1702200**
225.0	240.0	9.5	232.0	3.0	13.0	WD1702250
240.0	255.0	9.5	247.0	3.0	13.0	WD1702400
250.0	**265.0**	**9.5**	**257.0**	**3.0**	**13.0**	**WD1702500**
260.0	275.0	9.5	267.0	3.0	13.0	WD1702600
275.0	290.0	9.5	282.0	3.0	13.0	WD1702750
280.0	**295.0**	**9.5**	**287.0**	3.0	**13.0**	**WD1702800**
290.0	305.0	9.5	297.0	3.0	13.0	WD1702900
300.0	315.0	9.5	307.0	3.0	13.0	WD1703000
310.0	325.0	9.5	317.0	3.0	13.0	WD1703100
320.0	**335.0**	**9.5**	**327.0**	**3.0**	**13.0**	**WD1703200**
350.0	365.0	9.5	357.0	3.0	13.0	WD1703500
360.0	**375.0**	**9.5**	**367.0**	**3.0**	**13.0**	**WD1703600**
370.0	385.0	9.5	377.0	3.0	13.0	WD1703700
400.0	415.0	9.5	407.0	3.0	13.0	WD1704000
440.0	455.0	9.5	447.0	3.0	13.0	WD1704400

The rod diameters in **bold** type comply with the recommendations of ISO 3320.
Intermediate sizes above 125 mm diameter can also be supplied in impact vulcanised form.
Other dimensions on request. Up to 18 mm diameter we recommend a split groove.

Zurcon® Scraper DA 22

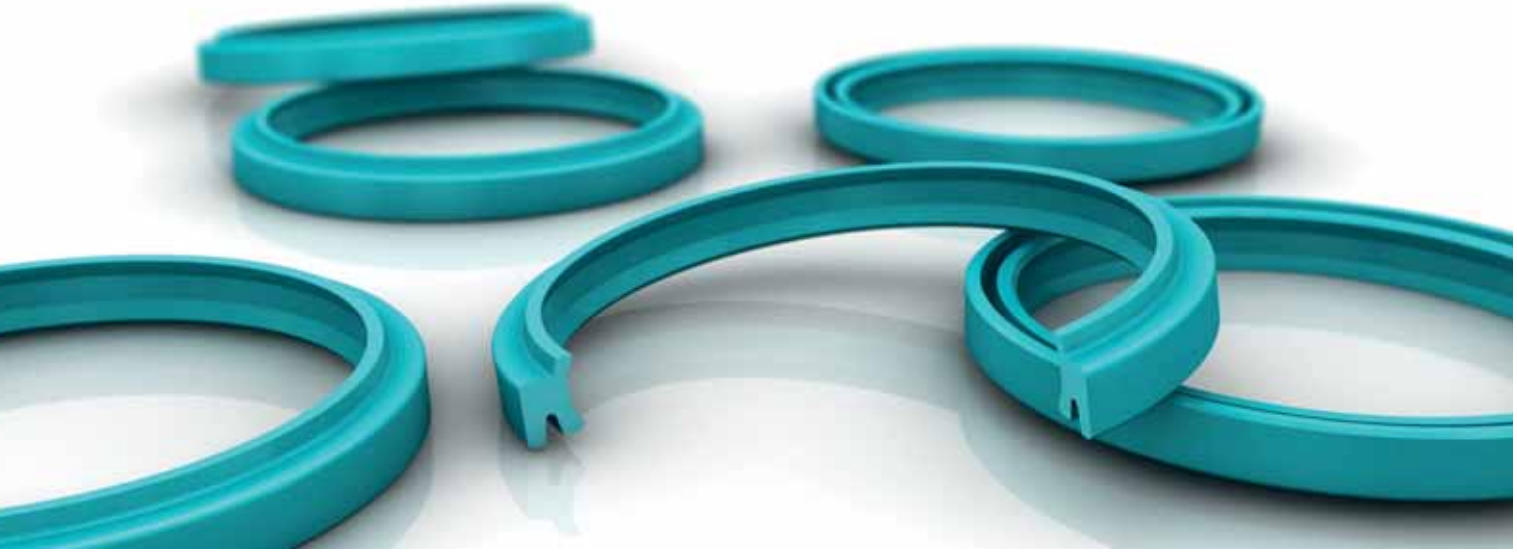

Double Acting

Material:
Zurcon®

■ Scraper DA 22

Description

The scraper is a double-acting polyurethane wiper for closed groove installation. Significant improvements are achieved regarding the profile geometry and material used if compared with conventional elastomeric scrapers.

The scraper lip is designed in a particular way that it reliably scrapes off the dirt but leaves a residual oil film on the rod, which is required for correct operation. The radial squeeze is sufficient to remove particles, dust and water.

The scraping lip facing inwards is designed in a way that it assumes a sealing function even under low pressure. The static seal is achieved by a tight radial fit between the scraper body and the groove.

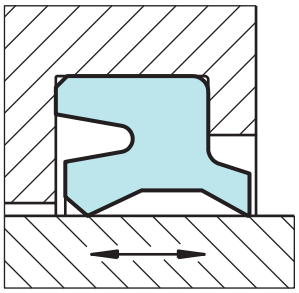

Figure 14 Scraper DA 22

Advantages

- Good scraping effect
- Wear resistant, long service life
- Retaining residual oil film
- Standard elements for standardized installation grooves.

Application Examples

Due to the outstanding wiping capacities, DA22 scraper is recommended wherever there are dusty and humid conditions and especially for the following applications:

- ISO standard cylinders
- Hydraulic industrial cylinders
- Agriculture machinery

Technical Data

Operating conditions

Pressure Scraper side:	Atmospheric pressure
Seal side:	Pressures up to 2 MPa (20 bar) a relief bore must be provided with higher pressures
Speed:	Up to 1 m/s
Temperature:	-35 °C to +100 °C
Media:	Mineral oils and greases
Groove type:	Closed

Important Note:
The above data are maximum values and cannot be used at the same time. e.g. the maximum operating speed depends on material type, pressure, temperature and gap value.
Temperature range also dependent on medium.

Materials

Standard application:

Zurcon® Polyurethane:	92 Shore A
Material code:	Z201
Colour:	turquoise

■ Installation Recommendation

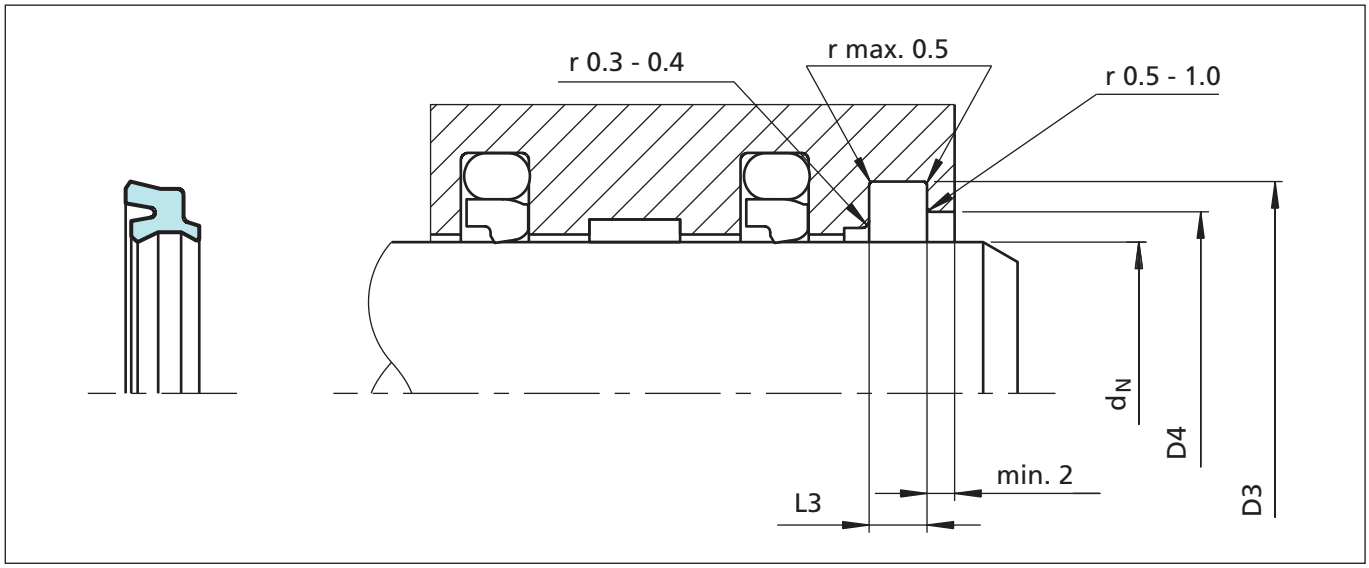

Figure 15 Installation drawing

Ordering Example

Rod diameter: d_N = 36 mm
Groove diameter: D3 = 44 mm (see example 1)
Example 1
TSS Part No.: WD2200360
Material Code: Z201
Old Ref. No.: Not available

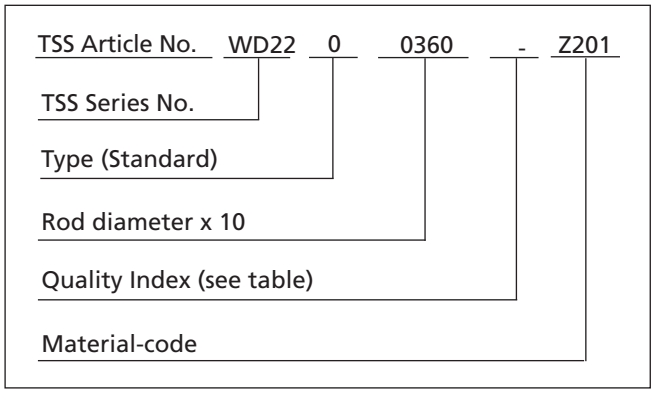

Table XXI Installation dimensions / TSS part numbers

Rod Diameter	Groove Diameter	Groove Width	Bore Diameter	TSS Part No.
d_N f8/h9	**D3** H9	**L_3** +0.1	**D_4** H11	
5.0	10.0	3.5	7.5	WD2200050
8.0	13.0	3.5	10.5	WD2200080
10.0	16.0	4.0	12.5	WD2200100
12.0	**18.0**	**4.0**	**14.5**	**WD2200120**
12.0	18.6	3.8	15.0	WD2210120
14.0	**20.0**	**4.0**	**16.5**	**WD2200140**

The sizes in **bold** type comply with ISO 6195. Installation groove Type C.
Up to 18 mm diameter we recommend a split groove.
Other sizes on request.

Rod Diameter	Groove Diameter	Groove Width	Bore Diameter	TSS Part No.
d_N f8/h9	**D3** H9	L_3 +0.1	D_4 H11	
14.0	20.6	3.8	17.0	WD2210140
16.0	22.0	4.0	18.5	WD2200160
18.0	**24.0**	**4.0**	**20.5**	**WD2200180**
18.0	24.6	3.8	21.0	WD2210180
20.0	26.0	4.0	22.5	WD2200200
20.0	28.6	5.3	23.0	WD2210200
22.0	**28.0**	**4.0**	**24.5**	**WD2200220**
22.0	30.6	5.3	25.0	WD2210220
24.0	32.6	5.3	27.0	WD2210240
25.0	31.0	4.0	27.5	WD2200250
25.0	33.6	5.3	28.0	WD2210250
28.0	**36.0**	**5.0**	**31.0**	**WD2200280**
28.0	36.6	5.3	31.0	WD2210280
30.0	38.0	5.0	33.0	WD2200300
30.0	38.6	5.3	33.0	WD2210300
32.0	40.0	5.0	35.0	WD2200320
32.0	40.6	5.3	35.0	WD2210320
35.0	43.0	5.0	38.0	WD2200350
35.0	43.6	5.3	38.0	WD2210350
36.0	**44.0**	**5.0**	**39.0**	WD2200360
36.0	44.6	5.3	39.0	WD2210360
40.0	48.0	5.0	43.0	WD2200400
40.0	48.6	5.3	43.0	WD2210400
45.0	**53.0**	**5.0**	**48.0**	**WD2200450**
45.0	53.6	5.3	48.0	WD2210450
50.0	58.0	5.0	53.0	WD2200500
50.0	58.6	5.3	53.0	WD2210500
55.0	63.6	5.3	58.0	WD2210550
55.0	65.0	6.0	58.0	WD2200550
56.0	64.6	5.3	59.0	WD2210560
56.0	**66.0**	**6.0**	**59.0**	**WD2200560**
58.0	68.0	6.0	61.0	WD2200580
60.0	68.6	5.3	63.0	WD2210600
60.0	70.0	6.0	63.0	WD2200600
63.0	71.6	5.3	66.0	WD2210630
63.0	73.0	6.0	66.0	WD2200630

The sizes in **bold** type comply with ISO 6195. Installation groove Type C.
Up to 18 mm diameter we recommend a split groove.
Other sizes on request.

Zurcon® Scraper DA 22

Rod Diameter	Groove Diameter	Groove Width	Bore Diameter	TSS Part No.
d_N f8/h9	**D3** H9	L_3 +0.1	D_4 H11	
65.0	73.6	5.3	68.0	WD2210650
65.0	75.0	6.0	68.0	WD2200650
70.0	78.6	5.3	73.0	WD2210700
70.0	**80.0**	**6.0**	**73.0**	**WD2200700**
75.0	83.6	5.3	78.0	WD2210750
75.0	85.0	6.0	78.0	WD2200750
78.0	88.0	6.0	81.0	WD2200780
80.0	88.6	5.3	83.0	WD2210800
80.0	90.0	6.0	83.0	WD2200800
85.0	95.0	6.0	88.0	WD2200850
85.0	97.2	7.1	91.0	WD2210850
90.0	**100.0**	**6.0**	**93.0**	**WD2200900**
90.0	102.2	7.1	96.0	WD2210900
100.0	110.0	6.0	103.0	WD2201000
100.0	112.2	7.1	106.0	WD2211000
110.0	122.2	7.1	116.6	WD2211100
110.0	**125.0**	**8.5**	**114.0**	**WD2201100**
120.0	135.0	8.5	124.0	WD2201200
125.0	140.0	8.5	129.0	WD2201250
140.0	**155.0**	**8.5**	**144.0**	**WD2201400**
150.0	165.0	8.5	154.0	WD2201500
160.0	175.0	8.5	164.0	WD2201600
180.0	195.0	8.5	184.0	WD2201800

The sizes in **bold** type comply with ISO 6195. Installation groove Type C.
Up to 18 mm diameter we recommend a split groove.
Other sizes on request.

Zurcon® Scraper DA 24 & Venting Version

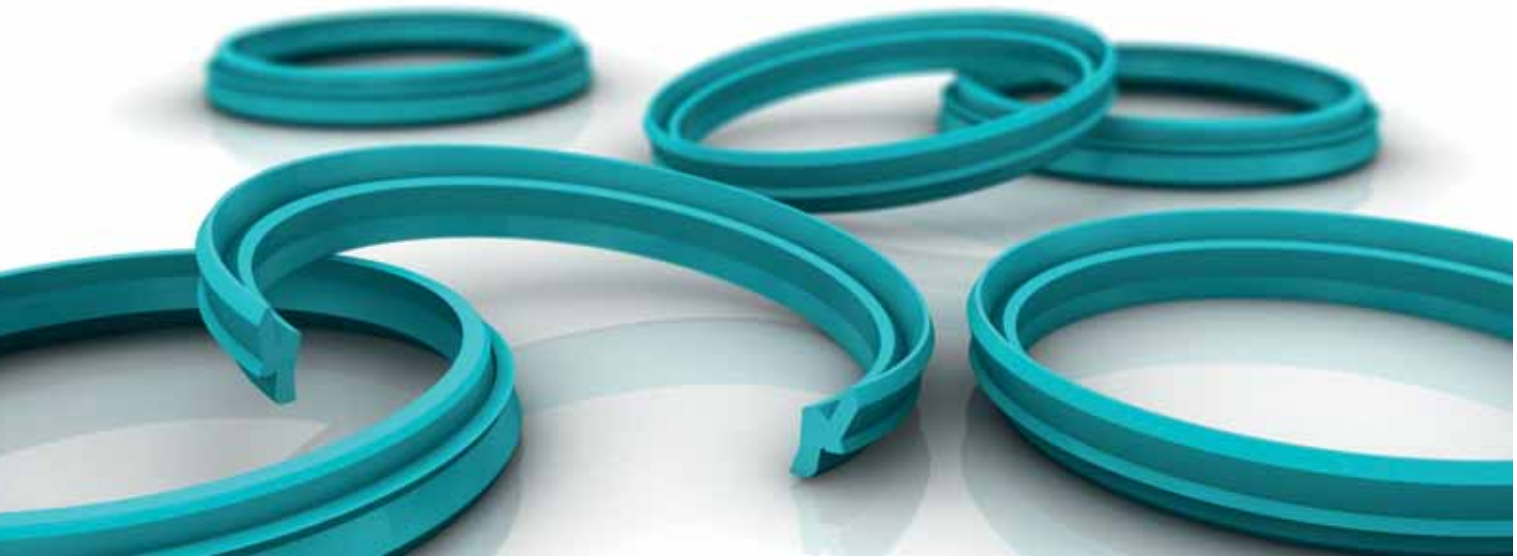

Double Acting

Material:
Zurcon®

■ Zurcon® Scraper DA24

Description

Zurcon® DA24 is a double-acting thermoplastic polyurethane scraper for severe operating conditions and heavy attack of dirt.

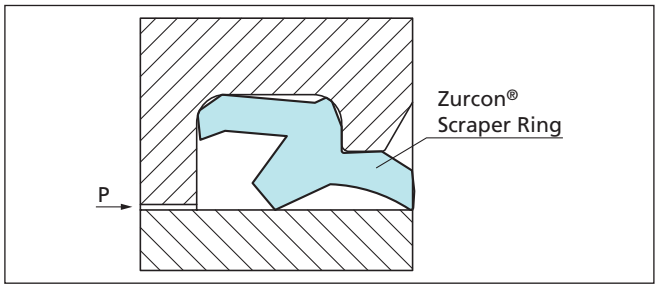

Figure 16 Scraper DA24: Standard Version

A new improved design available now in two different versions has been recently developed by Trelleborg Sealing Solutions to enhance the overall performances.

The special design of the inward-facing sealing lip contributes to an optimum contact pressure resulting in a very high scraper effect of the residual oil film thanks to the sharp, knife cut, scraping lip.

The outer scraper lip leans against the housing. This ensures an optimum sealing force and further it prevents the ingress of dirt and water across the groove bottom. Also in case of high level of external contamination and dirt or rod eccentricity under side load the scraper effect remains stable. The improved design reduces the friction with less heat generated and a longer service life.

The new design of DA24 is now available in two versions: standard and venting.

DA24 is produced in Zurcon®, the Trelleborg Sealing Solutions proprietary thermoplastic polyurethane material specially developed for sealing applications. This provides long service life under harsh working conditions and resistance against installation damage

Advantages

- Very good scraper effect of the outward lip
- Very good sealing effect due to a trimmed inner sealing lip: Provides optimum contact pressure for efficient sealing and wiping of residual oil film.
- Reliable at side steering of the piston rod
- Sturdy and wear-resistant
- Simple installation
- Advanced friction characteristics
- Limited heat generation extending service life
- Stability in the groove securing function
- Robust outer scraper lip supported by a housing recess, it ensures a high contact force on the rod

Venting Version Feature

In some situations when there is pressure build-up behind the scraper, the scraper can be pushed out of the groove causing total sealing system failure.

Zurcon® Scraper DA24 Venting Version has axial holes through the section which operate as pressure relief valves, allowing oil to be released in the case of overpressure.

Once the pressure is build-up the outer lip is temporarily activated through the axial holes and the pressure is released avoiding system failure. With improved stability in the groove the Zurcon® Scraper DA24 Venting Version becomes one of the most efficient scrapers available on the market.

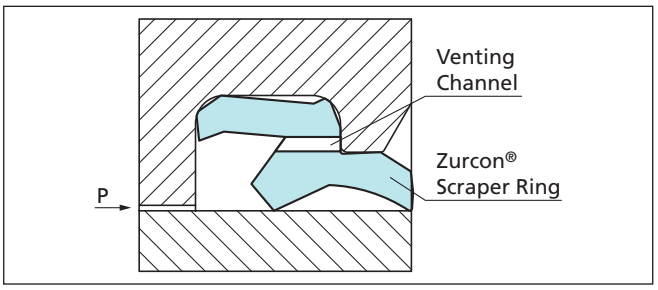

Figure 17 Scraper DA24: Venting Version

Method of operation for Venting version

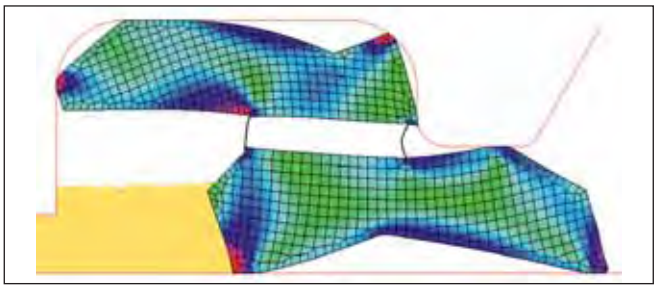

1. Pressurized oil flows through holes in the profile at the top of the scraping lip.

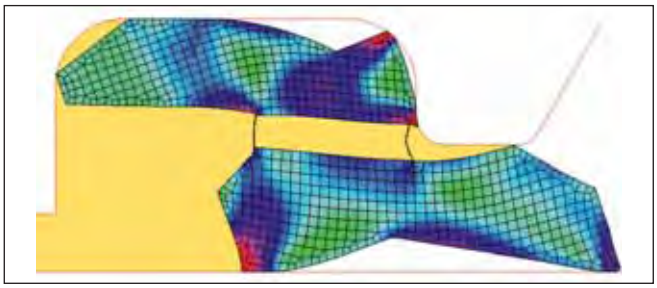

2. The scraping lip is pressed to the rod during pressure build-up.

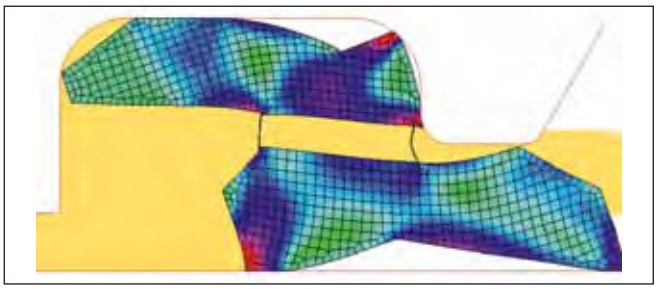

3. A gap opens up between scraping lip and housing at a certain pressure level.

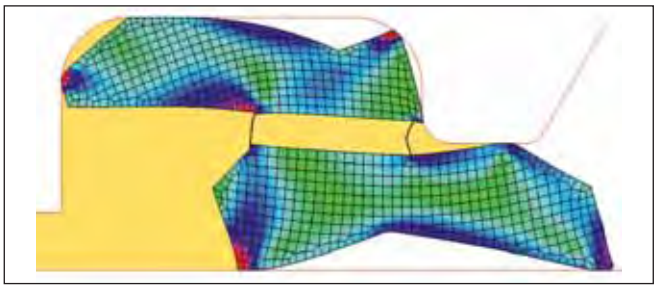

4. The oil is released and pressure is relieved.

Application Examples

The scraper DA24 is especially suitable for application in:

- Construction machinery
- Agriculture- and forestry machinery
- Mobile hydraulic
- High attack of dirt
- Side steering of piston rod

Technical Data

Operating conditions:

Pressure:	standard version:	max. 5 MPa
	venting version:	max. 2 MPa
Velocity:	Up to 0.5 m/s at high strokes and higher speed, please contact your local Trelleborg Sealing Solutions company	
Temperature:	-35 °C to +110 °C	
Media:	Hydraulic fluids based on mineral oil	

Materials - Standard application:

The scraper DA 24 consists of Zurcon® polyurethane material with excellent wear and extrusion resistance and low deformation under load.

Special Polyurethane: Zurcon® Z201 92 Shore A

Set reference: Z201

Colour: turquoise

Premium Materials – Hydrolysis Resistance:

Zurcon® Z24 Premium polyurethane

Set reference: Z24

The Zurcon® polyurethane has high abrasion resistance, a low compression set, high extrusion resistance and a wide temperature range.

Important Note:
The above stated limits for pressure and speed are maximum values individually. Friction heat generated by the combination of pressure and speed may cause local heat built-up. Care should be taken not to apply high values for pressure and speed at the same time.

■ Installation Recommendation

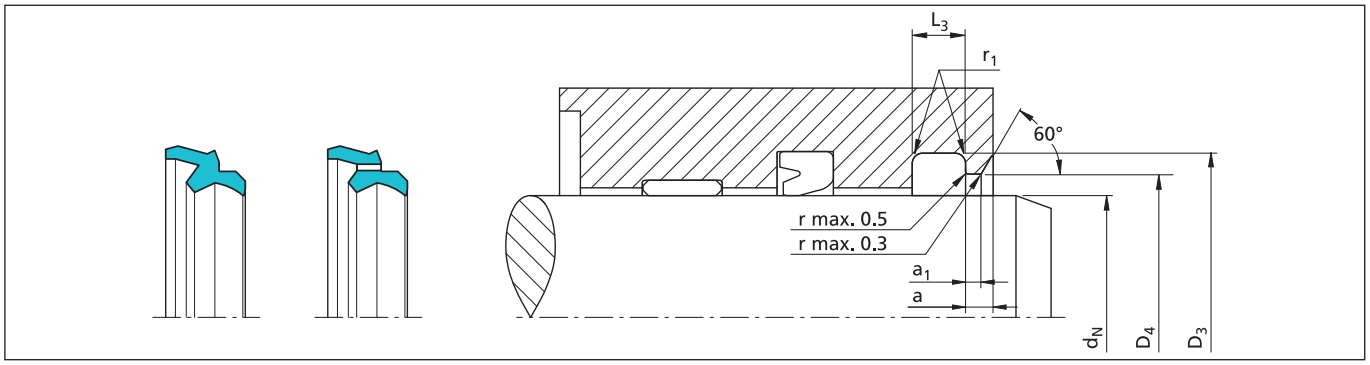

Figure 18 Installation drawing

Table XXII Preferred Series / Order No.

Rod Diameter	Groove Diameter	Groove Width	Radius	Bore Diameter	Step Width	Step Width	TSS Article No. Standard Version
d_N f8/h9	D_3 H9	L_3 +0.15	r_1 max.	D_4 H9	a min.	a_1 min.	
45.0	53.8	6.3	1.2	49.4	3.2	2.0	WD2410450
50.0	58.8	6.3	1.2	54.4	3.2	2.0	WD2410500
56.0	64.8	6.3	1.2	60.4	3.2	2.0	WD2410560
60.0	68.8	6.3	1.2	64.4	3.2	2.0	WD2410600
70.0	82.2	8.1	1.6	76.0	4.0	2.5	WD2410700
75.0	87.2	8.1	1.6	81.0	4.0	2.5	WD2410750
80.0	92.2	8.1	1.6	86.0	4.0	2.5	WD2410800
85.0	97.2	8.1	1.6	91.0	4.0	2.5	WD2410850
90.0	102.2	8.1	1.6	96.0	4.0	2.5	WD2410900
95.0	107.2	8.1	1.6	101.0	4.0	2.5	WD2410950
100.0	112.2	8.1	1.6	106.0	4.0	2.5	WD2411000
105.0	117.2	8.1	1.6	111.0	4.0	2.5	WD2411050
110.0	122.2	8.1	1.6	116.0	4.0	2.5	WD2411100
115.0	127.2	8.1	1.6	121.0	4.0	2.5	WD2411150
125.0	137.2	8.1	1.6	131.0	4.0	2.5	WD2411250
140.0	156.0	9.5	2.0	148.0	5.0	3.0	WD2411400
150.0	166.0	9.5	2.0	158.0	5.0	3.0	WD2411500
160.0	176.0	9.5	2.0	168.0	5.0	3.0	WD2411600
170.0	186.0	9.5	2.0	178.0	5.0	3.0	WD2411700
180.0	196.0	9.5	2.0	188.0	5.0	3.0	WD2411800
200.0	216.0	9.5	2.0	208.0	5.0	3.0	WD2412000
220.0	236.0	9.5	2.0	228.0	5.0	3.0	WD2412200
240.0	256.0	9.5	2.0	248.0	5.0	3.0	WD2412400
260.0	276.0	9.5	2.0	268.0	5.0	3.0	WD2412600
280.0	296.0	9.5	2.0	288.0	5.0	3.0	WD2412800
290.0	306.0	9.5	2.0	298.0	5.0	3.0	WD2412900

Other dimensions on request

Ordering Example

Standard Version:

Rod diameter:	d_N = 50 mm
Groove diameter:	D3 = 58.8 mm
Groove width:	L3 = 6.3 mm
TSS Article No.:	WD2410500
Material:	Standard material Z201

TSS Article No.	WD24	1	0500	-	Z201
TSS Series No.					
Type (Standard)					
Rod diameter x 10					
Quality Index (see table)					
Material-code					

Venting Version:

Rod diameter:	d_N = 140 mm
Groove diameter:	D3 = 156 mm
Groove width:	L3 = 9.5 mm
TSS Article No.:	WD24H1400
Material:	Standard material Z201

TSS Article No.	WD24	H	1400	-	Z201
TSS Series No.					
Type (Venting version)					
Rod diameter x 10					
Quality Index (see table)					
Material-code					

Scraper WRM

Single Acting

Material:
NBR Elastomer

■ Scraper WRM

Description

Scraper rings are essential components of any hydraulic or pneumatic equipment.

These are protection components for axial moving rods: they ensure that foreign matter is not introduced into the system, avoiding costly wear and damage to all the internal components including seals.

WRM scrapers are manufactured in nitrile elastomer with precision machined wiper lip, which produces a very effective wiping action.

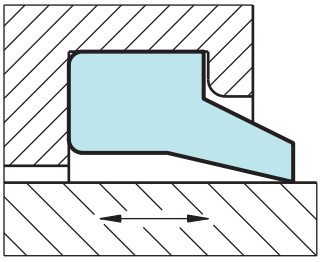

Figure 19 Scraper WRM

Advantages

- Space-saving construction
- Low cost, economical solution
- Simple, easy-construction groove
- Easy installation and removal without tools

Application Examples

Due to their outstanding wiping capacities WRM scrapers are recommended wherever there are dusty and humid conditions and especially for the following applications:

- Valve spindles
- Slide valves
- Hydraulic cylinders
- Agriculture machinery

Technical Data

Operating conditions

Speed:	Up to 1 m/s
Temperature:	-30 °C to +110 °C
Media:	Mineral oil based hydraulic fluids, polyglycol-water emulsions, water-oil emulsions
Groove type:	Closed

Important Note:
The above data are maximum values and cannot be used at the same time. e.g. the maximum operating speed depends on material type, pressure, temperature and gap value.
Temperature range also dependent on medium.

Materials

Standard application:

Nitrile elastomer	NBR 90 Shore A
Material code:	N9T60
Polypac Ref. code:	2790

■ Installation Recommendation

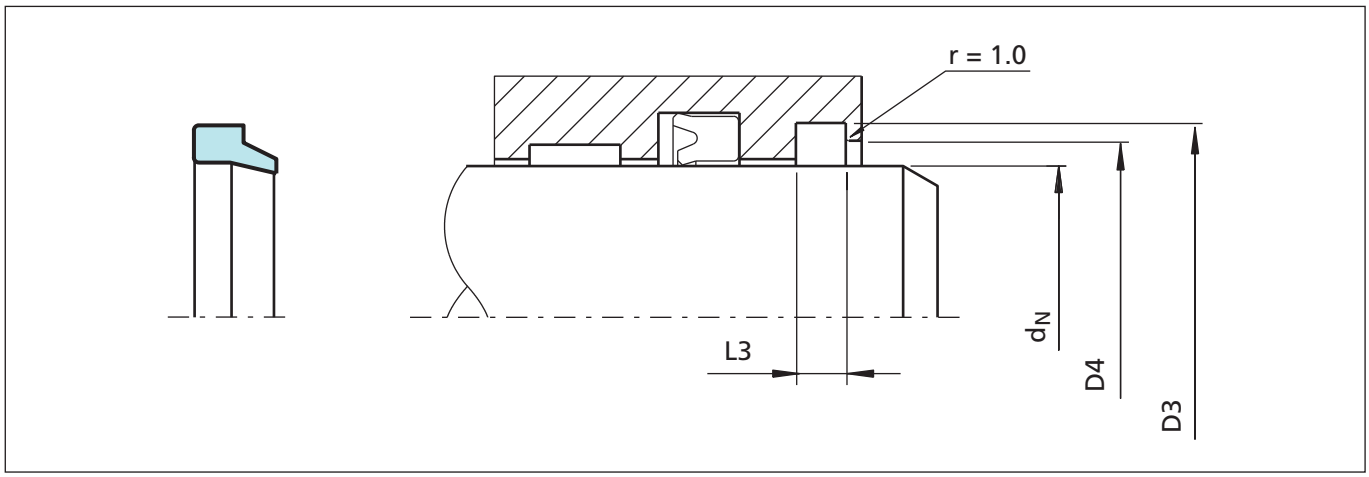

Figure 20 Installaton drawing

Ordering Example

Rod diameter:	d_N = 40 mm
TSS Part No.:	WAP0 0 0400
Material Code:	N9T60 (standard)
Polypac ref.:	WRM 157188

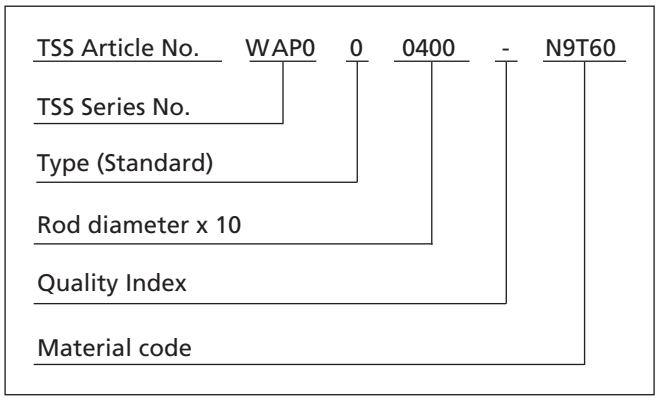

Table XXIII Installation dimensions / TSS part numbers

Rod Diameter	Groove Diameter	Groove Width	Bore Diameter	TSS Part No.	Description
d_N f8/h9	**D_3** H9	**L3** +0.1	**D_4** +0.2		
12.0	18.6	3.8	15.0	WAP000120	WRM047070
13.0	19.6	3.8	16.0	WAP000130	WRM051074
14.0	20.6	3.8	17.0	WAP000140	WRM055078
15.0	21.6	3.8	18.0	WAP000150	WRM059082
16.0	22.6	3.8	19.0	WAP000160	WRM062087
17.0	23.6	3.8	20.0	WAP000170	WRM066094
18.0	24.6	3.8	21.0	WAP000180	WRM070094
19.0	28.6	5.3	22.0	WAP000190	WRM074110
20.0	28.6	5.3	23.0	WAP000200	WRM078110

* Available upon request

Rod Diameter	Groove Diameter	Groove Width	Bore Diameter	TSS Part No.	Description
d_N f8/h9	D_3 H9	L3 +0.1	D_4 +0.2		
22.0	30.6	5.3	25.0	WAP000220	WRM086118
24.0	32.6	5.3	27.0	WAP000240	WRM094125
25.0	31.6	5.3	28.0	WAP100250	WRM098122/S
25.0	33.6	5.3	28.0	WAP000250	WRM098129
26.0	34.6	5.3	29.0	WAP000260	WRM102133
27.0	35.6	5.3	30.0	WAP000270	WRM106137
28.0	36.6	5.3	31.0	WAP000280	WRM110141
30.0	38.6	5.3	33.0	WAP000300	WRM118149
31.0	41.0	6.0	34.0	WAP000310	WRM4544907
32.0	40.6	5.3	35.0	WAP000320	WRM125157
33.0	41.6	5.3	36.0	WAP000330	WRM129161
35.0	43.6	5.3	38.0	WAP000350	WRM137169
36.0	44.6	5.3	39.0	WAP000360	WRM141173
38.0	46.6	5.3	41.0	WAP000380	WRM149181
40.0	48.6	5.3	43.0	WAP000400	WRM157188
42.0	50.6	5.3	45.0	WAP000420	WRM165196
45.0	53.6	5.3	48.0	WAP000450	WRM177208
45.0	55.6	5.3	49.0	WAP100450	WRM177216
46.0	54.6	5.3	49.0	WAP000460	WRM181212
48.0	56.6	5.3	51.0	WAP000480	WRM188220
49.0	57.6	5.3	52.0	WAP000490	WRM193225
50.0	58.6	5.3	53.0	WAP000500	WRM196228
50.0*	60.6	5.3	54.0	WAP100500	WRM196236
50.8	60.9	5.8	55.5	WAP000508	WRM200237
53.0*	61.6	5.3	56.0	WAP000530	WRM208240
55.0*	63.6	5.3	58.0	WAP000550	WRM216248
55.0	65.6	5.3	59.0	WAP100550	WRM216255
56.0	64.6	5.3	59.0	WAP000560	WRM220251
56.0*	66.6	5.3	60.0	WAP100560	WRM220259
60.0	66.6	5.3	63.0	WAP200600	WRM236259
60.0	68.6	5.3	63.0	WAP000600	WRM236267
63.0*	71.6	5.3	66.0	WAP000630	WRM248279
63.0	73.6	5.3	67.0	WAP100630	WRM248287
65.0	73.6	5.3	68.0	WAP000650	WRM255287
65.0	75.6	5.3	69.0	WAP100650	WRM255295
70.0*	76.0	4.3	72.0	WAP000700	WRM275299

* Available upon request

Scraper WRM

Rod Diameter	Groove Diameter	Groove Width	Bore Diameter	TSS Part No.	Description
d_N f8/h9	D_3 H9	L3 +0.1	D_4 +0.2		
70.0	78.6	5.3	73.0	WAP100700	WRM275307
70.0	80.6	5.3	72.0	WAP200700	WRM275314
70.0	82.6	7.1	76.0	WAP300700	WRM275322
72.0	80.6	5.3	75.0	WAP000720	WRM283317
73.0	81.6	5.3	76.0	WAP000730	WRM287318
75.0	83.6	5.3	78.0	WAP000750	WRM295326
75.0	87.2	7.1	81.0	WAP100750	WRM295345
76.5	88.7	7.1	82.5	WAP000765	WRM301348
78.0	92.2	7.1	85.0	WAP000780	WRM307362
80.0	88.6	5.3	83.0	WAP000800	WRM314346
80.0	92.6	7.1	86.0	WAP100800	WRM314362
83.0	91.6	5.3	86.0	WAP000830	WRM326358
84.0	92.0	5.3	87.0	WAP000840	WRM330362
85.0	93.6	5.3	88.0	WAP000850	WRM334366
85.0	97.2	7.1	91.0	WAP100850	WRM334381
88.0	100.2	7.1	94.0	WAP000880	WRM346393
90.0	102.2	7.1	96.0	WAP000900	WRM354401
95.0	107.2	7.1	101.0	WAP000950	WRM374421
97.0	111.0	7.1	104.0	WAP000970	WRM380437
100.0	112.2	7.1	106.0	WAP001000	WRM393440
101.0	111.0	5.3	105.0	WAP001010	WRM397437
103.0	115.2	7.1	109.0	WAP001030	WRM405452
104.0	116.2	7.1	110.0	WAP001040	WRM409457
105.0	117.2	7.1	111.0	WAP001050	WRM413460
110.0	122.2	7.1	116.0	WAP001100	WRM433480
115.0	127.2	7.1	121.0	WAP001150	WRM452500
116.0	128.2	7.1	121.0	WAP001160	WRM456504
116.0	130.2	7.1	123.0	WAP101160	WRM456511
118.0*	130.2	7.1	124.0	WAP001180	WRM464511
120.0	128.6	5.3	123.0	WAP001200	WRM472504
120.0	132.2	7.1	126.0	WAP101200	WRM472519
121.0*	131.0	5.3	125.0	WAP001210	WRM476515
125.0	137.2	7.1	131.0	WAP001250	WRM492539
127.0	135.6	5.3	132.0	WAP001270	WRM500531
127.0	139.2	7.1	133.0	WAP101270	WRM500550
130.0	142.2	7.1	136.0	WAP001300	WRM511559

* Available upon request

Rod Diameter	Groove Diameter	Groove Width	Bore Diameter	TSS Part No.	Description
d_N f8/h9	D_3 H9	L3 +0.1	D_4 +0.2		
135.0	147.2	7.1	141.0	WAP001350	WRM531578
135.0	149.2	7.1	142.0	WAP101350	WRM531582
140.0	152.2	7.1	146.0	WAP001400	WRM551598
140.0	155.2	10.1	147.0	WAP101400	WRM551610
145.0	157.2	7.1	151.0	WAP001450	WRM570618
146.0*	158.0	6.3	152.0	WAP001460	WRM575622/1
146.05	158.25	7.1	152.05	WAP001461	WRM575622
150.0*	162.2	7.1	156.0	WAP001500	WRM590637
155.0	169.2	7.1	162.0	WAP001550	WRM610664
160.0	168.6	5.3	163.0	WAP001600	WRM629661
160.0	175.2	10.1	168.0	WAP101600	WRM629688
165.0	173.6	5.3	168.0	WAP001650	WRM649681
165.0	177.2	7.1	171.0	WAP101650	WRM649698
170.0	180.6	5.3	174.0	WAP001700	WRM669708
170.0	185.2	10.1	178.0	WAP101700	WRM669728
171.0	183.0	6.3	176.0	WAP001710	WRM673720
175.0	189.2	7.1	182.0	WAP001750	WRM688744
180.0	195.2	10.1	188.0	WAP001800	WRM708767
187.0*	195.6	5.3	190.0	WAP001870	WRM736768
196.0	210.2	7.1	203.0	WAP001960	WRM771826
197.0	219.0	6.3	202.0	WAP001970	WRM775823
200.0	215.2	10.1	207.0	WAP002000	WRM787847
210.0	224.2	7.1	217.0	WAP002100	WRM826883
210.0	225.0	7.0	217.0	WAP102100	WRM826885
219.5	233.7	7.1	226.5	WAP002195	WRM860919
223.0	235.0	6.3	228.0	WAP002230	WRM878925
244.5	258.7	7.1	251.5	WAP002445	WRM9621017
249.0	261.0	6.3	254.0	WAP002490	WRM9801027
260.0	275.2	10.1	268.0	WAP002600	WRM10241078

* Available upon request

Zurcon® Scraper ASW

Single Acting

Material:
Zurcon®

■ Scraper ASW

Description

The scraper ASW is a single-acting polyurethane scraper.

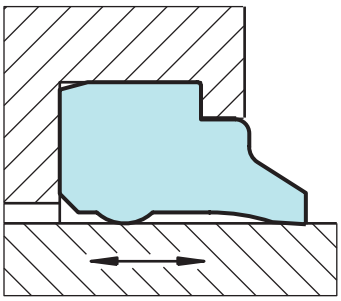

Figure 21 Scraper ASW

The special feature of this scraper is an additional supporting bead on the inner surface. It prevents tilting or twisting of the scraper in the groove. At the same time this support improves the firm seating in the groove, thus preventing the penetration of impurities via the back of the scraper. This represents a technical improvement compared with similar scraper types.

Advantages

- Simple groove design
- Very good scraping effect, wear resistant
- No tilting or twisting in the groove
- Simple installation
- Flush fitting with the outer surface

Technical Data

Speed:	Up to 1 m/s
Temperature:	-35 °C to +100 °C
Media:	Mineral oil-based hydraulic fluids.

Important Note:
The above data are maximum values and cannot be used at the same time. e.g. the maximum operating speed depends on material type, pressure, temperature and gap value.
Temperature range also dependent on medium.

Material

The standard material is a wear resistant Zurcon® polyurethane.

Standard material:	Polyurethane, 92 Shore A Material No. Z201
Colour:	turquoise

■ Installation Recommendation

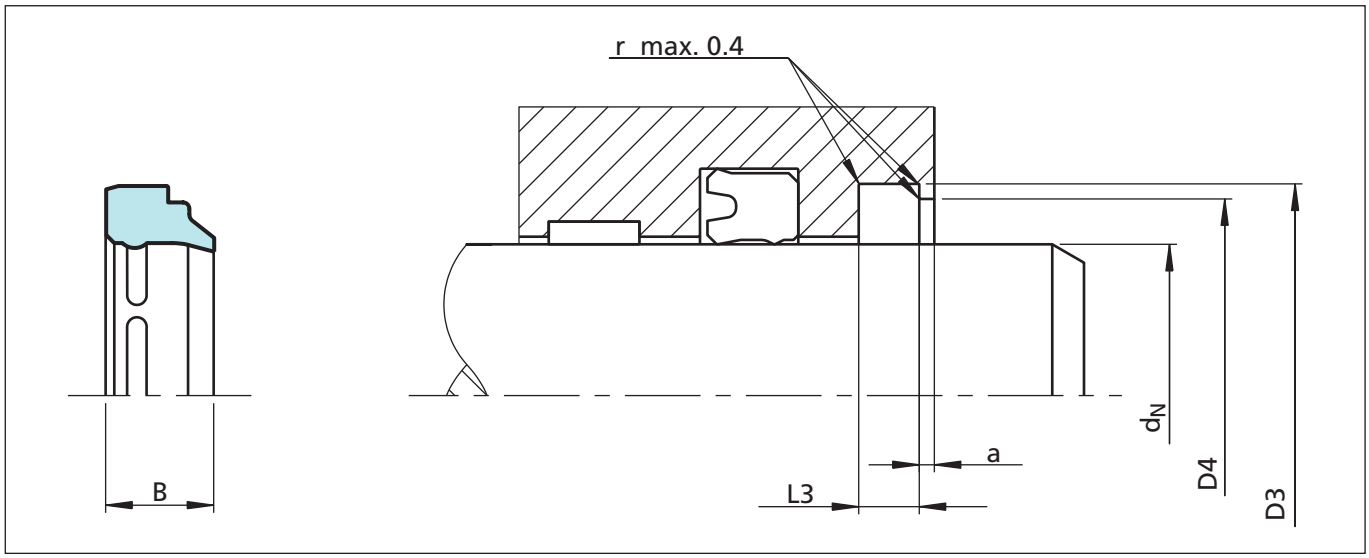

Figure 22 Installation drawing

Ordering Example

Scraper ASW
Rod diameter: d_N = 50.0 mm
TSS Part No.: WSW000500 (from Table XXIV)
Material: Z201

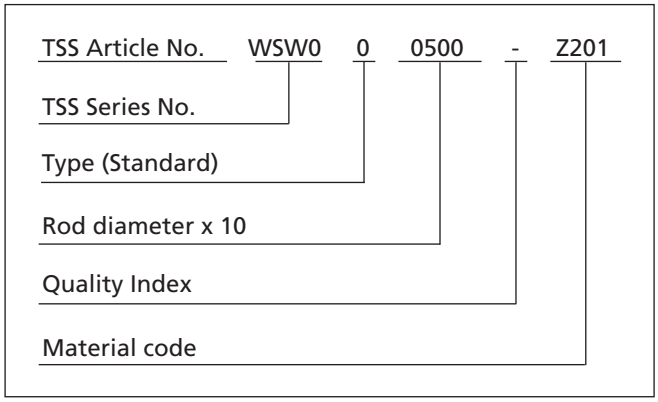

Table XXIV Installation dimensions / TSS part numbers

Rod Diameter	Groove Diameter	Groove Width	Bore Diameter	Step Width	Width	TSS Part No.
d_N f8/h9	D_3 H9	L_3 +0.2	D_4 H11	a min	B	
6.0	**10.0**	**2.0**	**9.0**	**1.0**	**4.0**	**WSW000060**
8.0	**14.0**	**2.6**	**12.0**	**1.0**	**5.0**	**WSW000080**
10.0	**16.0**	**2.6**	**14.0**	**1.0**	**5.0**	**WSW000100**
10.0	**18.0**	**4.0**	**16.0**	**1.0**	**7.0**	**WSW100100**
12.0	**18.0**	**2.6**	**16.0**	**1.0**	**5.0**	**WSW000120**
12.0	**20.0**	**4.0**	**18.0**	**1.0**	**7.0**	**WSW100120**

The rod diameters in **bold** type comply with the recommendations of ISO 3320.
Other dimensions on request. A split groove is required up to 14 mm diameter.

Rod Diameter	Groove Diameter	Groove Width	Bore Diameter	Step Width	Width	TSS Part No.
d_N f8/h9	D_3 H9	L_3 +0.2	D_4 H11	a min	B	
14.0	**20.0**	**2.6**	**18.0**	**1.0**	**5.0**	**WSW000140**
14.0	**22.0**	**4.0**	**20.0**	**1.0**	**7.0**	**WSW100140**
15.0	23.0	4.0	21.0	1.0	7.0	WSW000150
16.0	**24.0**	**4.0**	**22.0**	**1.0**	**7.0**	**WSW000160**
18.0	**26.0**	**4.0**	**24.0**	**1.0**	**7.0**	**WSW000180**
20.0	**26.0**	**2.6**	**24.0**	**1.0**	**5.0**	**WSW100200**
20.0	**28.0**	**4.0**	**26.0**	**1.0**	7.0	**WSW000200**
22.0	**30.0**	**4.0**	**28.0**	**1.0**	7.0	**WSW000220**
24.0	32.0	4.0	30.0	1.0	7.0	WSW000240
25.0	**31.0**	**2.6**	**29.0**	**1.0**	**5.0**	**WSW100250**
25.0	**33.0**	**4.0**	**31.0**	**1.0**	**7.0**	**WSW000250**
28.0	**36.0**	**4.0**	**34.0**	**1.0**	**7.0**	**WSW000280**
30.0	36.0	2.6	34.0	1.0	5.0	WSW100300
30.0	38.0	4.0	36.0	1.0	7.0	WSW000300
32.0	**40.0**	**4.0**	**38.0**	**1.0**	**7.0**	**WSW000320**
34.0	42.0	4.0	40.0	1.0	7.0	WSW000340
35.0	43.0	4.0	41.0	1.0	7.0	WSW000350
36.0	**44.0**	**4.0**	**42.0**	**1.0**	**7.0**	**WSW000360**
38.0	46.0	4.0	44.0	1.0	7.0	WSW000380
40.0	**48.0**	**4.0**	**46.0**	**1.0**	**7.0**	**WSW000400**
42.0	50.0	4.0	48.0	1.0	7.0	WSW000420
45.0	**53.0**	**4.0**	**51.0**	**1.0**	**7.0**	**WSW000450**
50.0	**58.0**	**4.0**	**56.0**	**1.0**	**7.0**	**WSW000500**
52.0	60.0	4.0	58.0	1.0	7.0	WSW000520
55.0	63.0	4.0	61.0	1.0	7.0	WSW000550
56.0	**64.0**	**4.0**	**62.0**	**1.0**	**7.0**	**WSW000560**
60.0	68.0	4.0	66.0	1.0	7.0	WSW000600
63.0	**71.0**	**4.0**	**69.0**	**1.0**	**7.0**	**WSW000630**
65.0	73.0	4.0	71.0	1.0	7.0	WSW000650
70.0	**78.0**	**4.0**	**76.0**	**1.0**	**7.0**	**WSW000700**
75.0	83.0	4.0	81.0	1.0	7.0	WSW000750
80.0	**88.0**	**4.0**	**86.0**	**1.0**	**7.0**	**WSW000800**
85.0	93.0	4.0	91.0	1.0	7.0	WSW000850
90.0	**98.0**	**4.0**	**96.0**	**1.0**	**7.0**	**WSW000900**
100.0	**108.0**	**4.0**	**106.0**	**1.0**	**7.0**	**WSW001000**
105.0	113.0	4.0	111.0	1.0	7.0	WSW001050

The rod diameters in **bold** type comply with the recommendations of ISO 3320.
Other dimensions on request. A split groove is required up to 14 mm diameter.

Zurcon® Scraper ASW

Rod Diameter	Groove Diameter	Groove Width	Bore Diameter	Step Width	Width	TSS Part No.
d_N f8/h9	D_3 H9	L_3 +0.2	D_4 H11	**a** min	**B**	
110.0	**122.0**	**5.5**	**119.0**	**1.5**	**10.0**	**WSW001100**
120.0	132.0	5.5	129.0	1.5	10.0	WSW001200
125.0	**137.0**	**5.5**	**134.0**	**1.5**	**10.0**	**WSW001250**
140.0	**152.0**	**5.5**	**149.0**	**1.5**	**10.0**	**WSW001400**
150.0	162.0	5.5	159.0	1.5	10.0	WSW001500
160.0	**172.0**	**5.5**	**169.0**	**1.5**	**10.0**	**WSW001600**
180.0	**192.0**	**5.5**	**189.0**	**1.5**	**10.0**	**WSW001800**

The rod diameters in **bold** type comply with the recommendations of ISO 3320.
Other dimensions on request. A split groove is required up to 14 mm diameter.

Zurcon® Scraper WNE

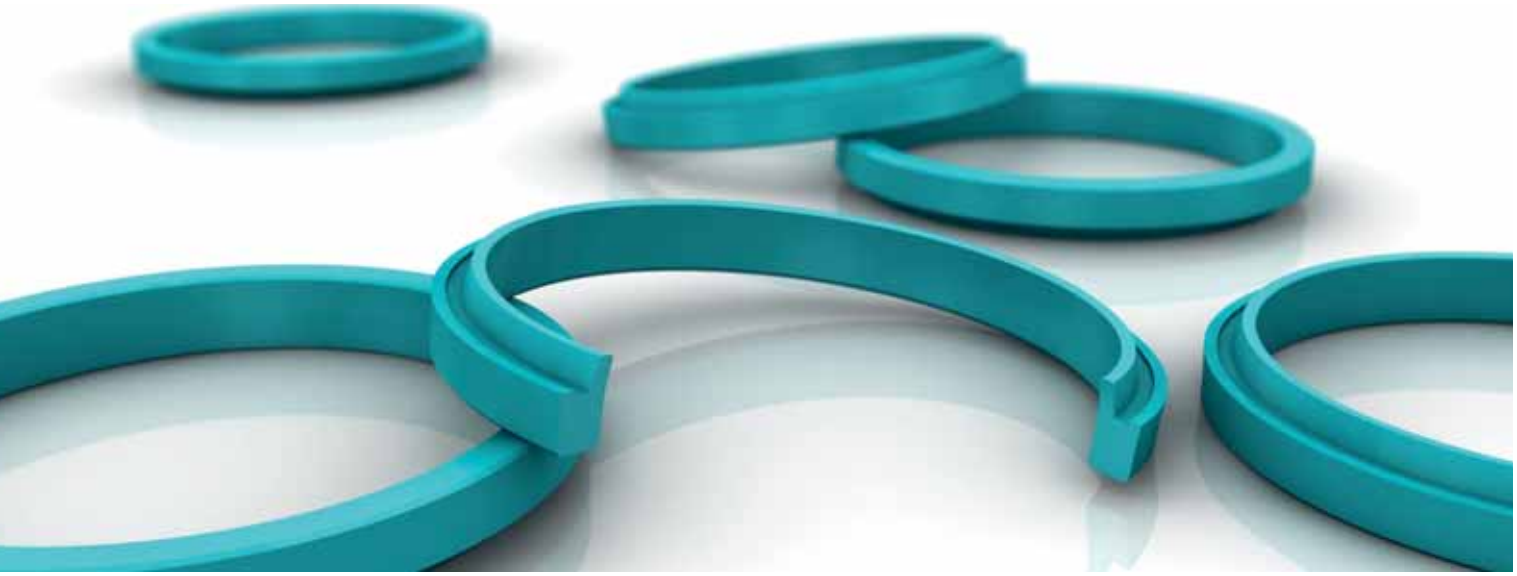

Single Acting

Dynamic + Static Sealing Lip

Material:
Zurcon®

■ Scraper WNE

Description

These scrapers are manufactured in polyurethane. The static sealing lip ensures against the intrusion of dirt and fluids over the outer diameter.

The scraper WNE has an interference to the groove outside diameter.

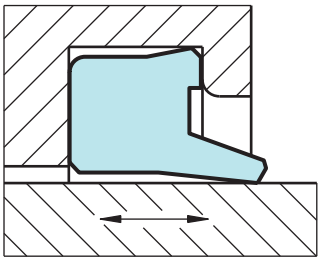

Figure 23 Scraper WNE

Advantages

- High wear resistance
- Good prevention against external fluid intrusion
- Easy installation
- Space-saving construction

Application Examples

These scrapers are recommended wherever there are dusty and humid conditions and especially for the following applications:

- Mobile hydraulic machinery
- Agriculture machinery

Technical Data

Operating conditions

Speed:	Up to 1 m/s
Temperature:	-35 °C to +100 °C
Media:	Mineral oil based hydraulic fluids
Groove type:	Closed

Important Note:
The above data are maximum values and cannot be used at the same time. e.g. the maximum operating speed depends on material type, pressure, temperature and gap value.
Temperature range also dependent on medium.

Materials

Zurcon® Polyurethane:	92 Shore A
Material code:	Z201
Colour:	turquoise

■ Installation Recommendation

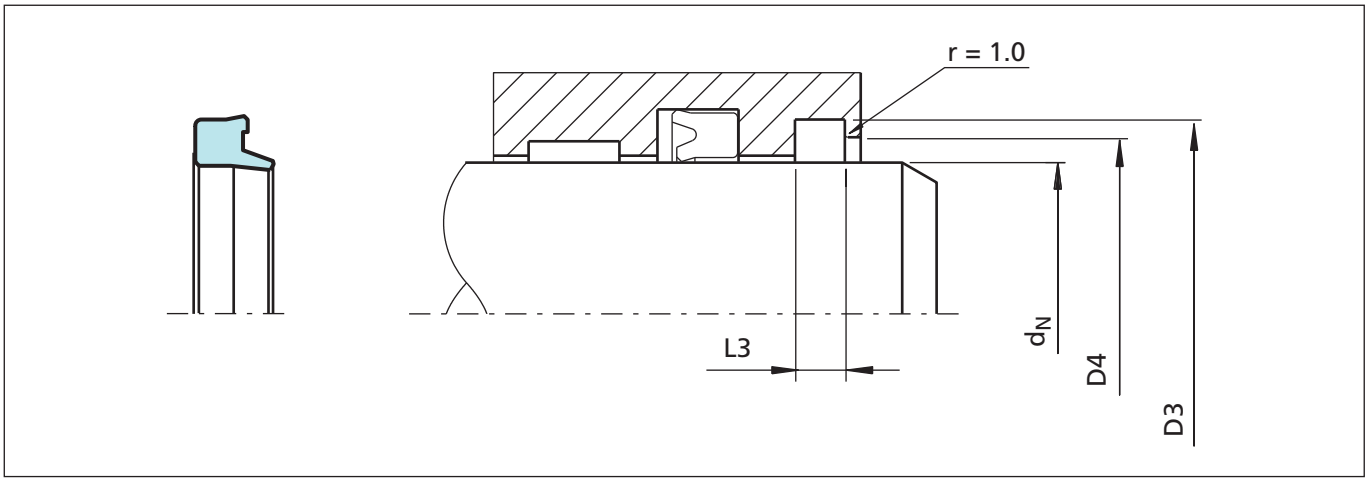

Figure 24 Installation drawing

Ordering Example

For WNE scrapers
Rod diameter: d_N = 45 mm
Groove diameter: D3 = 53.6 mm
TSS Part No.: WNE000450
Material code: Z201

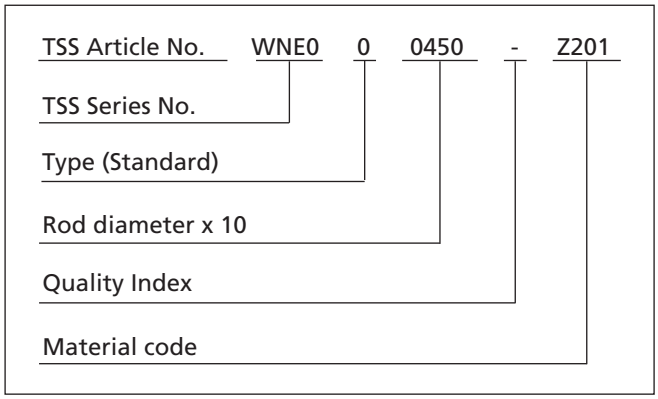

Table XXV Installation dimensions / TSS part numbers

Rod Diameter	Groove Diameter	Groove Width	Bore Diameter	TSS Part No.
d_N h9	D_3 H11	L_3 +0.1	D_4 +0.2	
8.0	14.6	3.8	11.0	WNE000080
10.0	16.6	3.8	13.0	WNE000100
12.0	18.6	3.8	15.0	WNE000120
14.0	20.6	3.8	17.0	WNE000140
15.0	21.6	3.8	18.0	WNE000150
16.0	22.6	3.8	19.0	WNE000160
18.0	24.6	3.8	21.0	WNE000180
20.0	28.6	5.3	23.0	WNE000200
22.0	30.6	5.3	25.0	WNE000220
24.0	32.6	5.3	27.0	WNE000240
25.0	33.6	5.3	28.0	WNE000250
28.0	36.6	5.3	31.0	WNE000280

Rod Diameter	Groove Diameter	Groove Width	Bore Diameter	TSS Part No.
d_N h9	D_3 H11	L_3 +0.1	D_4 +0.2	
30.0	38.0	5.3	33.0	WNE000300
30.0	38.6	5.3	33.0	WNE100300
32.0	40.6	5.3	35.0	WNE000320
35.0	43.0	5.3	38.0	WNE000350
35.0	43.6	5.3	38.0	WNE100350
36.0	44.6	5.3	39.0	WNE000360
38.0	46.6	5.3	41.0	WNE000380
40.0	48.6	5.3	43.0	WNE000400
45.0	53.6	5.3	48.0	WNE000450
46.0	54.6	5.3	49.0	WNE000460
50.0	58.0	5.3	53.0	WNE000500
50.0	58.6	5.3	53.0	WNE100500
55.0	63.6	5.3	58.0	WNE000550
56.0	64.6	5.3	59.0	WNE000560
60.0	68.6	5.3	63.0	WNE200600
61.0	69.6	5.3	64.0	WNE000610
63.0	71.6	5.3	66.0	WNE000630
65.0	73.6	5.3	68.0	WNE000650
70.0	78.6	5.3	73.0	WNE100700
75.0	83.6	5.3	78.0	WNE000750
80.0	88.6	5.3	83.0	WNE000800
85.0	97.2	7.1	91.0	WNE000850
90.0	102.2	7.1	96.0	WNE000900
95.0	107.2	7.1	101.0	WNE000950
100.0	112.2	7.1	106.0	WNE101000
110.0	122.2	7.1	116.0	WNE001100
120.0	132.0	7.1	126.0	WNE001200
125.0	137.2	7.1	131.0	WNE001250
135.0	147.2	7.1	141.0	WNE001350
140.0	152.2	7.1	146.0	WNE001400
160.0	175.2	10.1	168.0	WNE101600
180.0	195.2	10.1	188.0	WNE001800
200.0	215.2	10.1	208.0	WNE002000

Zurcon® Scraper WNV

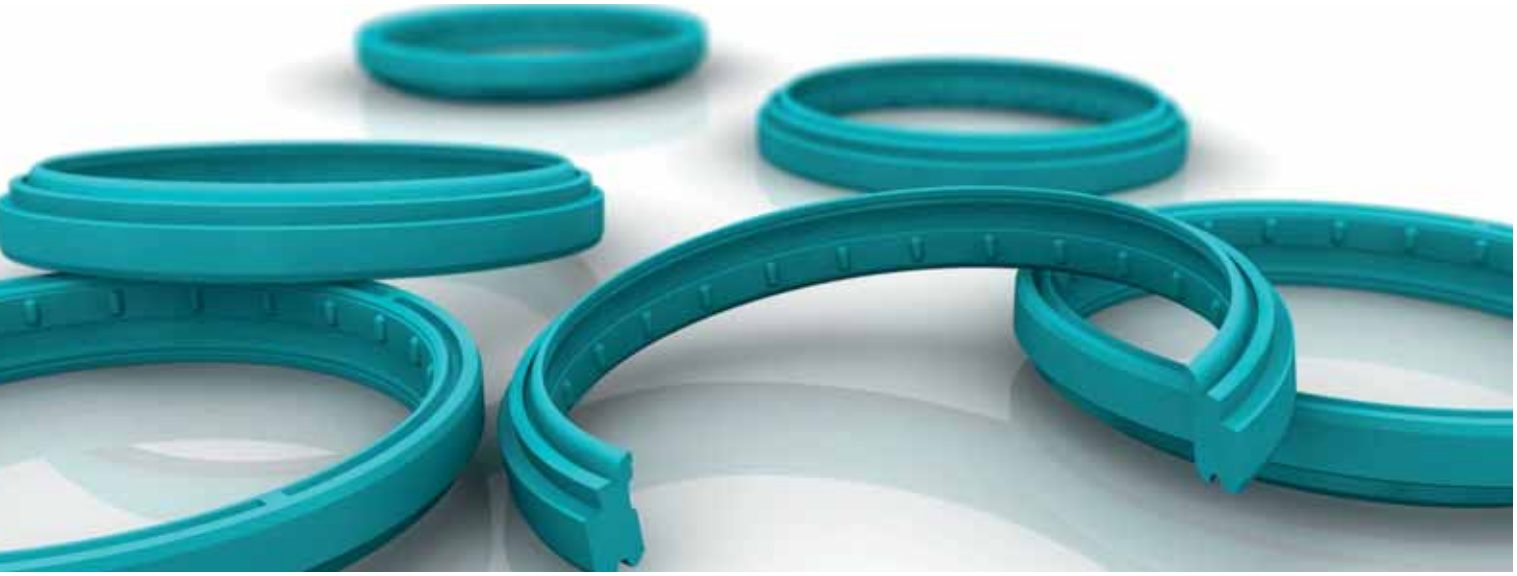

Double Acting

Material:
Zurcon®

■ Scraper WNV

Description

WNV is a double acting scraper in material Zurcon® polyurethane Z 201. The dynamic scraping lip is specially designed with an additional inwards sealing edge to keep the residual oil film in the system. If the volume of this oil film can not be backpumped by the main rod seal (e.g. u.cup) a pressure built up between u-cup and scraper will be prevented by releasing this pressure by liftening of the scraper lip.

The static sealing lip and edge respectively ensure against the intrusion of dirt and fluids (e.g. water) over the outer diameter of the scraper.The support on the reverse side of the scraper prevents it from twisting in the groove.

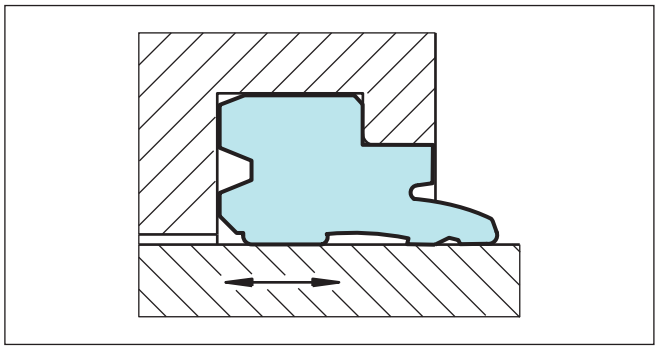

Figure 25 Scraper WNV

Advantages

- Double acting
- Pressure release function
- Good static sealing performance due to additional seal lip at the housing
- Stable position of scraper in the housing
- Support bead with notches to support release function
- Housings in accordance to ISO 6195 type A

Application Examples

- Mobile hydraulic machinery
- ISO-standard cylinders application
- Agriculture machinery
- Lift trucks
- Cargo tailboards
- Steering cylinders

Technical Data

Speed:	Up to 1 m/s
Temperature:	-35 °C to +100 °C
Media:	Mineral oil based hydraulic fluids
Groove type:	Closed

Important Note:
The above data are maximum values and cannot be used at the same time. e.g. the maximum operating speed depends on material type, pressure, temperature and gap value.
Temperature range also dependent on medium.

Materials

Standard application:

Zurcon® Polyurethane:	92 Shore A
Material code:	Z201
Colour:	turquoise

■ Installation Recommendation

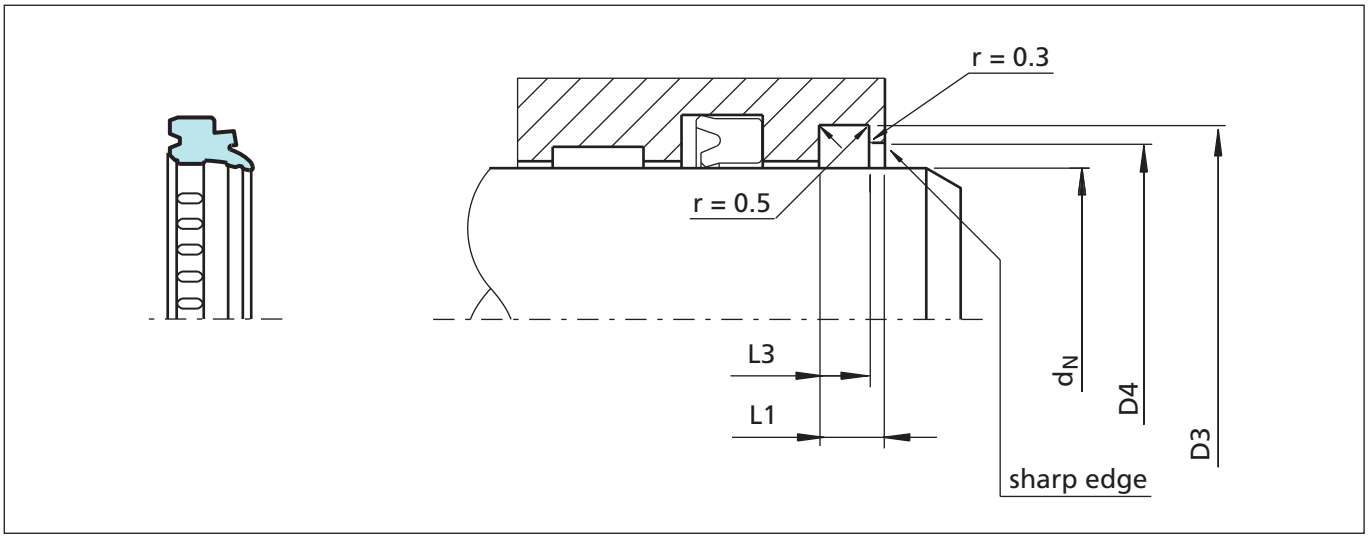

Figure 26 Installation drawing

Ordering Example

Rod diameter: d_N = 45.0 mm
Groove diameter: D_3 = 53.0 mm
TSS Part No.: WNV000450 (from Table XXVI)
Material code: Z201

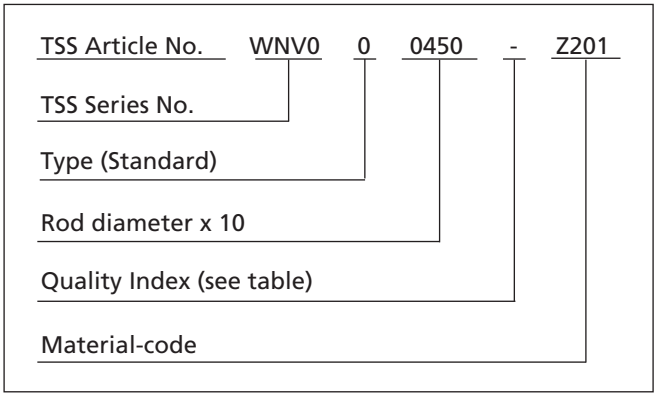

Table XXVI Installation dimensions / TSS part numbers

Rod Diameter	Groove Diameter	Bore Diameter	Groove Width	Depth	TSS Part No.
d_N h9	**D_3** H8	**D_4** H8	**L_3** +0.2	**L_1** +0.2	
16	24	21.5	5.0	7.0	WNV000160
18	26	23.5	5.0	7.0	WNV000180
20	28	25.5	5.0	7.0	WNV000200
25	33	30.5	5.0	7.0	WNV000250
30	38	35.5	5.0	7.0	WNV000300
32	40	37.5	5.0	7.0	WNV000320
35	43	40.5	5.0	7.0	WNV000350
40	48	45.5	5.0	7.0	WNV000400
45	53	50.5	5.0	7.0	WNV000450
50	58	55.5	5.0	7.0	WNV000500
60	68	65.5	5.0	7.0	WNV100600
70	80	77	6.3	8.3	WNV000700

The rod diameters in **bold** type comply with the recommendations of ISO 6195 Type A installation dimensions

Rod Diameter	Groove Diameter	Bore Diameter	Groove Width	Depth	TSS Part No.
d_N h9	**D_3** H8	**D_4** H8	**L_3** +0.2	**L_1** +0.2	
80	90	87	6.3	8.3	WNV000800
100	115	110	9.5	12	WNV001000

The rod diameters in **bold** type comply with the recommendations of ISO 6195 Type A installation dimensions

Scraper WSA

Single Acting

With Metal Case

For open Groove Assembly

Material:
NBR and Metal

■ Scraper WSA

Description

The scraper WSA is a mould-vulcanised single-acting elastomer scraper, with integral metal reinforcement for open groove assembly. In conjunction with the scraper oversize, an exact fit is obtained in the housing.

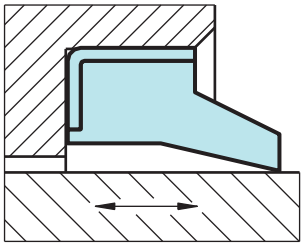

Figure 27 Scraper WSA

Advantages

- Space-saving construction
- Low cost, economical solution
- Simple, easy-construction groove
- Firm fit in the groove due to metallic press fit

Application Examples

- Hydraulic cylinders
- Agriculture machinery
- Construction machinery
- Lift trucks
- Mobile hydraulic

Technical Data

Operating conditions

Speed:	Up to 1 m/s
Temperature:	-30 °C to +110 °C
Media:	Mineral oil based hydraulic fluids. polyglycol-water emulsions, water-oil emulsions
Groove type:	Open

Important Note:
The above data are maximum values and cannot be used at the same time. e.g. the maximum operating speed depends on material type, pressure, temperature and gap value.
Temperature range also dependent on medium.

Materials

Standard application:

Material:	NBR 90 Shore A + Metal
TSS code:	N9MN

■ Installation Recommendation

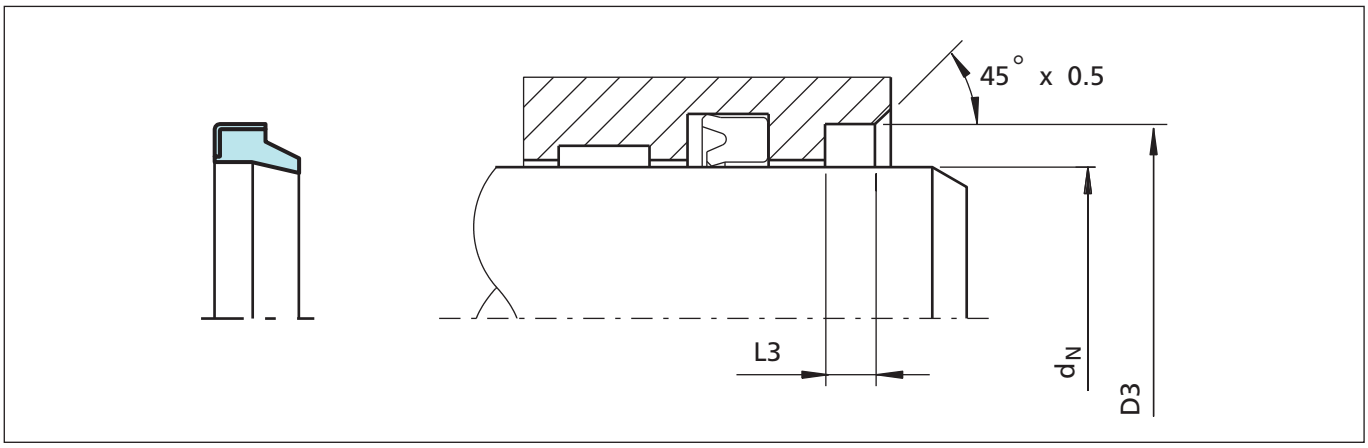

Figure 28 Installation drawing

Ordering Example

Rod diameter: d_N = 35 mm
Groove diameter: D3 = 45 mm
TSS Part No.: WSA000350

Material set code:
TSS: N9MN

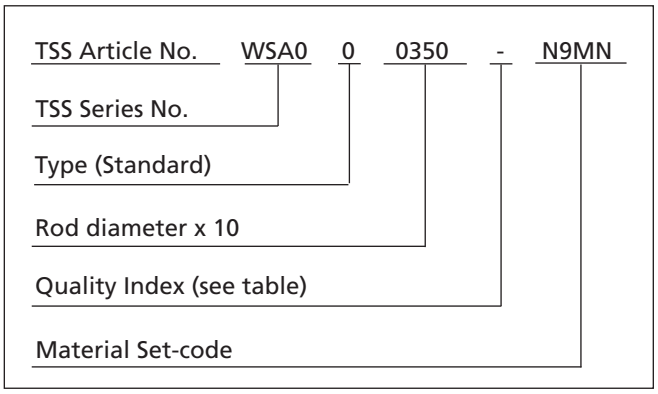

Table XXVII Installation dimensions / TSS part numbers

Rod Diameter	Groove Diameter	Groove Width	TSS Part No.
d_N h9	D_3 H8	L_3 +0.1	
6.0	13.0	3.0	WSA000060
8.0	15.0	3.0	WSA000080
10.0	16.0	3.0	WSA000100
10.0	**18.0**	**5.0**	WSA100100
12.0	18.0	5.0	WSA200120
12.0	20.0	4.0	WSA000120
12.0	22.0	5.0	WSA100120
13.0	18.0	3.0	WSA000130
14.0	20.0	4.0	WSA100140

The sizes in **bold** type comply with ISO 6195. installation groove Type B. Other sizes on request.
The listed products are technically equivalent but availability and pricing may vary.

Rod Diameter	Groove Diameter	Groove Width	TSS Part No.
d_N h9	D_3 H8	L_3 +0.1	
14.0	22.0	3.0	WSA000140
16.0	22.0	4.0	WSA000160
16.0	26.0	5.0	WSA200160
16.0	28.0	5.0	WSA300160
18.0	26.0	5.0	WSA000180
18.0	28.0	5.0	WSA300180
18.0	**28.0**	**7.0**	WSA100180
20.0	26.0	4.0	WSA000200
20.0	28.0	3.5	WSA200200
20.0	28.0	5.0	WSA300200
20.0	30.0	4.0	WSA400200
20.0	30.0	5.0	WSA500200
20.0	**30.0**	**7.0**	WSA600200
22.0	28.0	5.0	WSA000220
22.0	32.0	5.0	WSA200220
22.0	**32.0**	**7.0**	WSA100220
24.0	35.0	5.0	WSA000240
25.0	36.5	5.0	WSA200250
25.0	35.0	5.0	WSA000250
25.0	**35.0**	**7.0**	WSA100250
28.0	38.0	5.0	WSA000280
28.0	40.0	7.0	WSA100280
30.0	40.0	5.0	WSA000300
30.0	40.0	7.0	WSA100300
30.0	45.0	5.0	WSA200300
32.0	42.0	5.0	WSA000320
32.0	42.0	7.0	WSA400320
32.0	44.0	4.0	WSA300320
32.0	45.0	4.0	WSA100320
32.0	45.0	7.0	WSA200320
35.0	45.0	7.0	WSA000350
36.0	45.0	7.0	WSA000360
38.0	48.0	7.0	WSA000380
40.0	50.0	5.0	WSA100400
40.0	50.0	5.0	WSA000400
40.0	**50.0**	**7.0**	WSA200400

The sizes in **bold** type comply with ISO 6195. installation groove Type B. Other sizes on request.
The listed products are technically equivalent but availability and pricing may vary.

Scraper WSA

Rod Diameter	Groove Diameter	Groove Width	TSS Part No.
d_N h9	D_3 H8	L_3 +0.1	
42.0	52.0	7.0	WSA000420
45.0	55.0	5.0	WSA100450
45.0	**55.0**	**7.0**	WSA000450
50.0	56.0	5.0	WSA000500
50.0	60.0	5.0	WSA200500
50.0	60.0	5.0	WSA500500
50.0	**60.0**	**7.0**	WSA300500
50.0	65.0	7.0	WSA400500
52.0	62.0	7.0	WSA000520
55.0	63.0	7.0	WSA000550
55.0	65.0	5.0	WSA200550
55.0	65.0	7.0	WSA100550
55.0	70.0	7.0	WSA300550
56.0	**66.0**	**7.0**	WSA000560
60.0	70.0	5.0	WSA200600
60.0	70.0	7.0	WSA000600
60.0	74.0	5.0	WSA100600
63.0	75.0	7.0	WSA000630
65.0	75.0	5.0	WSA100650
65.0	75.0	7.0	WSA000650
70.0	80.0	5.0	WSA100700
70.0	**80.0**	**7.0**	WSA000700
75.0	83.0	7.0	WSA100750
75.0	85.0	7.0	WSA000750
80.0	88.0	7.0	WSA100800
80.0	**90.0**	**7.0**	WSA000800
85.0	95.0	7.0	WSA000850
90.0	**100.0**	**7.0**	WSA000900
95.0	105.0	7.0	WSA000950
100.0	110.0	7.0	WSA001000
105.0	115.0	7.0	WSA001050
110.0	120.0	7.0	WSA001100
115.0	125.0	7.0	WSA001150
120.0	130.0	7.0	WSA001200
120.0	135.0	7.0	WSA101200
125.0	**140.0**	**9.0**	WSA001250

The sizes in **bold** type comply with ISO 6195. installation groove Type B. Other sizes on request.
The listed products are technically equivalent but availability and pricing may vary.

Rod Diameter	Groove Diameter	Groove Width	TSS Part No.
d_N h9	D_3 H8	L_3 +0.1	
130.0	145.0	9.0	WSA001300
135.0	145.0	7.0	WSA001350
140.0	**155.0**	**9.0**	WSA001400
140.0	160.0	10.0	WSA101400
150.0	165.0	9.0	WSA001500
160.0	**175.0**	**9.0**	WSA001600
170.0	185.0	10.0	WSA001700
175.0	190.0	9.0	WSA001750
180.0	195.0	10.0	WSA001800
200.0	220.0	12.0	WSA002000
220.0	235.0	10.0	WSA002200
270.0	295.0	12.0	WSA002700

The sizes in **bold** type comply with ISO 6195. installation groove Type B. Other sizes on request.
The listed products are technically equivalent but availability and pricing may vary.

Zurcon® Scraper SWP

Single Acting

Metal Reinforcement

For open Groove Assembly

Material:
Zurcon® + Metal

■ Scraper SWP

Description

SWP are polyurethane manufactured lipped wipers with integrated metal reinforcement for open groove assembly. These are typically used in severe applications where there is abrasion due to solid matter on rod surface.

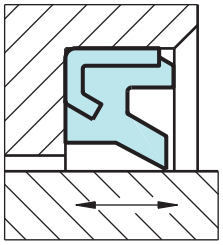

Figure 29 Scraper SWP

Advantages

- Space-saving construction
- Simple small installation groove
- Firm fit in the groove due to metallic press fit
- At regreasing of drag bearing, the scraper lip opens at low overpressure; old grease can escape
- High wear resistance

Application Examples

Due to their outstanding wiping capacities SWP scrapers are recommended wherever there are dusty and humid conditions and especially for the following applications:

- Mobile hydraulic machinery
- Construction machinery
- Link pin seals
- Lift trucks
- Truck cargo cranes
- Agriculture machinery

Technical Data

Operating conditions

Speed:	Up to 1 m/s
Temperature:	-35 °C to +100 °C
Media:	Mineral oil based hydraulic fluids
Groove type:	Open

Important Note:
The above data are maximum values and cannot be used at the same time. e.g. the maximum operating speed depends on material type, pressure, temperature and gap value.
Temperature range also dependent on medium.

Materials

Standard application

Zurcon® Polyurethane:	92 Shore A
Colour:	turquoise
Metal case:	non alloyed steel DIN 1624
Material Set-Code:	Z2022

■ Installation Recommendation

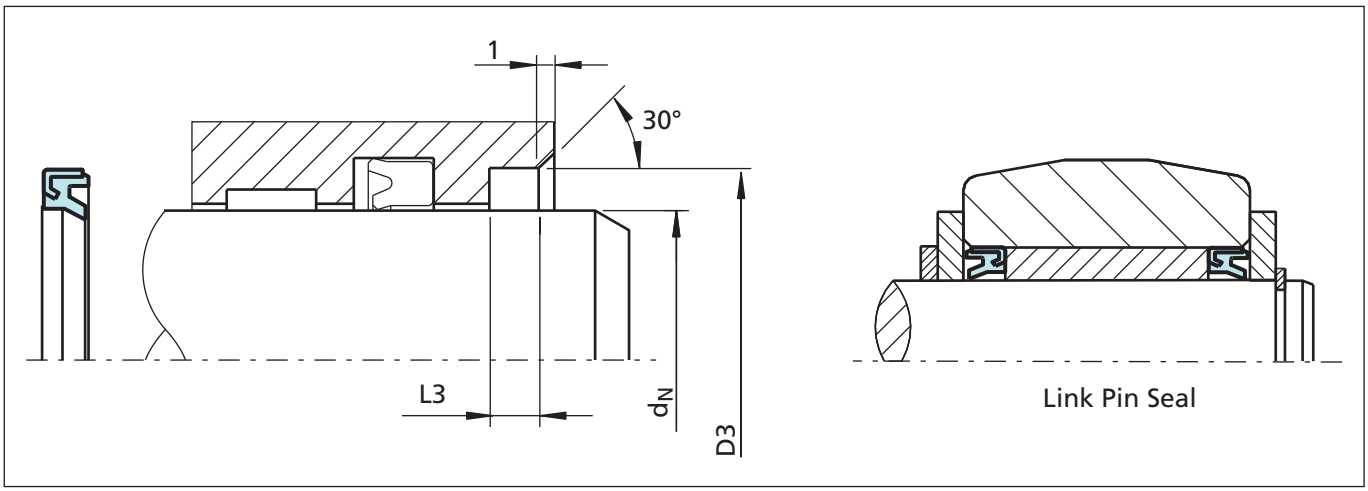

Figure 30 Installation drawing

Ordering Example

Rod diameter:	d_N = 40 mm
Groove diameter:	D3 = 50 mm
TSS Part No.:	WSP0 0 0400 -
Material Set-Code:	Z2022 (standard)
Polypac ref.:	SWP 4050

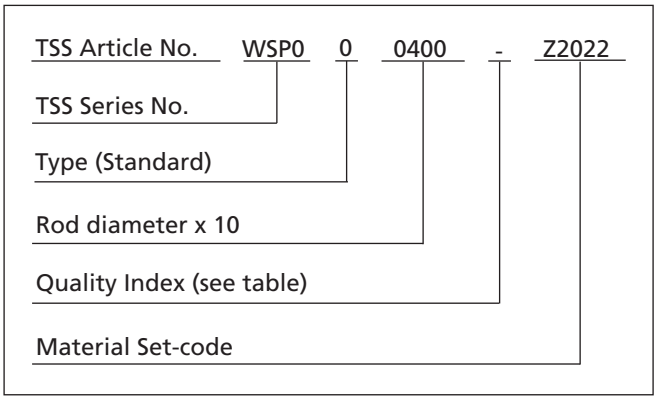

Table XXVIII Installation dimensions / TSS part numbers

Rod Diameter	Groove Diameter	Groove Width	TSS Part No.	Description
d_N h9	D_3 H8	L3 +0.1		
25.0	38.0	7.5	WSP000250	SWP2538
30.0	40.0	4.0	WSP000300	*SWP3040
30.0	43.0	7.5	WSP100300	SWP3043
35.0	45.0	4.0	WSP000350	*SWP3545
35.0	50.0	7.5	WSP100350	SWP3550
36.0	48.0	6.0	WSP000360	SWP3648
38.0	50.0	7.5	WSP000380	SWP3850
40.0	50.0	4.0	WSP000400	*SWP4050
40.0	52.0	6.0	WSP100400	SWP4052

* Can be used for "Link Pin Seal"

Rod Diameter	Groove Diameter	Groove Width	TSS Part No.	Description
d_N h9	D_3 H8	L3 +0.1		
45.0	55.0	3.2	WSP000450	*SWP4555/1
45.0	55.0	4.0	WSP100450	*SWP4555
45.0	60.0	7.5	WSP200450	SWP4560
50.0	60.0	4.0	WSP000500	*SWP5060
50.0	63.0	4.0	WSP100500	*SWP5063
50.0	65.0	7.5	WSP200500	SWP5065
55.0	65.0	3.2	WSP000550	*SWP5565
55.0	68.0	4.0	WSP100550	*SWP5568
55.0	70.0	7.5	WSP200550	SWP5570
56.0	70.0	7.5	WSP000560	SWP5670
60.0	75.0	4.0	WSP000600	*SWP6075/1
60.0	75.0	7.5	WSP100600	SWP6075
63.0	78.0	7.5	WSP000630	SWP6378
65.0	80.0	5.0	WSP000650	*SWP6580/1
65.0	80.0	7.5	WSP100650	SWP6580
70.0	80.0	5.0	WSP000700	*SWP7080
70.0	84.0	8.0	WSP100700	SWP7084
70.0	85.0	4.0	WSP200700	SWP7085/1
70.0	85.0	7.5	WSP300700	SWP7085
71.0	86.0	5.0	WSP000710	*SWP7186
75.0	90.0	7.5	WSP000750	SWP7590
75.0	95.0	10.0	WSP100750	SWP7595
76.5	96.5	10.0	WSP000765	SWP7696
80.0	95.0	5.0	WSP000800	*SWP8095/1
80.0	95.0	7.5	WSP100800	SWP8095
80.0	100.0	10.0	WSP200800	SWP80100
85.0	100.0	4.0	WSP000850	*SWP85100/1
85.0	100.0	10.0	WSP100850	SWP85100
85.0	105.0	10.0	WSP200850	SWP85105
90.0	104.0	8.0	WSP000900	SWP90104
90.0	105.0	6.0	WSP100900	*SWP90105
90.0	110.0	10.0	WSP200900	SWP90110
95.0	115.0	10.0	WSP000950	SWP95115
99.0	115.0	7.5	WSP000990	SWP99115
100.0	115.0	4.0	WSP001000	*SWP100115/2
100.0	115.0	6.5	WSP101000	*SWP100115/1

* Can be used for "Link Pin Seal"

Zurcon® Scraper SWP

Rod Diameter	Groove Diameter	Groove Width	TSS Part No.	Description
d_N h9	D_3 H8	L3 +0.1		
100.0	115.0	7.5	WSP201000	SWP100115
100.0	120.0	10.0	WSP301000	SWP100120
105.0	120.0	7.5	WSP001050	SWP105120
110.0	125.0	4.0	WSP001100	SWP110125/1
110.0	125.0	9.0	WSP101100	SWP110125
110.0	130.0	10.0	WSP201100	SWP110130
115.0	130.0	7.5	WSP001150	SWP115130
115.0	130.0	9.0	WSP101150	SWP115130/1
120.0	140.0	10.0	WSP001200	SWP120140
130.0	145.0	7.5	WSP001300	SWP130145
160.0	175.0	10.0	WSP001600	SWP160175
190.0	210.0	10.0	WSP001900	SWP190210

* Can be used for "Link Pin Seal"

Metal Scraper

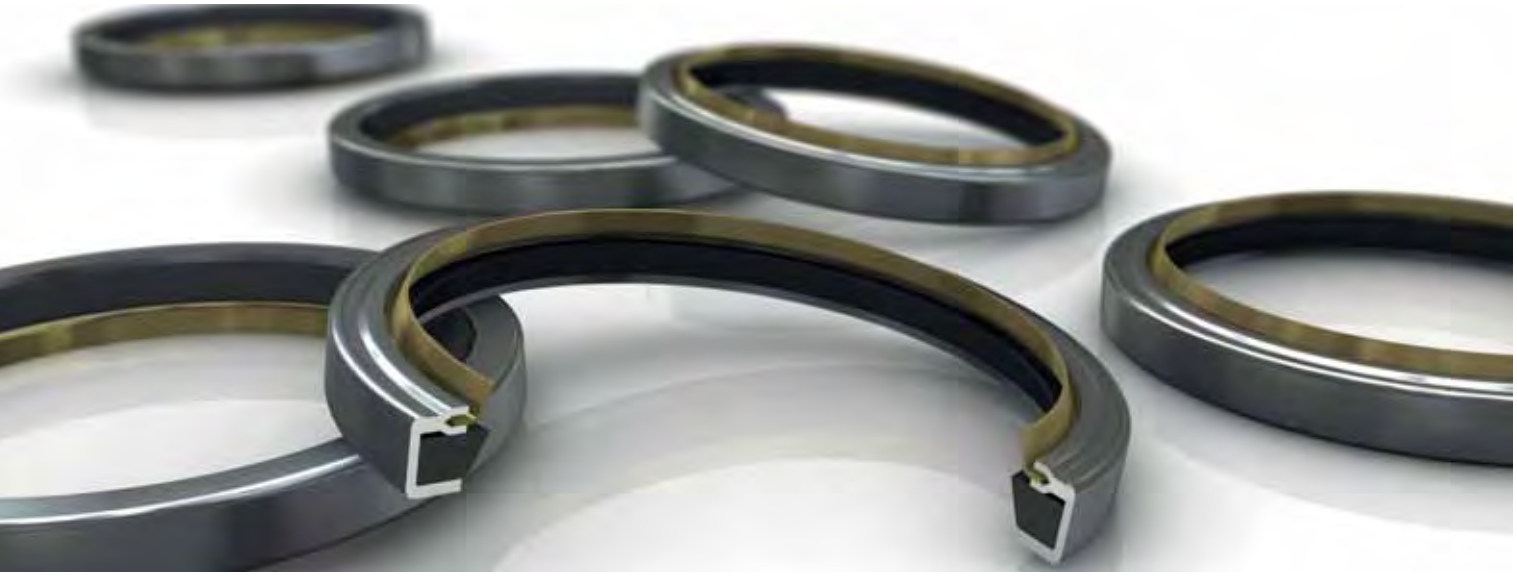

Single Acting

Metal and Elastomer Scrapers
Lips

Material:
NBR, Metal and Brass

■ Metal Scraper

Description

The metal scraper is a single-acting special scraper with two different scraper lips - a thin metallic lip and a elastomer lip. The two scraper lips are arranged in tandem behind one another in a compact metal housing.

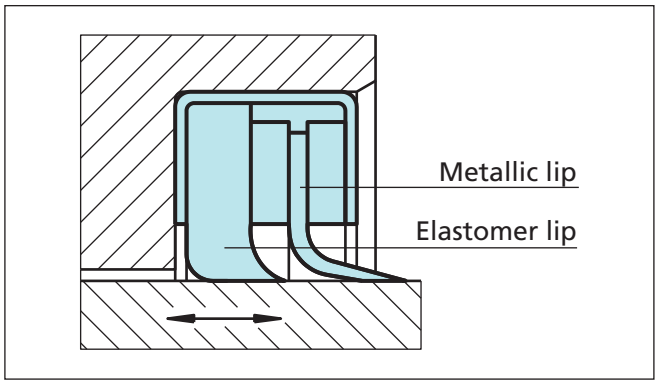

Figure 31 Metal Scraper

The metal scraper lip is designed to remove firmly adhering soiling and ice particles. The secondary lip of elastomer material enhances the overall scraping effect, i.e. fine sand grains, water and similar foreign matter are reliably scraped off. Both scraper lips have a smaller diameter than the nominal diameter of the piston rod, thus ensuring a tight fit of the scraper lips. The metallic lip is guided flexibly in radial direction and can easily follow any possible deflections of the piston rod.

Advantages

- Very good scraping effect, even with firmly adhering dirt, e.g. mud, ice
- Very abrasion resistant
- Tight fit in the groove due to the metal case
- Easy installation in open grooves

Technical Data

Speed:	Max. 1 m/s with reciprocating movements
Temperature:	-30 °C to +120 °C
Media:	Mineral oil-based hydraulic fluids, flame retardant hydraulic fluids (HFA, HFB, HFC), water, air, etc.

Important Note:
The above data are maximum values and cannot be used at the same time. e.g. the maximum operating speed depends on material type, pressure, temperature and gap value.
Temperature range also dependent on medium.

Materials

Inner scraper lip:	Acrylonitrile butadiene rubber, NBR, 70 Shore A Code N7
Metal housing:	Sheet metal 1.0204 (AISI 1008) or similar Code M
Outer scraper lip:	Brass Code S

Other materials for scraper lips and housing available on request. Also available in an imperial (inch) size range.

■ Installation Recommendation

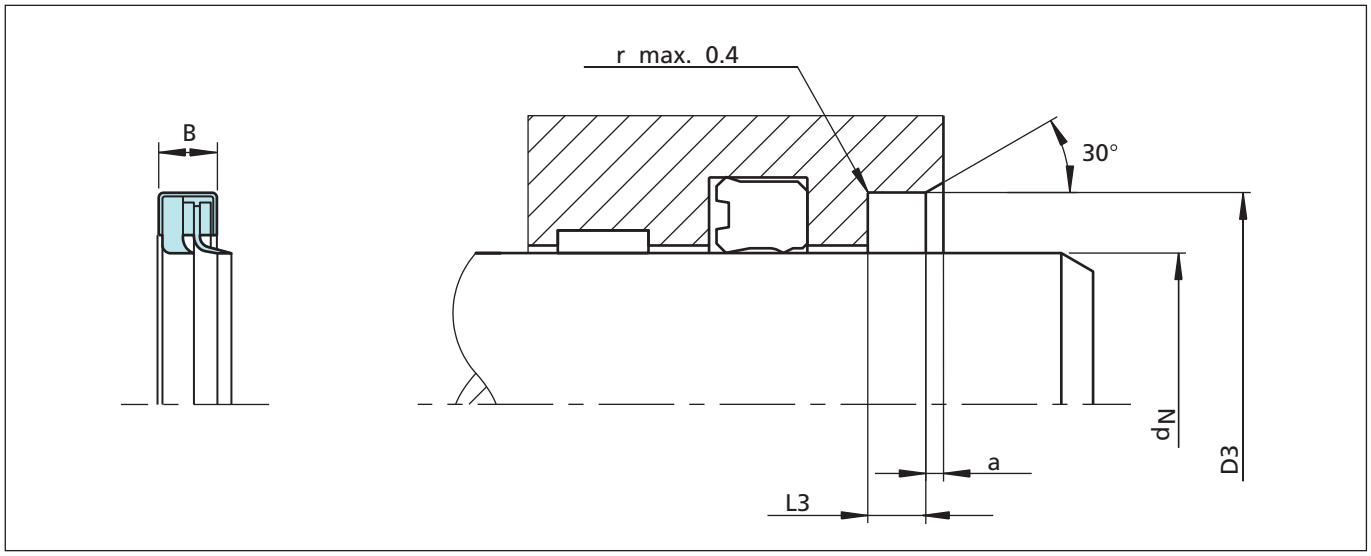

Figure 32 Installation drawing

Ordering Example

Metal scraper
Rod diameter: d_N = 80.00 mm
Groove diameter: D_3 = 96.00 mm
Groove width: L_3 = 8.50 mm
TSS Part No.: WM0100800 (from Table XXIX)
Material: Standard materials
Material code N7MS

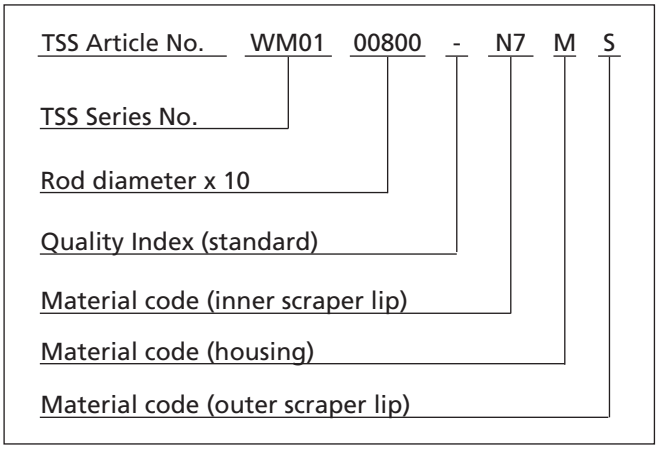

Table XXIX Installation dimensions / TSS part numbers

Rod Diameter	Groove Diameter	Groove Width	Chamfer	Width	TSS Part No.
d_N f8/h9	D_3 H8	L_3 +0.2	a min.	B	
12.0	**25.0**	**7.0**	**2.0**	**6.5**	**WM0000120**
14.0	**27.0**	**7.0**	**2.0**	**6.5**	**WM0000140**
15.0	28.0	7.0	2.0	6.5	WM0000150
16.0	**29.0**	**7.0**	**2.0**	**6.5**	**WM0000160**
18.0	**31.0**	**7.0**	**2.0**	**6.5**	**WM0000180**
20.0	**33.0**	**7.0**	**2.0**	**6.5**	**WM0000200**
22.0	**35.0**	**7.0**	**2.0**	**6.5**	**WM0000220**
25.0	**38.0**	**7.0**	**2.0**	**6.5**	**WM0000250**
28.0	**41.0**	**7.0**	**2.0**	**6.5**	**WM0000280**
30.0	43.0	7.5	2.0	7.0	WM0000300
32.0	**45.0**	**7.5**	**2.0**	**7.0**	**WM0000320**
35.0	48.0	7.5	2.0	7.0	WM0000350
36.0	**49.0**	**7.5**	**2.0**	**7.0**	**WM0000360**
38.0	51.0	7.5	2.0	7.0	WM0000380
40.0	**53.0**	**7.5**	**2.0**	**7.0**	**WM0200400**
45.0	**58.0**	**7.5**	**2.0**	**7.0**	**WM0000450**
50.0	**64.0**	**8.0**	**2.0**	**7.5**	**WM0000500**
55.0	69.0	8.0	2.0	7.5	WM0000550
58.0	72.0	8.0	2.0	7.5	WM0000580
60.0	74.0	8.0	2.0	7.5	WM0000600
63.0	**77.0**	**8.0**	**2.0**	**7.5**	**WM0000630**
65.0	79.0	8.0	2.0	7.5	WM0000650
70.0	**84.0**	**8.0**	**2.0**	**7.5**	**WM0000700**
75.0	89.0	8.0	2.0	7.5	WM0000750
80.0	**96.0**	**8.5**	**2.0**	**8.0**	**WM0100800**
85.0	101.0	8.5	2.0	8.0	WM0000850
90.0	**106.0**	**8.5**	**2.0**	**8.0**	**WM0000900**
95.0	111.0	8.5	2.0	8.0	WM0000950
100.0	**120.0**	**9.0**	**3.0**	**8.5**	**WM0001000**
110.0	**130.0**	**9.0**	**3.0**	**8.5**	**WM0001100**
120.0	140.0	9.0	3.0	8.5	WM0001200
130.0	150.0	9.0	3.0	8.5	WM0001300
140.0	**160.0**	**9.0**	**3.0**	**8.5**	**WM0001400**
150.0	170.0	9.0	3.0	8.5	WM0101500
160.0	**180.0**	**9.0**	**3.0**	**8.5**	**WM0001600**
170.0	190.0	9.0	3.0	8.5	WM0001700

The rod diameters in **bold** type comply with the recommendations of ISO 3320. Other sizes on request. Inch sizes can be supplied.

Metal Scraper

Rod Diameter	Groove Diameter	Groove Width	Chamfer	Width	TSS Part No.
d_N f8/h9	D_3 H8	L_3 +0.2	**a** min.	**B**	
180.0	**200.0**	**12.0**	**3.0**	**10.0**	**WM0001800**
200.0	**230.0**	**12.0**	**3.0**	**10.0**	**WM0102000**
210.0	230.0	12.0	3.0	10.0	WM0002100
220.0	**250.0**	**12.0**	**3.0**	**10.0**	**WM0002200**

The rod diameters in **bold** type comply with the recommendations of ISO 3320. Other sizes on request. Inch sizes can be supplied.

Non Standard Scrapers

Available upon Request

Old Series

Special Series

Polypac® TWP

The scraper TWP are polyurethane manufactured double lip with integrated metal reinforcement for open groove assembly. These are typically used in heavy duty applications like excavators and earth moving machine.

Diameter Range mm	Pressure Range MPa	Temperature Range °C	Velocity m/s
40 - 80	-	-35 to +100	Up to 0.5

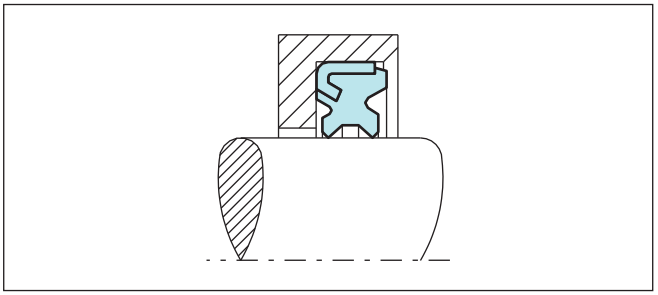

Polypac® UWR/PC

The UWR/PC is double-acting polyurethane wiper with integrated metal reinforcement for open groove assembly. The double lip guaranties a reliable scraper effect in one side and the sealing function of the oil film on the other.

Diameter Range mm	Pressure Range MPa	Temperature Range °C	Velocity m/s
35 - 150	-	-35 to +100	Up to 0.5

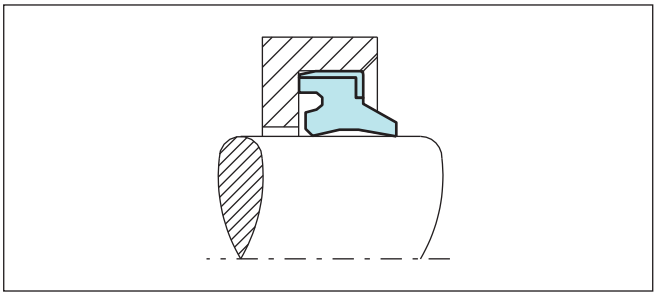

Turcon® Excluder® with advanced scraping lip

This special Turcon® Excluder® is double acting and used in medium to heavy-duty applications, where a gap between the rod and the gland in front of the Excluder® is not wanted. The scraping lip activated by embedded metal spring or O-Ring makes it very effective in abrasive dusty environment even when the cylinder rod is pointing upwards.

Diameter Range mm	Pressure Range MPa	Temperature Range °C	Velocity m/s
40 - 2600	-	-45 to +200	Up to 15

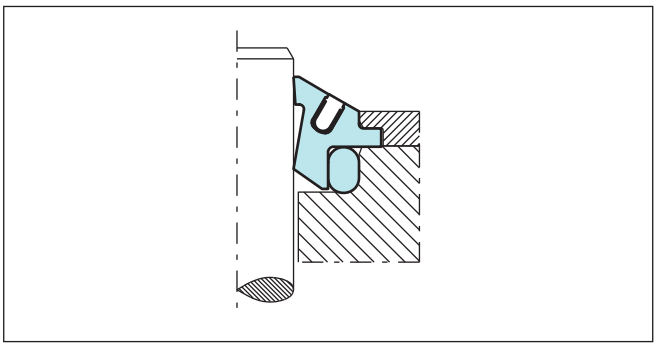

Turcon® Variseal®
for hydraulic components working in agressive environments

The Turcon® Variseal® **M2S** is a single acting scraper consisting of a U-shaped scraper jacket and a V-shaped corrosion resistant spring.
The characteristic of the Turcon® Variseal® M2S is that due to the use of chemically inert materials it can form an effective barrier protecting the sealing system in harsh environments. The Turcon® Variseal® M2S can be used as a seal, especially for highly viscous media and media containing particles.
Interchangeable with O-Ring/Back-up Ring combination after MIL - G - 5514F and ISO 6194

Diameter Range mm	**Pressure Range** MPa	**Temperature Range** °C	**Velocity** m/s
3 - 2600	-	-70 to +260	Up to 10

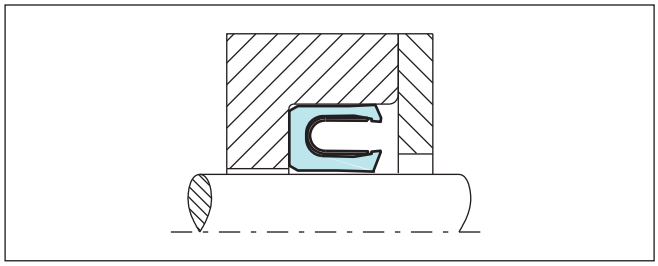

Part IV
Slydring® - Wear Rings

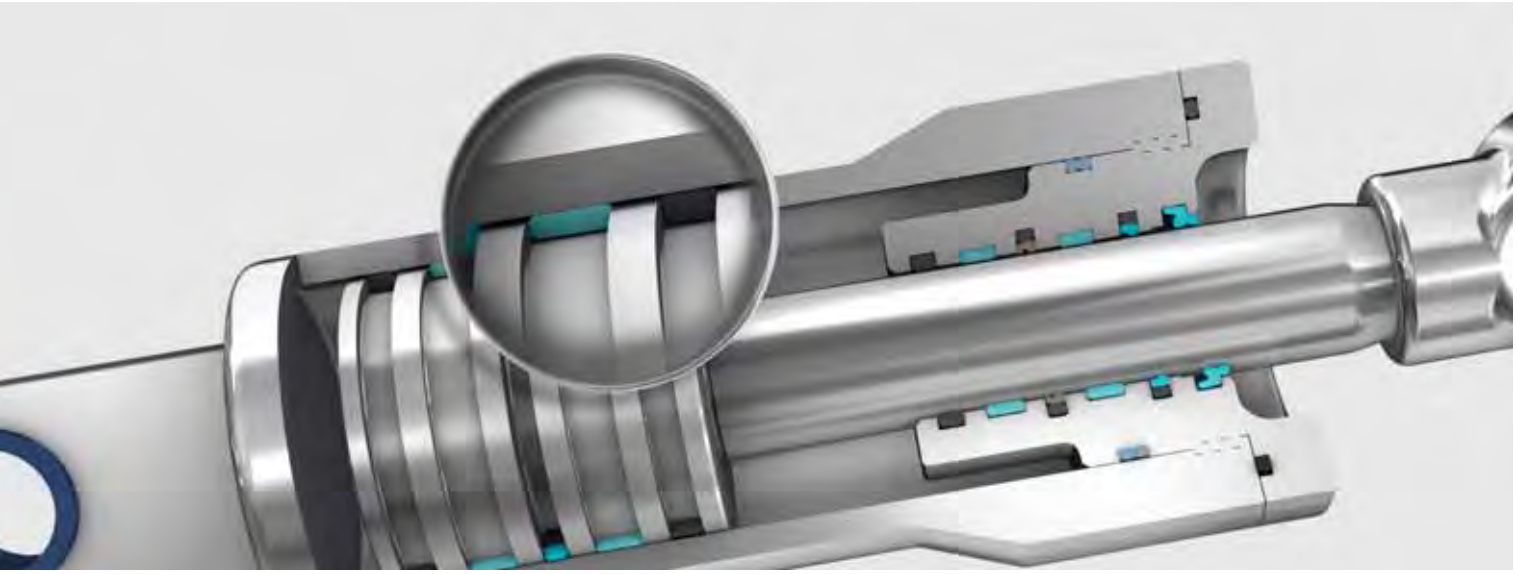

Contents

Choice of Slydring® 4
Design Instructions 8
Turcite® and Zurcon® Slydring® for Piston and Rod 10
HiMod® Slydring® for Piston and Rod 23
Orkot® Slydring® for Piston and Rod 46

■ Choice of Slydring®

The function of Slydring® is to guide the piston and piston rod of a hydraulic cylinder and to absorb the transverse forces which occur. At the same time, metallic contact between the sliding parts of the cylinder, e.g. piston and cylinder barrel or rod and cylinder head, must be prevented. Non-metallic guide rings offer major benefits compared with the traditional metallic guides:

- Cost efficient production
- High load bearing capacity
- Eliminates local stress concentrations
- Wear-resistant, long service lives
- Metal/plastic pairing eliminates fretting and seizure
- Favourable friction behaviour
- Damping of mechanical vibrations
- Good wiping effect, embedding of foreign particles possible
- Protection of the seal against "dieseling"
- Free choice of material of the metal components as guiding properties are no longer required
- Eliminates hydrodynamic pressure problems in the guide system
- Simple closed groove, easy installation
- Low service costs

Materials

In view of the different specific demands made on piston and rod guides, various Slydring® materials are available:

- Highly wear-resistant, low friction, specially modified Turcite® materials for low to medium duty with limited radial forces
- HiMod® materials with friction-reducing fillers for medium to heavy duty
- Orkot® fabric composite materials for heavy duty and high radial forces

In order to choose the most suitable Slydring®, it is first necessary to know all the required functional parameters. Table I can be used to make an initial preselection of the Slydring® and the materials to meet the demands of the application.

Before the final choice of Slydring® and material is made, the details and information must be checked in the relevant data sheets of Slydring® materials.

In principle, piston Slydring® and rod Slydring® are interchangeable if the difference in size is taken into consideration, e.g. piston Slydring®, diameter 100 x 2.5 mm thick can be used as a piston rod Slydring® diameter 95 x 2.5 mm thick. Depending on the material and dimensions of the Slydring®, the thickness tolerance is in the range from +0.00/-0.08 mm except for Turcite Slydring® Article GP41 + GR41 and GP43 + GR43 where it is +0.02/-0.03 mm.

Please do not hesitate to contact our Technical Department for further information on specific applications and special technical questions.

Table I Selection Criteria for Slydring®

Slydring®		Application					Standard[1]	Installation	Material
Type	Page	Field of Application				Mating Surface	ISO	Size Range mm	Recommended Slydring® Material
			Light	Medium	Heavy				
Turcite® / Zurcon® Slydring®	10	Mobile hydraulics	●	–	–	Steel Steel, hardchromed Steel hardened Cast iron	ISO 10766	Off-the-roll up to diameter 4200	Turcite® T47
		Standard cylinders	●	●	–				
		Machine tools	●	●	–				
		Valves	●	●	–	Mild steel Steel Stainless steel Aluminium			Turcite® T51
		Rotary manifolds	●	●	–				
		Gas equipment	●	●	–				
		Pneumatics	●	–	–				
		Wind Power	●	●	–	Mild steel Steel, hardchromed Cast iron Stainless steel Aluminium			Turcite® M12
		Off-road vehicles	●	●	–				
		Injection moulding machines	●	●	–				
		Automotive industry	●	●	–				
		Foodstuff industry	●	●	–	Steel Mild steel Steel, hardchromed Stainless steel Aluminium, Ceramic coating	ISO 10766	Off-the-roll up to diameter 4200	Zurcon® Z80 / Z81 UHMWPE
		Water hydraulics	●	●	–				
		Dry application	●	●	–				
		Pneumatics	●	●	–				
HiMod® Slydring®	23	Mobile hydraulics	●	●	–	Steel Steel, hardchromed Cast iron	ISO 10766	Rings up to diameter 300	HiMod® HM061 POM/Glass fibre
		Standard cylinders	●	●	–				
		Agricultural machinery	●	●	–				
		Mobile hydraulics	●	●	●	Steel Steel, hardchromed Cast iron			HiMod® HM062 PA/Glass fibre + PTFE
		Standard cylinders	●	●	–				
		Agricultural machinery	●	●	–				
Orkot® Slydring®	46	Mobile hydraulics	–	●	●	Steel Steel, hardchromed Cast iron Ceramic coatings Stainless steel	ISO 10766	Rings up to diameter 1600[2]	Orkot® C320 Polymer/fabric
		Standard cylinders	●	●	●				
		Presses	●	●	●				
		Mobile hydraulics	–	●	●				Orkot® C380 Polymer/fabric
		Standard cylinders	●	●	●				
		Water hydraulics	●	●	●				
		Shipping and marine engineering	●	●	●				
		Presses	●	●	●				
		Mobile hydraulics	–	●	●			Rings up to diameter 500	Orkot® C932 Phenolic/cotton
		Standard cylinders	●	●	●				
		Presses	●	●	●				

1) For Slydring® to other standards, e.g. to French standard NF E 48-037, please contact us.
2) Segments made from strip material can be used for larger diameters.

Forms of Supply

Two characteristics must be observed with respect to the forms of supply for Slydring®:

- Type of cut

Figure 1 shows the angle cut which are the most frequently used standard type of cut. Rings with other types of cut are available on request. Design Code as shown in Table III.

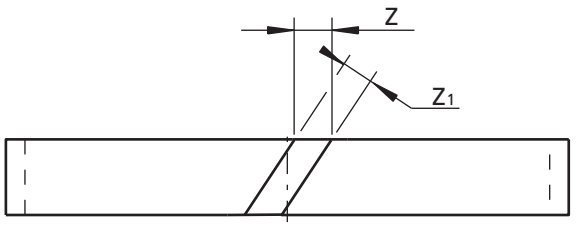

Angle cut, standard design

Note: "Z" is the gap size for Turcite® and Zurcon® Slydring®
"Z_1" is the gap size for HiMod® and Orkot® Slydring®

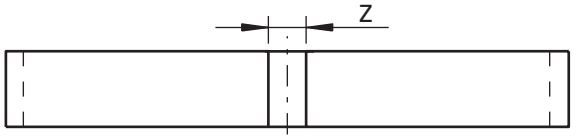

Straight cut, special design

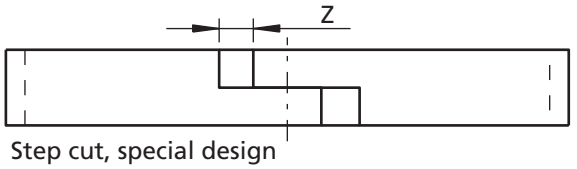

Step cut, special design

Figure 1 Type of cut

- Design type

Slydring® have a rectangular cross-section with rounded or chamfered edges, thus preventing impermissible edge forces in the corner radii of the grooves. The chamfers also serve to facilitate installation, e.g. when inserting into the cylindrical tube or guide bush.

Slydring® are supplied ready to fit with the gap necessary (dimension Z or Z_1) for their function. The ring ends are finished as standard with an angle cut.

For further details, please refer to Table II.

Slydring® are depending on material supplied as split rings and/or as strip material.

Strip material is available in rolls or precut to size as listed in Table II.

Table II Forms of Supply for Slydring®

Material	Ring Diameter mm	Cut Strip for Diameter mm	Off-the-Roll
Turcite® T47/T51/M12	-	8 - 4200	See Table V
Zurcon® Z80 / Z81	on request	30 - 4200	on request
Orkot® C320/C380	16 - 1600	300 -2000	see page 46
Orkot® C932	16 - 500	-	-
HiMod® HM061	up to 300	-	-
HiMod® HM062	up to 300	-	-

Table III Design Codes for Cut

Material	Turcite®		Zurcon®	HiMod®	Orkot®	
	T47 T51 M12		Z80	HM061 HM062	C320 C380 C932	C320 C380
Code for cut	**Strip** With Teardrop structure*	**Strip** Without Teardrop structure	**Strip** Without Teardrop structure	**Ring** Without Teardrop structure	**Ring** Without Teardrop structure	**Strip** Without Teardrop structure
Angle cut	**0**	L	**0**	**0**	**0**	A
Straight cut	B	D	D	**D****	H	D
Step cut	C	E	E	E	-	E

Design Code **0**, in bold types are the standard Slydring® versions

* Standard for **Turcite®** Slydring®
** HiMod® Wear Rings for non ISO groove dimensions have as standard a straight cut Code D.

Teardrop structure: A detailed description can be found on page 10.

■ Design Instructions

Selection of Slydring®

An initial choice can be made for various applications by checking the Selection Criteria for Slydring® in Turcite®, Zurcon®, HiMod® or Orkot®, see Table I and the pages 10, 14, 23, 25 and 46.

The values for the load on the Slydring® are valid for a load distribution as illustrated in Figure 2. The flexibility of the materials ensures a relatively constant specific load, irrespective of the size of the radial forces F, as with increasing radial loading, the guide surface subjected to the load increases also.

The radial forces which occur can vary within wide ranges and cannot always be calculated exactly in advance. For such cases, a safety factor of at least 2 is recommended when calculating (see calculation example).

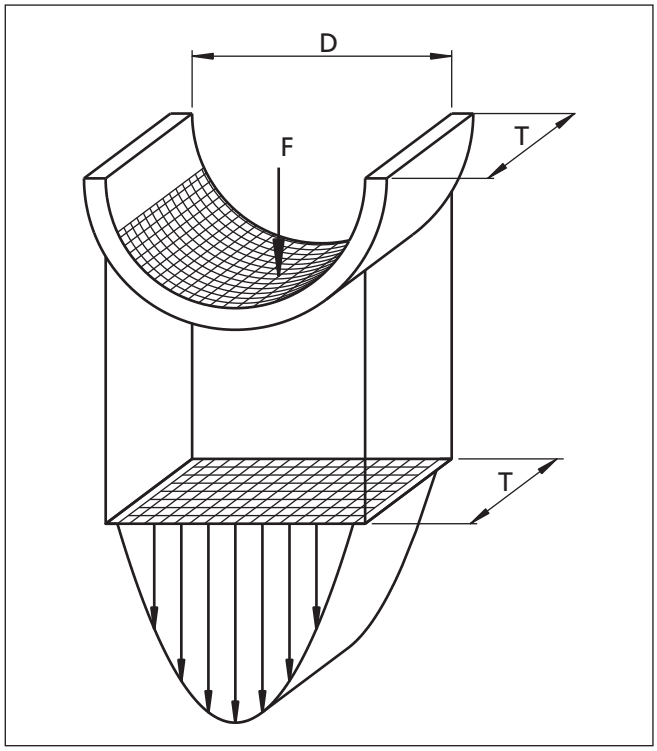

Figure 2 Load distribution

The large effective bearing area of non-metallic Slydring® gives low maximum contact pressure.

Dimensioning of Slydring®

The radial bearing pressure and the resulting elastic deflection are important parameters in the design of the Slydring®. The radial offset resulting from the dimensional tolerances, deflection and wear should always be less than the smallest gap to be sealed by the system.On request, we are willing to carry out dimensioning calculations for specific applications.

A rough estimate of the number and width of Slydring® required can be calculated using the following formula:

$$\text{Slydring® width } T_{total} = \frac{F \times f}{d_N \times Pr}$$

where:
F = Maximum radial load [N]
f = Safety factor
d_N = Rod diameter [mm]
Pr = Radial Slydring® pressure [N/mm^2]
Example:
d_N = 60 mm
F = 40.000 N
t = 40 °C
f = 2

Slydring® material Orkot® C 380
Pr 100 N/mm^2

$$T_{total} = \frac{40.000 \times 2}{60 \times 100} = 13.3 \text{ mm}$$

From Table IV, a groove with a width of 15 mm or 2 grooves with widths of 9.7 mm are selected. The installation of two strips is recommended as this gives a wider guide length.

Selected:
2 strips Series GR69 with a groove width L_2 = 9.7 mm
See Figure 4 and 5.

The standard installation arrangement for pistons and rods is shown in Figure 3 and Figure 4.

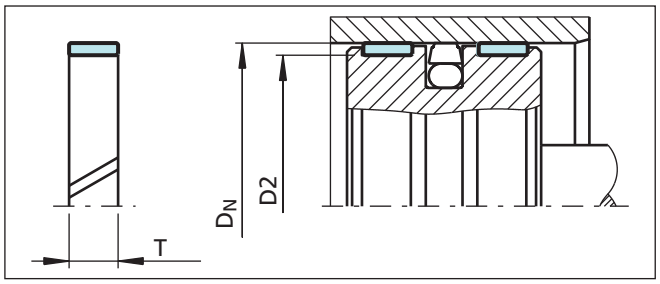

Figure 3 Piston guide

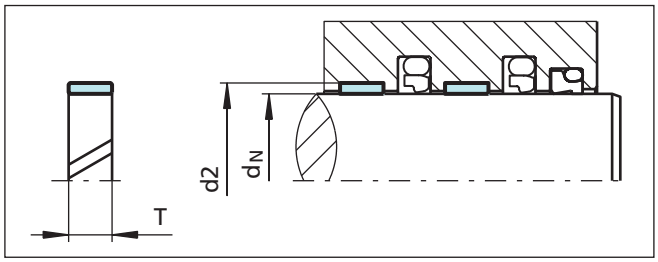

Figure 4 Rod guide

To further improve the operational safety, particularly under high loads, the installation of a 3rd strip made of material Turcite® T47 is recommended. It is installed on the oil side and serves eg as an internal scraper.

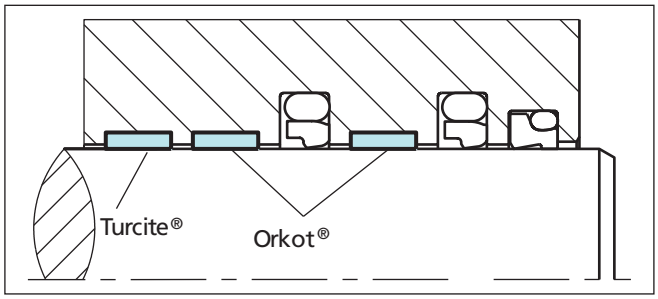

Figure 5 Rod guide for high loads
(See also Figure 15)

■ Turcite® Slydring® for Piston and Rod

Description

Turcite® Slydring® are used as piston and rod guides due to their outstanding friction behaviour, stick-slip free running and good resistance to high temperatures and chemicals.

Slydring® are available as off-the-roll materials for cutting to length in the users works as listed in Table V. Sections cut to size ready for installation is available for rod and piston diameters according to Table II.

Slydring® have a geometrically rectangular cross-section and are chamfered at the edges for easy installation into the grooves.

- Teardrop structure

Slydring® up to and including 4 mm radial thickness in Turcite® materials are as standard supplied with "teardrop" structure on the sliding surfaces. This structure comprises small lubricant pockets on the surface which improve the initial lubrication and promote the formation of a lubricant film. They also help to protect the seal system through their ability to embed any foreign particles. In order to be able to use the strip material for both piston and piston rod guides, the rings have this same teardrop structure on both sides.

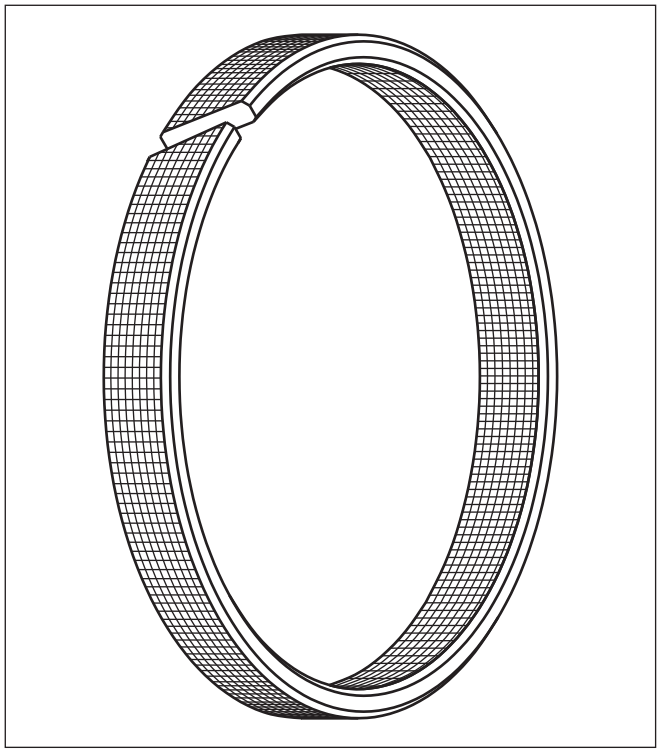

Figure 6 Turcite® Slydring® with teardrop structure

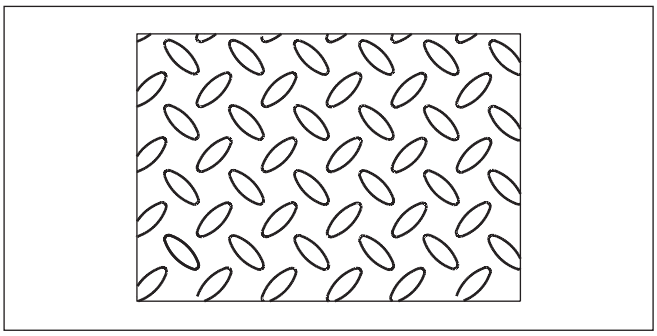

Figure 7 Teadrop structure for Turcite® Slydring®

Slydring® can also be delivered without teardrop structure. In this case, this must be indicated in the TSS Article No. (see Design Code for cut/type in Table III).

Advantages

- No stick-slip effect when starting for smooth operation even at very low speeds
- Minimum static and dynamic friction coefficient for low operating temperature and energy loss
- Outstanding lubrication conditions further improved by the Teardrop structure
- Suitable for non lubricating fluids depending on Turcite® material for optimum design flexibility
- High wear resistance ensures long service life
- Installation grooves according to ISO 10766
- Suitable for most hydraulic fluids in relation with the majority of modern hardware materials and surface finish depending on material selected.
- Suitable for new environmentally safe hydraulic fluids
- The embedding of foreign particles is enhanced
- Good damping effect, absorbs vibrations

Application Examples

The Turcite® Slydring® is successfully applied in demanding applications as a standard guiding element for hydraulic operated pistons, plus for piston rods with special requirements, in:

- Machine tools
- Injection moulding machines
- Press brakes
- Presses
- Robotics & Handling machinery
- Automation
- Positioning cylinders
- Servo hydraulics
- Piston accumulators
- Shock absorber
- Valves for hydraulic & pneumatic circuits
- Agriculture
- Chemical and Process Industry

Technical Data

The Turcite® Slydring® with angle cut is recommended for reciprocating movements

Speed:	Up to 15m/s
Temperature:	-60 °C to +150 °C (200 °C)
Media:	Mineral Oil based Hydraulic fluids, barely flammable hydraulic fluids, environmentally safe hydraulic fluids (biological degradable oils), water, air and others. Depending on the Turcite® material compatibility.
Clearance:	The maximum permissible radial clearance smax is depending on the actual sealing system.
Radial Slydring® pressure Pr:	Max. 15 N/mm^2 at 25 °C Max. 12 N/mm^2 at 80 °C Max. 8 N/mm^2 at 120 °C

When calculating the width of Turcite® Slydring® it is recommended to use a safety factor f=2 (see page 8).

With the Turcite® materials it must be taken into account that the permissible surface pressure decreases with increasing temperatures. The load bearing ability for dynamic applications in practice is dependent primarily on the operating temperature. This should therefore generally not exceed 150 °C.

Important Note:
The above stated limits for pressure and speed are maximum values individually. Friction heat generated by the combination of pressure and speed may cause local heat built-up. Care should be taken not to apply high values for pressure and speed at the same time.

Materials

Standard Application:

- For hydraulic components with reciprocating movement in mineral oils or medium with good lubricating performance. Low friction, high resistance to wear, heat and chemicals:

Turcite® T47 (bronze filled)

Special Application:

- For lubricated and poor lubricated linear and slow rotary moving hydraulic and pneumatic components:

Turcite® T51 (carbon filled)

- For all commonly applied hydraulic fluids including fluids with low lubrication performance, lowest friction and wear, improved absorption of abrasive contaminants, no wear or abrasion of counter surface:

Turcite® M12 (mineral fiber and additive filled)

Table IV Serial Numbers for Turcite® Slydring® in T47, T51, M12

Piston Serial No.	Rod Serial No.	Off-the-roll Serial No.	Groove Width L_2	Ring Thickness W
GP06	GR06	GM0600000-	6.00	1.00
GP22	GR22	GM2200000-	3.20	1.50
GP31	GR31	GM3100000-	10.00	1.50
GP41	GR41	GM4100000-	2.50	1.55
GP43	**GR43**	**GM4300000-**	**4.00**	**1.55**
GP49	GR49	GM4900000-	9.70	2.00
GP53	GR53	GM5300000-	15.00	2.00
GP64	GR64	GM6400000-	4.20	2.50
GP65	**GR65**	**GM6500000-**	**5.60**	**2.50**
GP67	GR67	GM6700000-	6.30	2.50
GP68	GR68	GM6800000-	8.10	2.50
GP69	**GR69**	**GM6900000-**	**9.70**	**2.50**
GP73	**GR73**	**GM7300000-**	**15.00**	**2.50**
GP74	GR74	GM7400000-	20.00	2.50
GP75	**GR75**	**GM7500000-**	**25.00**	**2.50**
GP76	GR76	GM7600000-	30.00	2.50
GP94	GR94	GM9400000-	20.00	3.00
GP98	**GR98**	**GM9800000-**	**25.00**	**4.00**
GP99	-	GM9900000-	9.70	4.00

Further dimensions on request.

Dimensions in **bold** are suitable for installation in grooves to ISO 10766.

Table V Turcite® Slydring® Serial No. GM Length of the roll

Turcite® T47, T51, M12		
Serial number	**Thickness W mm**	**Minimum length m**
GM06	1.00	27.0
GM22 GM31	1.50	19.0
GM41 GM43	1.55	18.5
GM49 GM53	2.00	12.0
GM64 GM65 GM67 GM68 GM69 GM73 GM74 GM75 GM76	2.50	9.0
GM94	3.00	7.0
GM98 GM99	4.00	4.5

Off-the-roll material can only be supplied as complete rolls.

Length of roles varies depending on thickness and material.

Turcite® from the roll,
calculation of the Linear Length

The linear length of Turcite® and Zurcon® is calculated such that a gap "Z" is created at the ends of the strip after installation (see Figure 3 and Figure 4). This is required for the following reasons:

- Compensation of the linear expansion of the strips due to the effects of temperature
- Avoidance of intermediate pressures and entrained pressures.

When ordering strips off-the-roll for manufacturing of Turcite® and Zurcon® Slydring® in your own works, the length of the strip can be calculated using the following formulae:

Piston Slydring®:

$L = c \times (D_N - W) - k$ [mm]

Rod Slydring®:

$L = c \times (d_N + W) - k$ [mm]

D_N = Bore diameter [mm]

d_N = Rod diameter [mm]

W = Ring thickness [mm]

c = 3.11 material factor, valid for Turcite® and Zurcon® Materials

k = Temperature constant:
0.8 for operating temperatures up to 120 °C.

2.0 only for applications > 120 °C.

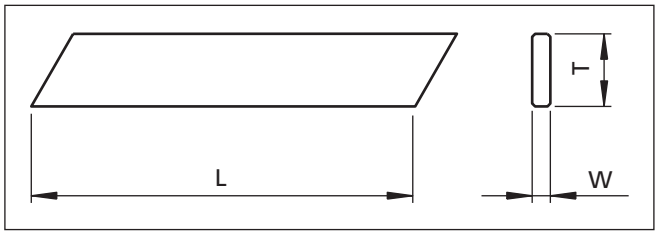

Figure 8 Cut length

■ Zurcon® Slydring® for Piston and Rod

Zurcon® Z80

Z80 is a UHMW-PE (ultra high molecular weight polyethylene) material preferred for use in water hydraulics and pneumatics due to excellent friction and wear properties. For foodstuff and medical applications use Zurcon® Z81, which meets the requirements in FDA CFR 21, Commission Directive 2002/72/EC and amendments and USP 26 Chapter 87 + 88.

Advantages

- Good lubrication and wear performance
- Self-lubricating
- Low friction value
- No water absorption
- In compliance with FDA
- Excellent resistance to chemicals
- High wear resistance

Application Examples

- Water hydraulics
- Dry pneumatics
- Filling machines
- Food processing
- Medical equipment
- Ceramic coated hydraulics

Technical Data

Velocity, reciprocating:	Max. 2.0 m/s
Temperature:	-60 °C to +80 °C (100 °C)
Radial Slydring® pressure Pr:	Max. 25 N/mm^2 at 25 °C Max. 8 N/mm^2 from 60 °C to 80 °C

When calculating the width of Zurcon® Slydring® it is recommended to use a safety factor f=2 (see page 8).

Important Note:
The above stated limits for pressure and speed are maximum values individually. Friction heat generated by the combination of pressure and speed may cause local heat built-up. Care should be taken not to apply high values for pressure and speed at the same time.

Table VI Serial Numbers for Slydring® of Material Zurcon® Z80

Piston Serial No.	Rod Serial No.	Off-the-roll TSS Article No.	Groove Width L_2	Ring Thick-ness W
GP41	GR41	GM4100000-Z80	2.50	1.55
GP43	GR43	GM4300000-Z80	4.00	1.55
GP65	GR65	GM6500000-Z80	5.60	2.50
GP69	GR69	GM6900000-Z80	9.70	2.50
GP73	GR73	GM7300000-Z80	15.00	2.50
GP75	GR75	GM7500000-Z80	25.00	2.50

Further dimensions on request.

Table VII Zurcon® Z80 Slydring® Length of the Roll

Zurcon® Z80 / Z81	Ring Thickness
Length of the Roll	W
25.0 m	1.55
15.0 m	2.50

Off-the-roll material can only be supplied as complete rolls.

Zurcon® from the roll, calculation of the linear length, see page 13

■ Installation Recommendation, Turcite® and Zurcon® Slydring® for Piston According to ISO 10766 Groove Dimensions

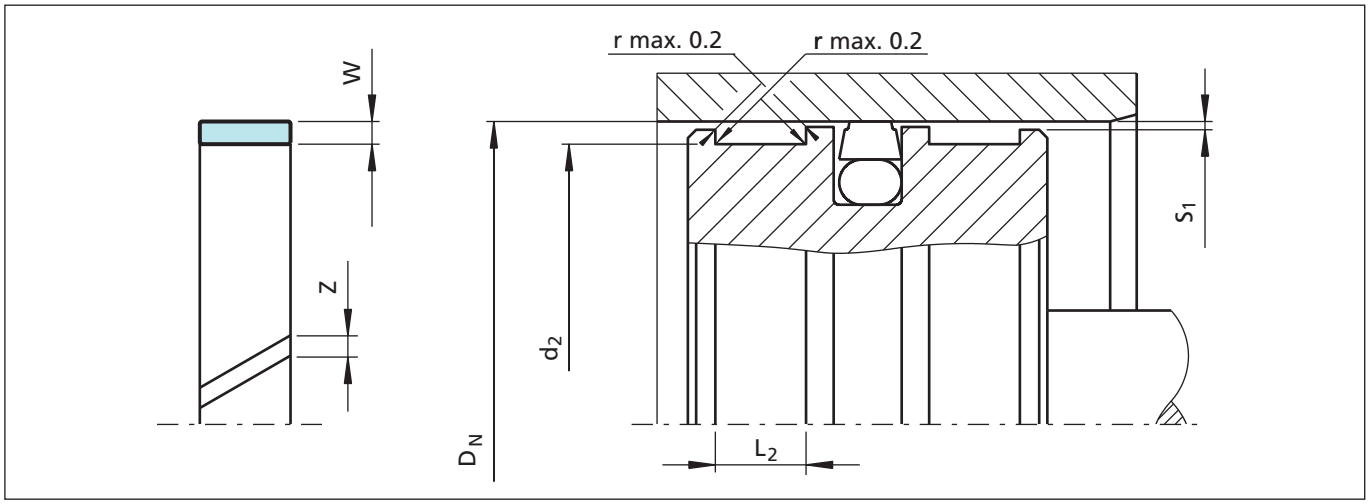

Figure 9 Installation drawing

Table VIII Installation dimensions

Serial No.	Bore Diameter[1)]	Groove Diameter	Groove Width	Ring Thickness	Ring Gap
	D_N H9	d_2 h8	L_2 +0.2	W	Z
GP41	8 - 20.0	D_N - 3.10	2.50	1.55	3)
GP43	10 - 50.0	D_N - 3.10	4.00	1.55	3)
GP65	16 - 140.0	D_N - 5.00	5.60	2.50	3)
GP69	60 - 220.0	D_N - 5.00	9.70	2.50	3)
GP73	130 - 400.0	D_N - 5.00	15.00	2.50	3)
GP75	280 - 999.9	D_N - 5.00	25.00	2.50	3)
GP75X	1000 - 4200.0	D_N - 5.00	25.00	2.50	3)
GP98	280 - 999.9	D_N - 8.00	25.00	4.00	3)
GP98X	1000 - 2200.0	D_N - 8.00	25.00	4.00	3)
GP99[2)]	100 - 999.9	D_N - 8.00	9.70	4.00	3)

1) Recommended diameter ranges. 2) Non ISO 10766 standard. 3) Calculation of the linear length, see page 13

For Slydring® to other standards, e.g French standard NF E 48-037, please contact us.

Table IX Radial Clearance S_1[4)]

Bore Dia. D_N	$S_{1\ min.}$	$S_{1\ max.}$
8 - 20	0.20	0.30
20 - 100	0.25	0.40
101 - 250	0.30	0.60
251 - 500	0.40	0.80
501 - 1000	0.50	1.10
>1001	0.60	1.20

4) Specifications valid only in the area of the Slydring®, but not for the seal area. If the radial clearance S for the chosen seals is smaller than $S_{1\ min.}$ there is risk for metal to metal contact.

Table X Surface Roughness

Parameter	Mating Surface µm		Groove Surface µm
	Turcite® Materials	Zurcon® Materials	
R_{max}	0.63 - 4.00	1.00 - 4.00	< 16.0
$R_{z\ DIN}$	0.40 - 2.50	0.63 - 2.50	< 10.0
R_a	0.05 - 0.40	0.10 - 0.40	< 2.5

Ordering Example

Slydring® for piston diameter D_N = 100.0 mm
Series GP 69 from Table VIII
Groove width: 9.70 mm, ring thickness: 2.50 mm

Material: Turcite® T47
(other materials see Table I)
Standard design: With angle cut and teardrop structure
Design code: 0

TSS Part No.: GP6901000 (from Table XI)
The TSS Article No. can be formed from the example below.

TSS Article No.	GP69	0	1000	-	T47
TSS Series No.					
Design code, standard					
Bore diameter x 10					
Quality Index (Standard)					
Material No.					

Ordering Example for D_N ≥1000 mm
Slydring® for bore diameter D_N = 2700.0 mm
Series GP75X from Table VIII
Groove width: 25.00 mm, ring thickness: 3.00 mm
TSS Part No.: GP75X2700 (from Table XI)

TSS Article No.	GP75	X	2700	-	T47
TSS Series No.					
Design code					
Bore diameter x 1*					
Quality Index (Standard)					
Material No.					

* For diameters ≥ 1000.0 mm multiply only by factor 1.

Table XI Slydring® for Piston

Dimensions				TSS Part No.
Bore Diameter	Groove Diameter	Groove Width	Thick-ness	
D_N H9	d_2 h8	L_2 +0.2	W	
8.0	4.9	2.5	1.55	GP4100080
10.0	6.9	2.5	1.55	GP4100100
10.0	6.9	4.0	1.55	GP4300100
12.0	8.9	4.0	1.55	GP4300120
14.0	10.9	4.0	1.55	GP4300140
15.0	11.9	4.0	1.55	GP4300150
16.0	**12.9**	**4.0**	**1.55**	**GP4300160**
16.0	**11.0**	**5.6**	**2.50**	**GP6500160**
18.0	14.9	4.0	1.55	GP4300180
18.0	13.0	5.6	2.50	GP6500180
20.0	**16.9**	**4.0**	**1.55**	**GP4300200**
20.0	**15.0**	**5.6**	**2.50**	**GP6500200**

Dimensions				TSS Part No.
Bore Diameter	Groove Diameter	Groove Width	Thick-ness	
D_N H9	d_2 h8	L_2 +0.2	W	
22.0	17.0	5.6	2.50	GP6500220
25.0	**21.9**	**4.0**	**1.55**	**GP4300250**
25.0	**20.0**	**5.6**	**2.50**	**GP6500250**
25.0	20.0	9.7	2.50	GP6900250
27.0	22.0	5.6	2.50	GP6500270
27.0	22.0	9.7	2.50	GP6900270
28.0	23.0	5.6	2.50	GP6500280
30.0	26.9	4.0	1.55	GP4300300
30.0	25.0	5.6	2.50	GP6500300
30.0	25.0	9.7	2.50	GP6900300
32.0	**28.9**	**4.0**	**1.55**	**GP4300320**
32.0	**27.0**	**5.6**	**2.50**	**GP6500320**

Dimensions				TSS Part No.
Bore Diameter	Groove Diameter	Groove Width	Thick-ness	
D_N H9	d_2 h8	L_2 +0.2	W	
32.0	27.0	9.7	2.50	GP6900320
33.0	28.0	5.6	2.50	GP6500330
35.0	30.0	5.6	2.50	GP6500350
35.0	30.0	9.7	2.50	GP6900350
36.0	31.9	4.0	1.55	GP4300360
37.0	32.0	5.6	2.50	GP6500370
37.0	32.0	9.7	2.50	GP6900370
40.0	**36.9**	**4.0**	**1.55**	**GP4300400**
40.0	**35.0**	**5.6**	**2.50**	**GP6500400**
40.0	35.0	9.7	2.50	GP6900400
41.0	36.0	5.6	2.50	GP6500410
41.0	36.0	9.7	2.50	GP6900410
42.0	37.0	5.6	2.50	GP6500420
45.0	40.0	5.6	2.50	GP6500450
45.0	40.0	9.7	2.50	GP6900450
48.0	43.0	5.6	2.50	GP6500480
50.0	**46.9**	**4.0**	**1.55**	**GP4300500**
50.0	**45.0**	**5.6**	**2.50**	**GP6500500**
50.0	45.0	9.7	2.50	GP6900500
52.0	47.0	5.6	2.50	GP6500520
55.0	50.0	5.6	2.50	GP6500550
55.0	50.0	9.7	2.50	GP6900550
60.0	55.0	5.6	2.50	GP6500600
60.0	55.0	9.7	2.50	GP6900600
61.0	56.0	5.6	2.50	GP6500610
62.0	56.0	9.7	2.50	GP6900610
63.0	**58.0**	**5.6**	**2.50**	**GP6500630**
63.0	**58.0**	**9.7**	**2.50**	**GP6900630**
65.0	60.0	5.6	2.50	GP6500650
65.0	60.0	9.7	2.50	GP6900650
68.0	63.0	5.6	2.50	GP6500680
68.0	63.0	9.7	2.50	GP6900680
70.0	65.0	5.6	2.50	GP6500700
70.0	65.0	9.7	2.50	GP6900700
72.0	67.0	5.6	2.50	GP6500720
75.0	70.0	5.6	2.50	GP6500750

Dimensions				TSS Part No.
Bore Diameter	Groove Diameter	Groove Width	Thick-ness	
D_N H9	d_2 h8	L_2 +0.2	W	
75.0	70.0	9.7	2.50	GP6900750
80.0	**75.0**	**5.6**	**2.50**	**GP6500800**
80.0	**75.0**	**9.7**	**2.50**	**GP6900800**
85.0	80.0	5.6	2.50	GP6500850
85.0	80.0	9.7	2.50	GP6900850
90.0	85.0	5.6	2.50	GP6500900
90.0	85.0	9.7	2.50	GP6900900
95.0	90.0	5.6	2.50	GP6500950
95.0	90.0	9.7	2.50	GP6900950
100.0	**95.0**	**5.6**	**2.50**	**GP6501000**
100.0	**95.0**	**9.7**	**2.50**	**GP6901000**
105.0	100.0	5.6	2.50	GP6501050
105.0	100.0	9.7	2.50	GP6901050
110.0	105.0	9.7	2.50	GP6901100
115.0	110.0	9.7	2.50	GP6901150
120.0	115.0	9.7	2.50	GP6901200
125.0	**120.0**	**5.6**	**2.50**	**GP6501250**
125.0	**120.0**	**9.7**	**2.50**	**GP6901250**
130.0	125.0	9.7	2.50	GP6901300
130.0	125.0	15.0	2.50	GP7301300
135.0	130.0	9.7	2.50	GP6901350
135.0	130.0	15.0	2.50	GP7301350
140.0	**135.0**	**9.7**	**2.50**	**GP6901400**
140.0	**135.0**	**15.0**	**2.50**	**GP7301400**
150.0	145.0	15.0	2.50	GP7301500
160.0	**155.0**	**9.7**	**2.50**	**GP6901600**
160.0	**155.0**	**15.0**	**2.50**	**GP7301600**
170.0	165.0	15.0	2.50	GP7301700
180.0	**175.0**	**9.7**	**2.50**	**GP6901800**
180.0	**175.0**	**15.0**	**2.50**	**GP7301800**
190.0	185.0	15.0	2.50	GP7301900
200.0	**195.0**	**9.7**	**2.50**	**GP6902000**
200.0	**195.0**	**15.0**	**2.50**	**GP7302000**
210.0	205.0	15.0	2.50	GP7302100
220.0	**215.0**	**9.7**	**2.50**	**GP6902200**
220.0	**215.0**	**15.0**	**2.50**	**GP7302200**

Dimensions				TSS Part No.
Bore Diameter	Groove Diameter	Groove Width	Thick-ness	
D_N H9	d_2 h8	L_2 +0.2	W	
230.0	225.0	15.0	2.50	GP7302300
240.0	235.0	15.0	2.50	GP7302400
250.0	**245.0**	**9.7**	**2.50**	**GP6902500**
250.0	**245.0**	**15.0**	**2.50**	**GP7302500**
280.0	**275.0**	**15.0**	**2.50**	**GP7302800**
280.0	**275.0**	**25.0**	**2.50**	**GP7502800**
280.0	**272.0**	**25.0**	**4.00**	**GP9802800**
300.0	295.0	15.0	2.50	GP7303000
320.0	**315.0**	**15.0**	**2.50**	**GP7303200**
320.0	**315.0**	**25.0**	**2.50**	**GP7503200**
320.0	**312.0**	**25.0**	**4.00**	**GP9803200**
350.0	345.0	25.0	2.50	GP7503500
360.0	**355.0**	**15.0**	**2.50**	**GP7303600**
360.0	**355.0**	**25.0**	**2.50**	**GP7503600**
360.0	**352.0**	**25.0**	**4.00**	**GP9803600**
400.0	**395.0**	**15.0**	**2.50**	**GP7304000**
400.0	**395.0**	**25.0**	**2.50**	**GP7504000**
400.0	**392.0**	**25.0**	**4.00**	**GP9804000**
450.0	**445.0**	**15.0**	**2.50**	**GP7304500**
450.0	**445.0**	**25.0**	**2.50**	**GP7504500**
450.0	**442.0**	**25.0**	**4.00**	**GP9804500**
500.0	**495.0**	**15.0**	**2.50**	**GP7305000**
500.0	**495.0**	**25.0**	**2.50**	**GP7505000**
500.0	**492.0**	**25.0**	**4.00**	**GP9805000**
1000.0	995.0	25.0	2.50	GP75X1000
2700.0	2695.0	25.0	2.50	GP75X2700

Max. diameter ~ 4200 mm for Turcite® Slydring® in one piece.

Zurcon® Z80 is not available as GP98, GP98X and GP99 (Thickness W=4.0 mm)

All sizes printed in **bold** type conform to ISO 10766 and should be preferred for use.

All intermediate sizes not contained in the table are available.

■ Installation Recommendation, Turcite® and Zurcon® Slydring® for Rod According to ISO 10766 Groove Dimension

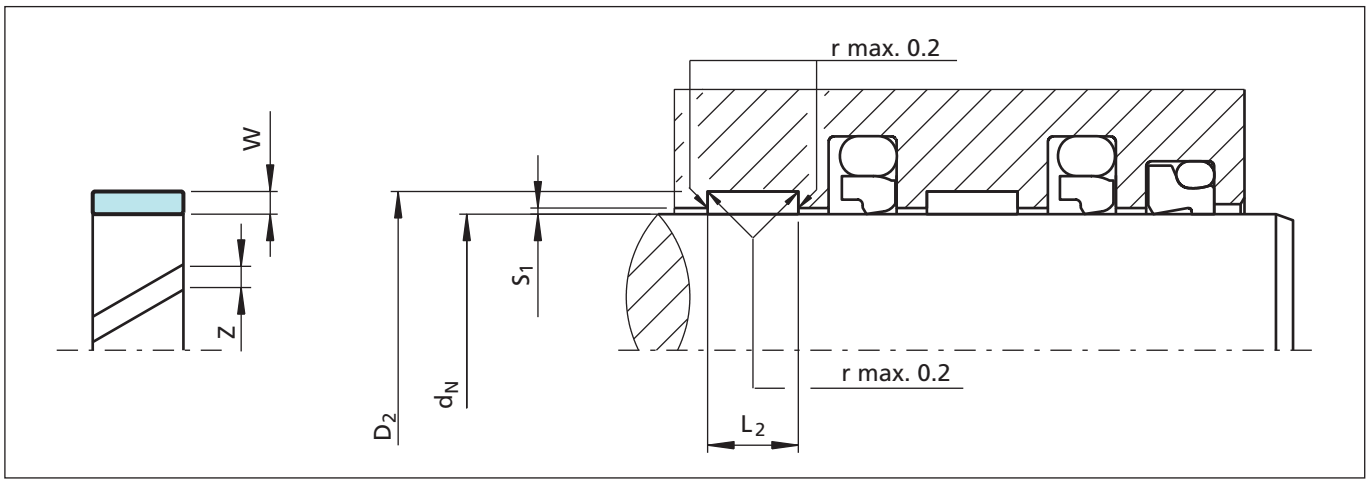

Figure 10 Installation drawing

Table XII Installation dimensions

Serial No.	Rod Diameter[1)]	Groove Diameter	Groove Width	Ring Thickness	Ring Gap
	d_N f8/h9	D_2 H8	L_2 +0.2	W	Z
GR41	8 - 20.0	d_N +3.10	2.50	1.55	[2)]
GR43	10 - 50.0	d_N +3.10	4.00	1.55	[2)]
GR65	15 - 140.0	d_N +5.00	5.60	2.50	[2)]
GR69	20 - 220.0	d_N +5.00	9.70	2.50	[2)]
GR73	80 - 400.0	d_N +5.00	15.00	2.50	[2)]
GR75	200 - 999.9	d_N +5.00	25.00	2.50	[2)]
GR75X	1000 - 4200.0	d_N +5.00	25.00	2.50	[2)]
GR98	280 - 999.9	d_N +8.00	25.00	4.00	[2)]
GR98X	1000 - 2200.0	d_N +8.00	25.00	4.00	[2)]

[1)] Recommended diameter ranges. [2)] Calculation of the linear length, see page 13

For Slydring® to other standards, e.g French standard NF E 48-037, please contact us.

Table XIII Radial Clearance S_1[3)]

Rod Dia. d_N	$S_{1\ min.}$	$S_{1\ max.}$
8 - 20	0.20	0.30
20 - 100	0.25	0.40
101 - 250	0.30	0.60
251 - 500	0.40	0.80
501 - 1000	0.50	1.10
>1001	0.60	1.20

[3)] Specifications valid only in the area of the Slydring®, but not for the seal area. If the radial clearance S for the chosen seals is smaller than $S_{1\ min.}$ there is risk for metal to metal contact.

Table XIV Surface Roughness

Parameter	Mating Surface µm		Groove Surface µm
	Turcite® Materials	Zurcon® Materials	
R_{max}	0.63 - 4.00	1.00 - 4.00	< 16.0
$R_{z\ DIN}$	0.40 - 2.50	0.63 - 2.50	< 10.0
R_a	0.05 - 0.40	0.10 - 0.40	< 2.5

The TSS Article No. can be formed from the example below.

Ordering Example

Slydring® for rod diameter d_N = 63.0 mm
Series GR 65 from Table XII
Groove width: 5.60 mm, ring thickness: 2.50 mm
Material: Turcite® T47 (other materials see Table I)
Standard design: With angle cut and teardrop structure Design code: 0
TSS Part No.: GR6500630 (from Table XV)

TSS Article No. GR65 0 0630 - T47

- TSS Series No.
- Design code, standard
- Rod diameter x 10
- Quality Index (Standard)
- Material No.

Ordering Example for d_N ≥1000 mm

Slydring® for rod diameter d_N = 2600.0 mm
Series GR75X from Table XII
Groove width: 25.00 mm, ring thickness: 2.50 mm

TSS Part No.: GR75X2600 (from Table XV)

TSS Article No. GR75 X 2600 - T47

- TSS Series No.
- Design code
- Rod diameter x 1*
- Quality Index (Standard)
- Material No.

* For diameters ≥ 1000.0 mm multiply only by factor 1.

Table XV Slydring® for Rods

Dimensions				TSS Part No.
Rod Diameter	Groove Diameter	Groove Width	Thick-ness	
d_N f8/h9	D_2 H8	L_2 +0.2	W	
8.0	11.1	2.5	1.55	GR4100080
10.0	13.1	2.5	1.55	GR4100100
10.0	13.1	4.0	1.55	GR4300100
12.0	**15.1**	**4.0**	**1.55**	**GR4300120**
14.0	**17.1**	**4.0**	**1.55**	**GR4300140**
15.0	18.1	4.0	1.55	GR4300150
16.0	**19.1**	**4.0**	**1.55**	**GR4300160**
16.0	21.0	5.6	2.50	GR6500160
18.0	**21.1**	**4.0**	**1.55**	**GR4300180**
18.0	23.0	5.6	2.50	GR6500180
20.0	**23.1**	**4.0**	**1.55**	**GR4300200**
20.0	25.0	5.6	2.50	GR6500200
20.0	25.0	9.7	2.50	GR6900200
22.0	**25.1**	**4.0**	**1.55**	**GR4300220**
22.0	27.0	5.6	2.50	GR6500220

Dimensions				TSS Part No.
Rod Diameter	Groove Diameter	Groove Width	Thick-ness	
d_N f8/h9	D_2 H8	L_2 +0.2	W	
22.0	27.0	9.7	2.50	GR6900220
25.0	**28.1**	**4.0**	**1.55**	**GR4300250**
25.0	**30.0**	**5.6**	**2.50**	**GR6500250**
25.0	30.0	9.7	2.50	GR6900250
27.0	32.0	5.6	2.50	GR6500270
27.0	32.0	9.7	2.50	GR6900270
28.0	**31.1**	**4.0**	**1.55**	**GR4300280**
28.0	**33.0**	**5.6**	**2.50**	**GR6500280**
28.0	33.0	9.7	2.50	**GR6900280**
30.0	35.0	5.6	2.50	GR6500300
30.0	35.0	9.7	2.50	GR6900300
32.0	**37.0**	**5.6**	**2.50**	**GR6500320**
32.0	**37.0**	**9.7**	**2.50**	**GR6900320**
35.0	40.0	5.6	2.50	GR6500350
35.0	40.0	9.7	2.50	GR6900350

Dimensions				TSS Part No.
Rod Diameter	Groove Diameter	Groove Width	Thick-ness	
d_N f8/h9	D_2 H8	L_2 +0.2	W	
36.0	**41.0**	**5.6**	**2.50**	**GR6500360**
36.0	**41.0**	**9.7**	**2.50**	**GR6900360**
40.0	**45.0**	**5.6**	**2.50**	**GR6500400**
40.0	**45.0**	**9.7**	**2.50**	**GR6900400**
40.0	45.0	15.0	2.50	GR7300400
42.0	47.0	5.6	2.50	GR6500420
43.0	48.0	5.6	2.50	GR6500430
45.0	**50.0**	**5.6**	**2.50**	**GR6500450**
45.0	**50.0**	**9.7**	**2.50**	**GR6900450**
48.0	53.0	5.6	2.50	GR6500480
48.0	53.0	9.7	2.50	GR6900480
50.0	**55.0**	**5.6**	**2.50**	**GR6500500**
50.0	**55.0**	**9.7**	**2.50**	**GR6900500**
52.0	57.0	5.6	2.50	GR6500520
52.0	57.0	9.7	2.50	GR6900520
55.0	60.0	5.6	2.50	GR6500550
55.0	60.0	9.7	2.50	GR6900550
56.0	**61.0**	**5.6**	**2.50**	**GR6500560**
56.0	**61.0**	**9.7**	**2.50**	**GR6900560**
58.0	63.0	5.6	2.50	GR6500580
58.0	63.0	9.7	2.50	GR6900580
60.0	65.0	5.6	2.50	GR6500600
60.0	65.0	9.7	2.50	GR6900600
63.0	**68.0**	**5.6**	**2.50**	**GR6500630**
63.0	**68.0**	**9.7**	**2.50**	**GR6900630**
63.0	68.0	15.0	2.50	GR7300630
65.0	70.0	5.6	2.50	GR6500650
65.0	70.0	9.7	2.50	GR6900650
70.0	**75.0**	**5.6**	**2.50**	**GR6500700**
70.0	**75.0**	**9.7**	**2.50**	**GR6900700**
70.0	75.0	15.0	2.50	GR7300700
75.0	80.0	5.6	2.50	GR6500750
75.0	80.0	9.7	2.50	GR6900750
75.0	80.0	15.0	2.50	GR7300750
80.0	85.0	5.6	2.50	GR6500800
80.0	**85.0**	**9.7**	**2.50**	**GR6900800**

Dimensions				TSS Part No.
Rod Diameter	Groove Diameter	Groove Width	Thick-ness	
d_N f8/h9	D_2 H8	L_2 +0.2	W	
80.0	**85.0**	**15.0**	**2.50**	**GR7300800**
85.0	90.0	5.6	2.50	GR6500850
85.0	90.0	9.7	2.50	GR6900850
90.0	95.0	5.6	2.50	GR6500900
90.0	**95.0**	**9.7**	**2.50**	**GR6900900**
90.0	**95.0**	**15.0**	**2.50**	**GR7300900**
95.0	100.0	9.7	2.50	GR6900950
95.0	100.0	15.0	2.50	GR7300950
100.0	105.0	5.6	2.50	GR6501000
100.0	**105.0**	**9.7**	**2.50**	**GR6901000**
100.0	**105.0**	**15.0**	**2.50**	**GR7301000**
105.0	110.0	9.7	2.50	GR6901050
105.0	110.0	15.0	2.50	GR7301050
110.0	**115.0**	**9.7**	**2.50**	**GR6901100**
110.0	**115.0**	**15.0**	**2.50**	**GR7301100**
115.0	120.0	9.7	2.50	GR6901150
115.0	120.0	15.0	2.50	GR7301150
120.0	125.0	5.6	2.50	GR6501200
120.0	125.0	9.7	2.50	GR6901200
120.0	125.0	15.0	2.50	GR7301200
125.0	**130.0**	**9.7**	**2.50**	**GR6901250**
125.0	**130.0**	**15.0**	**2.50**	**GR7301250**
130.0	135.0	15.0	2.50	GR7301300
135.0	140.0	15.0	2.50	GR7301350
140.0	**145.0**	**9.7**	**2.50**	**GR6901400**
140.0	**145.0**	**15.0**	**2.50**	**GR7301400**
150.0	155.0	15.0	2.50	GR7301500
155.0	160.0	15.0	2.50	GR7301550
160.0	**165.0**	**9.7**	**2.50**	**GR6901600**
160.0	**165.0**	**15.0**	**2.50**	**GR7301600**
170.0	175.0	15.0	2.50	GR7301700
180.0	**185.0**	**9.7**	**2.50**	**GR6901800**
180.0	**185.0**	**15.0**	**2.50**	**GR7301800**
190.0	195.0	15.0	2.50	GR7301900
195.0	200.0	15.0	2.50	GR7301950
200.0	**205.0**	**15.0**	**2.50**	**GR7302000**

Turcite® and Zurcon® Slydring® - Wear Ring

Dimensions				TSS Part No.
Rod Diameter	Groove Diameter	Groove Width	Thick-ness	
d_N f8/h9	D_2 H8	L_2 +0.2	W	
200.0	**205.0**	**25.0**	**2.50**	**GR7502000**
210.0	215.0	15.0	2.50	GR7302100
220.0	**225.0**	**15.0**	**2.50**	**GR7302200**
220.0	**225.0**	**25.0**	**2.50**	**GR7502200**
230.0	235.0	25.0	2.50	GR7502300
240.0	245.0	25.0	2.50	GR7502400
250.0	**255.0**	**15.0**	**2.50**	**GR7302500**
250.0	**255.0**	**25.0**	**2.50**	**GR7502500**
280.0	**285.0**	**15.0**	**2.50**	**GR7302800**
280.0	**285.0**	**25.0**	**2.50**	**GR7502800**
280.0	**288.0**	**25.0**	**4.00**	**GR9802800**
300.0	305.0	25.0	2.50	GR7503000
320.0	**325.0**	**15.0**	**2.50**	**GR7303200**
320.0	**325.0**	**25.0**	**2.50**	**GR7503200**
320.0	**328.0**	**25.0**	**4.00**	**GR9803200**
350.0	355.0	25.0	2.50	GR7503500
360.0	**365.0**	**15.0**	**2.50**	**GR7303600**
360.0	**365.0**	**25.0**	**2.50**	**GR7503600**
360.0	**368.0**	**25.0**	**4.00**	**GR9803600**
400.0	405.0	25.0	2.50	GR7504000
400.0	408.0	25.0	4.00	GR9804000
800.0	805.0	25.0	2.50	GR7508000
800.0	808.0	25.0	4.00	GR9808000
1000.0	1005.0	25.0	2.50	GR75X1000
1000.0	1008.0	25.0	4.00	GR98X1000
2600.0	2605.0	25.0	2.50	GR75X2600

Max. diameter ~ 4200 mm for Turcite® Slydring® in one piece.

Zurcon® Z80 is not available as GR98 and GR98X (Thickness W=4.0 mm)

All sizes printed in **bold** type conform to ISO 10766 and should be preferred for use.

All intermediate sizes not contained in the table are available upon request.

■ HiMod® Slydring® for Piston and Rod

Description

HiMod® Slydring® are made in special, modified thermoplastic material and can be used in hydraulic cylinders for medium to high loads. Two different grades of material are available:

HiMod® HM061:	A special glass fibre reinforced polyacetal
HiMod® HM062:	A special glass fibre reinforced heat-stabilised polyamid with PTFE filler

Slydring® in material HM061 and HM062 are injection moulded to finish parts (mould necessary), a wide range of standard sizes (see Table XXI and Table XXXIII) are available.

Application Examples

HiMod® Slydring® (HM061, 062) is generally utilised in a wide range of hydraulic equipment such as:

- Standard hydraulic cylinder, medium range
- Truck tail lift
- Telescopic cylinders
- Truck cranes
- Forklift truck
- Stabiliser cylinders
- Agriculture equipment
- Construction machinery

Materials

HiMod® HM061

HiMod® HM061 is a polyacetal (POM) based material with glass fibres.

Advantages

- Favourable price/performance ratio
- High compressive strength
- Easy installation on pistons and glands (gland bore > 40 mm)
- High wear resistance
- Water absorption 0.2 %
- High stiffness

Technical Data

Velocity, reciprocating:	Max. 0.8 m/s
Temperature:	-40 °C to +110 °C
Radial Slydring® pressure Pr:	Max. 40 N/mm^2 at 25 °C Max. 25 N/mm^2 >60 °C

When calculating the width of HiMod® Slydring® it is recommended to use a safety factor f=2 (see page 8).

Important Note:
The above stated limits for pressure and speed are maximum values individually. Friction heat generated by the combination of pressure and speed may cause local heat built-up. Care should be taken not to apply high values for pressure and speed at the same time.

HiMod® HM062

HM062 is a polyamid (PA 66) based material with glass fibres and PTFE filler. The material is heat stabilised.

Advantages

- Good price/performance ratio
- High compressive strength even at high temperatures
- High wear resistance
- Easy installation on pistons and glands (gland bore > 30 mm)
- Low friction
- For operation under poor lubrication

Technical Data

Velocity, reciprocating:	Max. 1.0 m/s
Temperature:	-40 °C to +130 °C
Radial Slydring® pressure Pr:	Max. 75 N/mm^2 at 60 °C Max. 40 N/mm^2 >60 °C

When calculating the width of HiMod® Slydring® it is recommended to use a safety factor f=2 (see page 8).

Important Note:
The above stated limits for pressure and speed are maximum values individually. Friction heat generated by the combination of pressure and speed may cause local heat built-up. Care should be taken not to apply high values for pressure and speed at the same time.

■ Installation Recommendation, HiMod® Slydring® for Piston According to ISO 10766 Groove Dimension

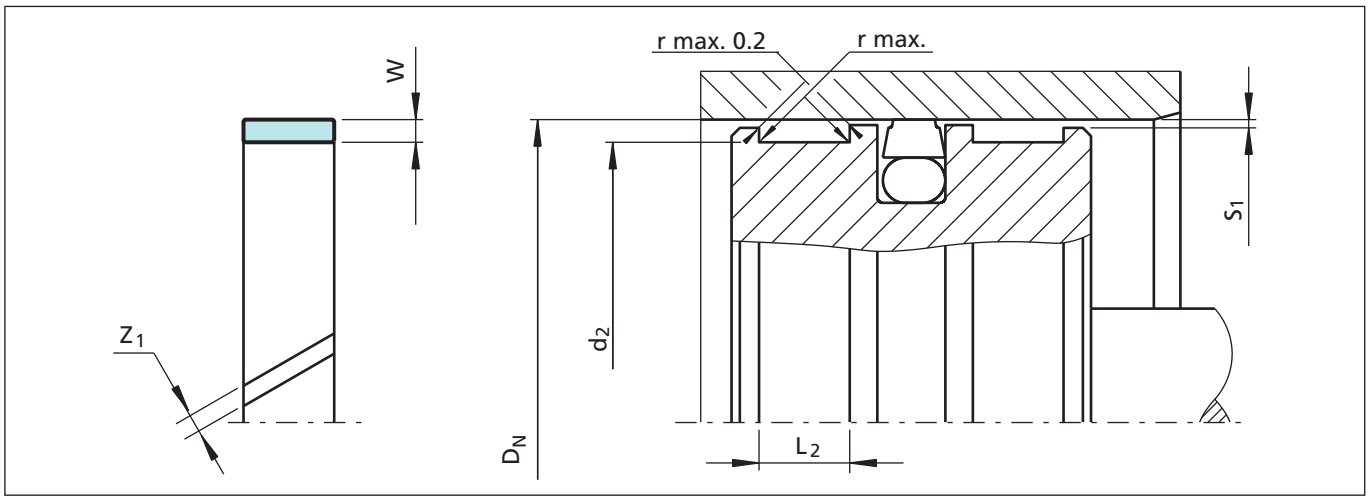

Figure 11 Installation drawing

Table XVI Installation dimensions

Serial No.	Bore Diameter[1)]	Groove Diameter	Groove Width	Ring Thickness
	D_N H9	d_2 h8	L_2 +0.2	W
GP43	10 - 50.0	D_N - 3.10	4.00	1.55
GP65	16 - 140.0	D_N - 5.00	5.60	2.50
GP69	60 - 220.0	D_N - 5.00	9.70	2.50
GP73	130 - 300.0	D_N - 5.00	15.00	2.50
GP75	280 - 300.0	D_N - 5.00	25.00	2.50
GP98	280 - 300.0	D_N - 8.00	25.00	4.00

[1)] Recommended diameter ranges.

For Slydring® to other standards, e.g French standard NF E 48-037, please contact us.

Table XVII Recommended Radii for Groove Dia.

D_N	r max.
8 - 250	0.2
>250	0.4

Table XVIII Radial Clearence S_1[2)]

Bore Dia. D_N	$S_{1\ min.}$	$S_{1\ max.}$
8 - 20	0.20	0.30
20 - 100	0.25	0.40
101 - 250	0.30	0.60
251 - 300	0.40	0.80

[2)] Specifications valid only in the area of the Slydring®, but not for the seal area.

Table XIX Recommended Gap

D_N	Ring Gap Z_1
10 - 44	2 - 2.5
45 - 149	2 -3
>150	3 -4

Table XX Surface Roughness

Parameter	Mating Surface µm	Groove Surface µm
	HiMod® Materials	
R_{max}	1.00 - 4.00	< 16.0
$R_{z\ DIN}$	0.63 - 2.50	< 10.0
R_a	0.10 - 0.40	< 2.5

Ordering Example

Slydring® for bore diameter D_N = 100.0 mm
Series GP69 from Table XVI
Groove width: 9.70 mm, ring thickness: 2.50 mm

Material: HiMod® HM061
(other materials see Table I)
Standard design: With angle cut
Design code: 0

TSS Article No.: GP6901000-HM061 (from Table XXI)

TSS Article No. GP69 0 1000 - HM061

- GP69: TSS Series No.
- 0: Design code, standard
- 1000: Bore diameter x 10
- -: Quality Index (Standard)
- HM061: Material No.

Note

HM062 material can be ordered by replacing the HM061 material code in the TSS Article Number.

Please check with your local TSS entity the availability and price of the HM062. This material may require new moulds.

Table XXI Slydring® for Piston in HM061

Dimensions				TSS Article No.	Polypac Ref. No.
Bore Diameter	Groove Diameter	Groove Width	Thickness		
D_N H9	d_2 h8	L_2 +0.2	W		
12.0	8.9	4.0	1.55	GP4300120-HM061	WR 8.9 12 4
16.0	**12.9**	**4.0**	**1.55**	**GP4300160-HM061**	**WR 12.9 16 4**
20.0	**16.9**	**4.0**	**1.55**	**GP4300200-HM061**	**WR 16.9 20 4**
24.0	20.9	4.0	1.55	GP4300240-HM061	WR 20.9 24 4
25.0	**21.9**	**4.0**	**1.55**	**GP4300250-HM061**	**WR 21.9 25 4**
25.0	**20.0**	**5.6**	**2.50**	**GP6500250-HM061**	**WR 20 25 5.6**
25.0	20.0	9.7	2.50	GP6900250-HM061	WR 20 25 9.7
27.0	22.0	5.6	2.50	GP6500270-HM061	WR 22 27 5.6
27.0	22.0	9.7	2.50	GP6900270-HM061	WR 22 27 9.7
30.0	25.0	5.6	2.50	GP6500300-HM061	WR 25 30 5.6
30.0	25.0	9.7	2.50	GP6900300-HM061	WR 25 30 9.7
32.0	**28.9**	**4.0**	**1.55**	**GP4300320-HM061**	**WR 28.9 32 4**

All sizes printed in **bold** type conform to ISO 10766 and should be preferred for use.

Dimensions				TSS Article No.	Polypac Ref. No.
Bore Diameter	Groove Diameter	Groove Width	Thickness		
D_N H9	d_2 h8	L_2 +0.2	W		
32.0	**27.0**	**5.6**	**2.50**	**GP6500320-HM061**	**WR 27 32 5.6**
32.0	27.0	9.7	2.50	GP6900320-HM061	WR 27 32 9.7
33.0	28.0	5.6	2.50	GP6500330-HM061	WR 28 33 5.6
35.0	30.0	5.6	2.50	GP6500350-HM061	WR 30 35 5.6
35.0	30.0	9.7	2.50	GP6900350-HM061	WR 30 35 9.7
37.0	32.0	5.6	2.50	GP6500370-HM061	WR 32 37 5.6
37.0	32.0	9.7	2.50	GP6900370-HM061	WR 32 37 9.7
40.0	**35.0**	**5.6**	**2.50**	**GP6500400-HM061**	**WR 35 40 5.6**
40.0	35.0	9.7	2.50	GP6900400-HM061	WR 35 40 9.7
41.0	36.0	5.6	2.50	GP6500410-HM061	WR 36 41 5.6
41.0	36.0	9.7	2.50	GP6900410-HM061	WR 36 41 9.7
45.0	40.0	5.6	2.50	GP6500450-HM061	WR 40 45 5.6
45.0	40.0	9.7	2.50	GP6900450-HM061	WR 40 45 9.7
45.0	40.0	15.0	2.50	GP7300450-HM061	WR 40 45 15
50.0	**45.0**	**5.6**	**2.50**	**GP6500500-HM061**	**WR 45 50 5.6**
50.0	45.0	9.7	2.50	GP6900500-HM061	WR 45 50 9.7
50.0	45.0	15.0	2.50	GP7300500-HM061	WR 45 50 15
52.0	47.0	5.6	2.50	GP6500520-HM061	WR 47 52 5.6
55.0	50.0	5.6	2.50	GP6500550-HM061	WR 50 55 5.6
55.0	50.0	9.7	2.50	GP6900550-HM061	WR 50 55 9.7
55.0	50.0	15.0	2.50	GP7300550-HM061	WR 50 55 15
57.0	52.0	5.6	2.50	GP6500570-HM061	WR 52 57 5.6
57.0	52.0	9.7	2.50	GP6900570-HM061	WR 52 57 9.7
58.0	53.0	9.7	2.50	GP6900580-HM061	WR 53 58 9.7
60.0	55.0	5.6	2.50	GP6500600-HM061	WR 55 60 5.6
60.0	55.0	9.7	2.50	GP6900600-HM061	WR 55 60 9.7
61.0	56.0	5.6	2.50	GP6500610-HM061	WR 56 61 5.6
62.0	56.0	9.7	2.50	GP6900610-HM061	WR 56 61 9.7
63.0	**58.0**	**5.6**	**2.50**	**GP6500630-HM061**	**WR 58 63 5.6**
63.0	**58.0**	**9.7**	**2.50**	**GP6900630-HM061**	**WR 58 63 9.7**
65.0	60.0	5.6	2.50	GP6500650-HM061	WR 60 65 5.6
65.0	60.0	9.7	2.50	GP6900650-HM061	WR 60 65 9.7
68.0	63.0	5.6	2.50	GP6500680-HM061	WR 63 68 5.6
68.0	63.0	9.7	2.50	GP6900680-HM061	WR 63 68 9.7
68.0	63.0	15.0	2.50	GP7300680-HM061	WR 63 68 15
70.0	65.0	5.6	2.50	GP6500700-HM061	WR 65 70 5.6

All sizes printed in **bold** type conform to ISO 10766 and should be preferred for use.

HiMod® Slydring® - Wear Ring

Dimensions				TSS Article No.	Polypac Ref. No.
Bore Diameter	Groove Diameter	Groove Width	Thickness		
D_N H9	d_2 h8	L_2 +0.2	W		
70.0	65.0	9.7	2.50	GP6900700-HM061	WR 65 70 9.7
72.0	67.0	5.6	2.50	GP6500720-HM061	WR 67 72 5.6
75.0	70.0	5.6	2.50	GP6500750-HM061	WR 70 75 5.6
75.0	70.0	9.7	2.50	GP6900750-HM061	WR 70 75 9.7
75.0	70.0	15.0	2.50	GP7300750-HM061	WR 70 75 15
80.0	**75.0**	**5.6**	**2.50**	**GP6500800-HM061**	**WR 75 80 5.6**
80.0	**75.0**	**9.7**	**2.50**	**GP6900800-HM061**	**WR 75 80 9.7**
80.0	**75.0**	**15.0**	**2.50**	**GP7300800-HM061**	**WR 75 80 15**
85.0	80.0	5.6	2.50	GP6500850-HM061	WR 80 85 5.6
85.0	80.0	9.7	2.50	GP6900850-HM061	WR 80 85 9.7
85.0	80.0	15.0	2.50	GP7300850-HM061	WR 80 85 15
90.0	85.0	5.6	2.50	GP6500900-HM061	WR 85 90 5.6
90.0	85.0	9.7	2.50	GP6900900-HM061	WR 85 90 9.7
90.0	85.0	15.0	2.50	GP7300900-HM061	WR 85 90 15
95.0	90.0	5.6	2.50	GP6500950-HM061	WR 90 95 5.6
95.0	90.0	9.7	2.50	GP6900950-HM061	WR 90 95 9.7
100.0	**95.0**	**5.6**	**2.50**	**GP6501000-HM061**	**WR 95 100 5.6**
100.0	**95.0**	**9.7**	**2.50**	**GP6901000-HM061**	**WR 95 100 9.7**
100.0	**95.0**	**15.0**	**2.50**	**GP7301000-HM061**	**WR 95 100 15**
105.0	100.0	5.6	2.50	GP6501050-HM061	WR 100 105 5.6
105.0	100.0	9.7	2.50	GP6901050-HM061	WR 100 105 9.7
105.0	100.0	15.0	2.50	GP7301050-HM061	WR 100 105 15
110.0	105.0	9.7	2.50	GP6901100-HM061	WR 105 110 9.7
110.0	105.0	15.0	2.50	GP7301100-HM061	WR 105 110 15
115.0	110.0	9.7	2.50	GP6901150-HM061	WR 110 115 9.7
115.0	110.0	15.0	2.50	GP7301150-HM061	WR 110 115 15
120.0	115.0	9.7	2.50	GP6901200-HM061	WR 115 120 9.7
125.0	**120.0**	**5.6**	**2.50**	**GP6501250-HM061**	**WR 120 125 5.6**
125.0	**120.0**	**9.7**	**2.50**	**GP6901250-HM061**	**WR 120 125 9.7**
125.0	**120.0**	**15.0**	**2.50**	**GP7301250-HM061**	**WR 120 125 15**
130.0	125.0	15.0	2.50	GP7301300-HM061	WR 125 130 15
140.0	**135.0**	**9.7**	**2.50**	**GP6901400-HM061**	**WR 135 140 9.7**
140.0	**135.0**	**15.0**	**2.50**	**GP7301400-HM061**	**WR 135 140 15**
160.0	**155.0**	**9.7**	**2.50**	**GP6901600-HM061**	**WR 155 160 9.7**
160.0	**155.0**	**15.0**	**2.50**	**GP7301600-HM061**	**WR 155 160 15**
200.0	**195.0**	**15.0**	**2.50**	**GP7302000-HM061**	**WR 195 200 15**

All sizes printed in **bold** type conform to ISO 10766 and should be preferred for use.

■ Installation Recommendation, HiMod® Slydring® for Piston Non ISO 10766 Groove Dimension

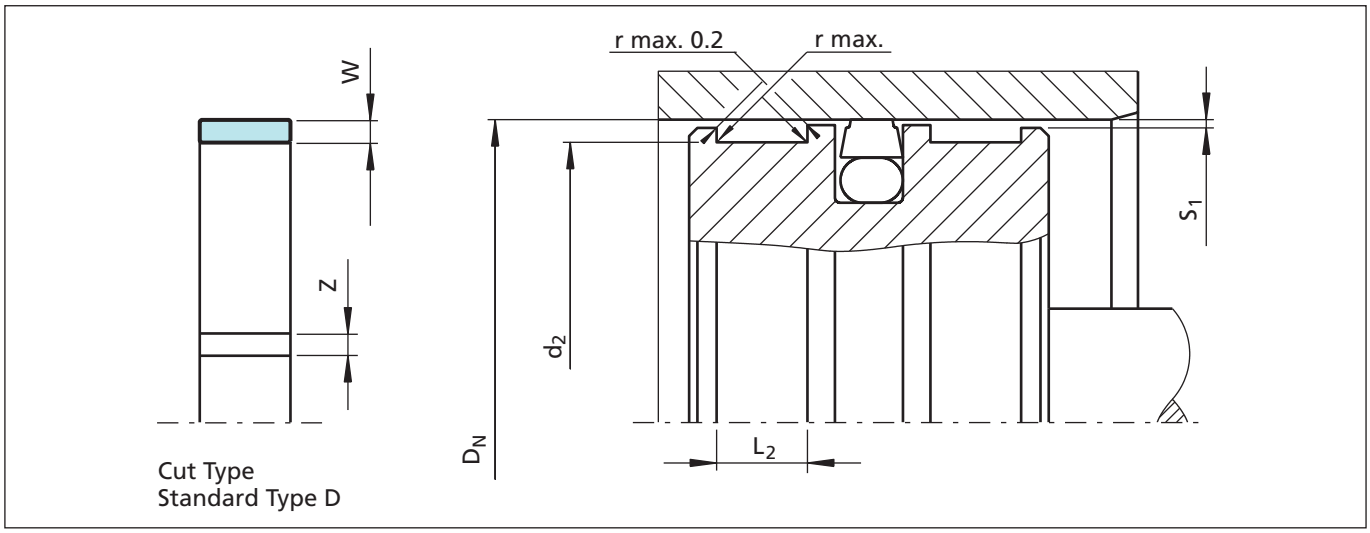

Figure 12 Installation drawing

Table XXII Installation dimensions HiMod® Slydring® for Piston non ISO 10766 Groove Dimensions

Serial No.	Groove Diameter	Groove Width	Ring Thickness
	d_2 h8	L_2 +0.2	W
GP49	D_N - 4.00	9.70	2.00
GP51	D_N - 4.00	10.00	2.00
GP53	D_N - 4.00	15.00	2.00
GP54	D_N - 4.00	20.00	2.00
GP67	D_N - 5.00	6.30	2.50
GP68	D_N - 5.00	8.10	2.50
GP71	D_N - 5.00	10.00	2.50
GPN1	D_N - 6.00	9.70	3.00

Serial No.	Groove Diameter	Groove Width	Ring Thickness
	d_2 h8	L_2 +0.2	W
GP91	D_N - 6.00	10.00	3.00
GP92	D_N - 6.00	12.00	3.00
GPN3	D_N - 6.00	12.80	3.00
GP93	D_N - 6.00	15.00	3.00
GPN4	D_N - 6.00	19.20	3.00
GP94	D_N - 6.00	20.00	3.00
GP95	D_N - 6.00	25.00	3.00
GPL2	D_N - 8.00	15.00	4.00

Table XXIII Recommended Radii for Groove Dia.

d_N	r max.
8 - 250	0.2
>250	0.4

Table XXIV Radial Clearance S_1[2)]

Bore Dia. D_N	$S_{1\ min.}$	$S_{1\ max.}$
8 - 20	0.20	0.30
20 - 100	0.25	0.40
101 - 250	0.30	0.60
251 - 300	0.40	0.80

2) Specifications valid only in the area of the Slydring®, but not for the seal area.

Table XXV Recommended Gap

D_N	Ring Gap Z
16 - 49	1 - 1.5
50 - 154	1.5 - 2.5
>155	2 - 4

Table XXVI Surface Roughness

Parameter	Mating Surface µm	Groove Surface µm
	HiMod® Materials	
R_{max}	1.00 - 4.00	< 16.0
$R_{z\ DIN}$	0.63 - 2.50	< 10.0
R_a	0.10 - 0.40	< 2.5

Ordering Example

For Polypac Slydring® Ref. No. E/DWR 20/2
Bore diameter D_N = 20.0 mm
Groove width: 9.70 mm, ring thickness: 2.00 mm

Material: HM061
Standard design: With straight cut
Design code: D

TSS Article No. GP49 D 0200 - HM061

- GP49 — TSS Series No.
- D — Design code, standard
- 0200 — Bore diameter x 10
- - — Quality Index (Standard)
- HM061 — Material No.

Note

HM062 material can be ordered by replacing the HM061 material code in the TSS Article Number.

Please check with your local TSS entity the availability and price of the HM062. This material may require new moulds.

Table XXVII Slydring® for Piston in HM061

Dimensions				TSS Article No.	Polypac Ref. No.
Bore Diameter	Groove Diameter	Groove Width	Thickness		
D_N H11	d_2 h9	L_2 +0.2	W		
16.0	12.0	9.7	2.00	GP49D0160-HM061	E/DWR 16/2-9.6
18.0	14.0	9.7	2.00	GP49D0180-HM061	E/DWR 18/2-9.6
20.0	16.0	9.7	2.00	GP49D0200-HM061	E/DWR 20/2-9.6
22.0	18.0	9.7	2.00	GP49D0220-HM061	E/DWR 22/2-9.6
24.0	20.0	9.7	2.00	GP49D0240-HM061	E/DWR 24/2-9.6
25.0	21.0	9.7	2.00	GP49D0250-HM061	E/DWR 25/2-9.6
26.0	22.0	9.7	2.00	GP49D0260-HM061	E/DWR 26/2-9.6
27.0	23.0	9.7	2.00	GP49D0270-HM061	E/DWR 27/2-9.6
28.0	24.0	9.7	2.00	GP49D0280-HM061	E/DWR 28/2-9.6
29.0	25.0	9.7	2.00	GP49D0290-HM061	E/DWR 29/2-9.6
30.0	26.0	9.7	2.00	GP49D0300-HM061	E/DWR 30/2-9.6
32.0	28.0	9.7	2.00	GP49D0320-HM061	E/DWR 32/2-9.6
33.0	29.0	9.7	2.00	GP49D0330-HM061	E/DWR 33/2-9.6
34.0	30.0	9.7	2.00	GP49D0340-HM061	E/DWR 34/2-9.6
35.0	31.0	9.7	2.00	GP49D0350-HM061	E/DWR 35/2-9.6

Dimensions				TSS Article No.	Polypac Ref. No.
Bore Diameter	Groove Diameter	Groove Width	Thickness		
D_N H11	d_2 h9	L_2 +0.2	W		
35.0	29.0	9.7	3.00	GPN1D0350-HM061	E/DWR 35/3-9.6
36.0	32.0	9.7	2.00	GP49D0360-HM061	E/DWR 36/2-9.6
38.0	34.0	9.7	2.00	GP49D0380-HM061	E/DWR 38/2-9.6
39.0	35.0	9.7	2.00	GP49D0390-HM061	E/DWR 39/2-9.6
39.0	35.0	12.8	2.00	GPN3D0390-HM061	E/DWR 39/2-12.8
39.0	33.0	9.7	3.00	GPN1D0390-HM061	E/DWR 39/3-9.6
40.0	36.0	9.7	2.00	GP49D0400-HM061	E/DWR 40/2-9.6
40.0	34.0	9.7	3.00	GPN1D0400-HM061	E/DWR 40/3-9.6
42.0	38.0	9.7	2.00	GP49D0420-HM061	E/DWR 42/2-9.6
44.0	40.0	9.7	2.00	GP49D0440-HM061	E/DWR 44/2-9.6
44.0	38.0	9.7	3.00	GPN1D0440-HM061	E/DWR 44/3-9.6
45.0	41.0	9.7	2.00	GP49D0450-HM061	E/DWR 45/2-9.6
45.0	39.0	9.7	3.00	GPN1D0450-HM061	E/DWR 45/3-9.6
46.0	40.0	9.7	3.00	GPN1D0460-HM061	E/DWR 46/3-9.6
48.0	42.0	9.7	3.00	GPN1D0480-HM061	E/DWR 48/3-9.6
48.0	42.0	12.8	3.00	GPN3D0480-HM061	E/DWR 48/3-12.8
49.0	45.0	9.7	2.00	GP49D0490-HM061	E/DWR 49/2-9.6
49.0	43.0	9.7	3.00	GPN1D0490-HM061	E/DWR 49/3-9.6
50.0	44.0	9.7	3.00	GPN1D0500-HM061	E/DWR 50/3-9.6
50.0	44.0	12.8	3.00	GPN3D0500-HM061	E/DWR 50/3-12.8
52.0	46.0	12.8	3.00	GPN3D0520-HM061	E/DWR 52/3-12.8
53.0	47.0	9.7	3.00	GPN1D0530-HM061	E/DWR 53/3-9.6
54.0	48.0	12.8	3.00	GPN3D0540-HM061	E/DWR 54/3-12.8
55.0	51.0	9.7	2.00	GP49D0550-HM061	E/DWR 55/2-9.6
55.0	49.0	9.7	3.00	GPN1D0550-HM061	E/DWR 55/3-9.6
55.0	49.0	12.8	3.00	GPN3D0550-HM061	E/DWR 55/3-12.8
56.0	50.0	12.8	3.00	GPN3D0560-HM061	E/DWR 56/3-12.8
57.0	51.0	12.8	3.00	GPN3D0570-HM061	E/DWR 57/3-12.8
59.0	55.0	9.7	2.00	GP49D0590-HM061	E/DWR 59/2-9.6
60.0	56.0	9.7	2.00	GP49D0600-HM061	E/DWR 60/2-9.6
60.0	54.0	12.8	3.00	GPN3D0600-HM061	E/DWR 60/3-12.8
62.0	56.0	12.8	3.00	GPN3D0620-HM061	E/DWR 62/3-12.8
63.0	57.0	12.8	3.00	GPN3D0630-HM061	E/DWR 63/3-12.8
65.0	61.0	9.7	2.00	GP49D0650-HM061	E/DWR 65/2-9.6
65.0	59.0	12.8	3.00	GPN3D0650-HM061	E/DWR 65/3-12.8
67.0	61.0	12.8	3.00	GPN3D0670-HM061	E/DWR 67/3-12.8

HiMod® Slydring® - Wear Ring

Dimensions				TSS Article No.	Polypac Ref. No.
Bore Diameter	Groove Diameter	Groove Width	Thickness		
D_N H11	d_2 h9	L_2 +0.2	W		
68.0	62.0	12.8	3.00	GPN3D0680-HM061	E/DWR 68/3-12.8
70.0	64.0	12.8	3.00	GPN3D0700-HM061	E/DWR 70/3-12.8
71.0	65.0	12.8	3.00	GPN3D0710-HM061	E/DWR 71/3-12.8
72.0	66.0	12.8	3.00	GPN3D0720-HM061	E/DWR 72/3-12.8
74.0	70.0	9.7	2.00	GP49D0740-HM061	E/DWR 74/2-9.6
74.0	68.0	12.8	3.00	GPN3D0740-HM061	E/DWR 74/3-12.8
75.0	69.0	12.8	3.00	GPN3D0750-HM061	E/DWR 75/3-12.8
76.0	70.0	12.8	3.00	GPN3D0760-HM061	E/DWR 76/3-12.8
77.0	71.0	12.8	3.00	GPN3D0770-HM061	E/DWR 77/3-12.8
80.0	74.0	12.8	3.00	GPN3D0800-HM061	E/DWR 80/3-12.8
83.0	77.0	12.8	3.00	GPN3D0830-HM061	E/DWR 83/3-12.8
84.0	78.0	12.8	3.00	GPN3D0840-HM061	E/DWR 84/3-12.8
85.0	79.0	12.8	3.00	GPN3D0850-HM061	E/DWR 85/3-12.8
88.0	82.0	12.8	3.00	GPN3D0880-HM061	E/DWR 88/3-12.8
89.0	83.0	12.8	3.00	GPN3D0890-HM061	E/DWR 89/3-12.8
90.0	84.0	12.8	3.00	GPN3D0900-HM061	E/DWR 90/3-12.8
91.0	85.0	12.8	3.00	GPN3D0910-HM061	E/DWR 91/3-12.8
92.0	86.0	12.8	3.00	GPN3D0920-HM061	E/DWR 92/3-12.8
93.0	87.0	12.8	3.00	GPN3D0930-HM061	E/DWR 93/3-12.8
94.0	88.0	12.8	3.00	GPN3D0940-HM061	E/DWR 94/3-12.8
95.0	89.0	12.8	3.00	GPN3D0950-HM061	E/DWR 95/3-12.8
100.0	94.0	9.7	3.00	GPN1D1000-HM061	E/DWR 100/3-9.6
100.0	94.0	12.8	3.00	GPN3D1000-HM061	E/DWR 100/3-12.8
102.0	96.0	12.8	3.00	GPN3D1020-HM061	E/DWR 102/3-12.8
104.0	98.0	12.8	3.00	GPN3D1040-HM061	E/DWR 104/3-12.8
105.0	99.0	12.8	3.00	GPN3D1050-HM061	E/DWR 105/3-12.8
105.0	99.0	19.2	3.00	GPN4D1050-HM061	E/DWR 105/3-19.2
108.0	102.0	12.8	3.00	GPN3D1080-HM061	E/DWR 108/3-12.8
110.0	104.0	12.8	3.00	GPN3D1100-HM061	E/DWR 110/3-12.8
112.0	106.0	19.2	3.00	GPN4D1120-HM061	E/DWR 112/3-19.2
115.0	109.0	12.8	3.00	GPN3D1150-HM061	E/DWR 115/3-12.8
115.0	109.0	19.2	3.00	GPN4D1150-HM061	E/DWR 115/3-19.2
116.0	110.0	12.8	3.00	GPN3D1160-HM061	E/DWR 116/3-12.8
116.0	110.0	19.2	3.00	GPN4D1160-HM061	E/DWR 116/3-19.2
118.0	112.0	12.8	3.00	GPN3D1180-HM061	E/DWR 118/3-12.8
120.0	114.0	12.8	3.00	GPN3D1200-HM061	E/DWR 120/3-12.8

Dimensions				TSS Article No.	Polypac Ref. No.
Bore Diameter	Groove Diameter	Groove Width	Thickness		
D_N H11	d_2 h9	L_2 +0.2	W		
121.0	115.0	12.8	3.00	GPN3D1210-HM061	E/DWR 121/3-12.8
123.0	117.0	12.8	3.00	GPN3D1230-HM061	E/DWR 123/3-12.8
125.0	119.0	12.8	3.00	GPN3D1250-HM061	E/DWR 125/3-12.8
125.0	119.0	19.2	3.00	GPN4D1250-HM061	E/DWR 125/3-19.2
126.0	120.0	12.8	3.00	GPN3D1260-HM061	E/DWR 126/3-12.8
127.0	121.0	12.8	3.00	GPN3D1270-HM061	E/DWR 127/3-12.8
130.0	124.0	12.8	3.00	GPN3D1300-HM061	E/DWR 130/3-12.8
130.0	124.0	19.2	3.00	GPN4D1300-HM061	E/DWR 130/3-19.2
133.0	127.0	12.8	3.00	GPN3D1330-HM061	E/DWR 133/3-12.8
135.0	129.0	12.8	3.00	GPN3D1350-HM061	E/DWR 135/3-12.8
135.0	129.0	19.2	3.00	GPN4D1350-HM061	E/DWR 135/3-19.2
140.0	134.0	12.8	3.00	GPN3D1400-HM061	E/DWR 140/3-12.8
140.0	134.0	19.2	3.00	GPN4D1400-HM061	E/DWR 140/3-19.2
145.0	139.0	12.8	3.00	GPN3D1450-HM061	E/DWR 145/3-12.8
145.0	139.0	19.2	3.00	GPN4D1450-HM061	E/DWR 145/3-19.2
146.0	140.0	12.8	3.00	GPN3D1460-HM061	E/DWR 146/3-12.8
147.0	141.0	12.8	3.00	GPN3D1470-HM061	E/DWR 147/3-12.8
150.0	144.0	12.8	3.00	GPN3D1500-HM061	E/DWR 150/3-12.8
150.0	144.0	19.2	3.00	GPN4D1500-HM061	E/DWR 150/3-19.2
151.0	145.0	12.8	3.00	GPN3D1510-HM061	E/DWR 151/3-12.8
152.0	146.0	19.2	3.00	GPN4D1520-HM061	E/DWR 152/3-19.2
153.0	147.0	19.2	3.00	GPN4D1530-HM061	E/DWR 153/3-19.2
154.0	148.0	19.2	3.00	GPN4D1540-HM061	E/DWR 154/3-19.2
155.0	149.0	19.2	3.00	GPN4D1550-HM061	E/DWR 155/3-19.2
158.0	152.0	19.2	3.00	GPN4D1580-HM061	E/DWR 158/3-19.2
160.0	154.0	19.2	3.00	GPN4D1600-HM061	E/DWR 160/3-19.2
165.0	159.0	19.2	3.00	GPN4D1650-HM061	E/DWR 165/3-19.2
168.0	162.0	12.8	3.00	GPN3D1680-HM061	E/DWR 168/3-12.8
168.0	162.0	19.2	3.00	GPN4D1680-HM061	E/DWR 168/3-19.2
170.0	164.0	19.2	3.00	GPN4D1700-HM061	E/DWR 170/3-19.2
172.0	166.0	19.2	3.00	GPN4D1720-HM061	E/DWR 172/3-19.2
175.0	169.0	19.2	3.00	GPN4D1750-HM061	E/DWR 175/3-19.2
180.0	174.0	19.2	3.00	GPN4D1800-HM061	E/DWR 180/3-19.2
181.0	175.0	19.2	3.00	GPN4D1810-HM061	E/DWR 181/3-19.2
185.0	179.0	19.2	3.00	GPN4D1850-HM061	E/DWR 185/3-19.2
189.0	183.0	19.2	3.00	GPN4D1890-HM061	E/DWR 189/3-19.2

HiMod® Slydring® - Wear Ring

Dimensions				TSS Article No.	Polypac Ref. No.
Bore Diameter	Groove Diameter	Groove Width	Thickness		
D_N H11	d_2 h9	L_2 +0.2	W		
190.0	184.0	19.2	3.00	GPN4D1900-HM061	E/DWR 190/3-19.2
192.0	186.0	19.2	3.00	GPN4D1920-HM061	E/DWR 192/3-19.2
195.0	189.0	19.2	3.00	GPN4D1950-HM061	E/DWR 195/3-19.2
200.0	194.0	19.2	3.00	GPN4D2000-HM061	E/DWR 200/3-19.2
205.0	199.0	19.2	3.00	GPN4D2050-HM061	E/DWR 205/3-19.2
210.0	204.0	19.2	3.00	GPN4D2100-HM061	E/DWR 210/3-19.2
215.0	209.0	19.2	3.00	GPN4D2150-HM061	E/DWR 215/3-19.2
217.0	211.0	19.2	3.00	GPN4D2170-HM061	E/DWR 217/3-19.2
220.0	214.0	19.2	3.00	GPN4D2200-HM061	E/DWR 220/3-19.2
225.0	219.0	19.2	3.00	GPN4D2250-HM061	E/DWR 225/3-19.2
230.0	224.0	19.2	3.00	GPN4D2300-HM061	E/DWR 230/3-19.2
235.0	229.0	19.2	3.00	GPN4D2350-HM061	E/DWR 235/3-19.2
237.0	231.0	19.2	3.00	GPN4D2370-HM061	E/DWR 237/3-19.2
240.0	234.0	19.2	3.00	GPN4D2400-HM061	E/DWR 240/3-19.2
245.0	239.0	19.2	3.00	GPN4D2450-HM061	E/DWR 245/3-19.2
250.0	244.0	19.2	3.00	GPN4D2500-HM061	E/DWR 250/3-19.2
254.0	248.0	19.2	3.00	GPN4D2540-HM061	E/DWR 254/3-19.2
255.0	249.0	19.2	3.00	GPN4D2550-HM061	E/DWR 255/3-19.2
260.0	254.0	19.2	3.00	GPN4D2600-HM061	E/DWR 260/3-19.2
265.0	259.0	19.2	3.00	GPN4D2650-HM061	E/DWR 265/3-19.2
270.0	264.0	19.2	3.00	GPN4D2700-HM061	E/DWR 270/3-19.2
275.0	269.0	19.2	3.00	GPN4D2750-HM061	E/DWR 275/3-19.2
280.0	274.0	19.2	3.00	GPN4D2800-HM061	E/DWR 280/3-19.2
285.0	279.0	19.2	3.00	GPN4D2850-HM061	E/DWR 285/3-19.2
290.0	284.0	19.2	3.00	GPN4D2900-HM061	E/DWR 290/3-19.2
295.0	289.0	19.2	3.00	GPN4D2950-HM061	E/DWR 295/3-19.2
300.0	294.0	19.2	3.00	GPN4D3000-HM061	E/DWR 300/3-19.2

■ Installation Recommendation, HiMod® Slydring® for Rod According to ISO 10766 Groove Dimension

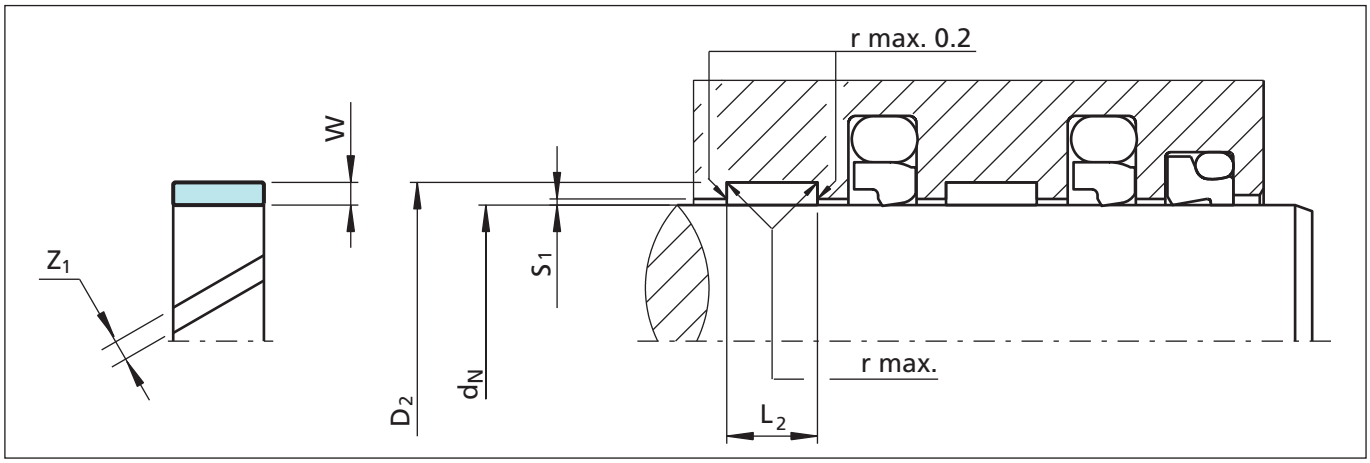

Figure 13 Installation drawing

Table XXVIII Installation dimensions

Series No.	Rod Diameter[1)]	Groove Diameter	Groove Width	Ring Thickness
	d_N f8/h9	D_2 H8	L_2 +0.2	W
GR43	10 - 50.0	d_N + 3.10	4.00	1.55
GR65	15 - 140.0	d_N + 5.00	5.60	2.50
GR69	20 - 220.0	d_N + 5.00	9.70	2.50
GR73	80 - 300.0	d_N + 5.00	15.00	2.50
GR75	200 - 300.0	d_N + 5.00	25.00	2.50
GR98	280 - 300.0	d_N + 8.00	25.00	4.00

[1)] Recommended diameter ranges

For Slydring® to other standards, e.g French standard NF E 48-037, please contact us.

Table XXIX Recommended Radii for Groove Dia.

D_N	r max.
8 - 250	0.2
>250	0.4

Table XXX Radial Clearance S_1 [2)]

Rod Dia. d_N	$S_{1\ min.}$	$S_{1\ max.}$
8 - 20	0.20	0.30
20 - 100	0.25	0.40
101 - 250	0.30	0.60
251 - 300	0.40	0.80

[2)] Specifications valid only in the area of the Slydring®, but not for the seal area.

Table XXXI Recommended Gap

D_N	Ring Gap Z_1
10 - 39	2 - 2.5
40 - 149	2 - 3
>150	3 - 4

Table XXXII Surface Roughness

Parameter	Mating Surface µm	Groove Surface µm
	HiMod® Materials	
R_{max}	1.00 - 4.00	< 16.0
$R_{z\ DIN}$	0.63 - 2.50	< 10.0
R_a	0.10 - 0.40	< 2.5

Ordering Example

Slydring® for rod diameter d_N = 63.0 mm
Series GR69 from Table XXVIII
Groove width: 9.70 mm, ring thickness: 2.50 mm

Material:	HiMod® HM061 (other materials see Table I)
Standard design:	With angle cut Design code: 0
TSS Article No.:	GR6900630-HM061 (from Table XXXIII)

TSS Article No. GR69 0 0630 - HM061

- GR69: TSS Series No.
- 0: Design code, standard
- 0630: Rod diameter x 10
- -: Quality Index (Standard)
- HM061: Material No.

Note

HM062 material can be ordered by replacing the HM061 material code in the TSS Article Number.

Please check with your local TSS entity the availability and price of the HM062. This material may require new moulds.

Table XXXIII Slydring® for Rods in HM061

Dimensions				TSS Article No.	Polypac Ref. No.
Rod Diameter	Groove Diameter	Groove Width	Thickness		
d_N f8/h9	D_2 H8	L_2 +0.2	W		
20.0	**23.1**	**4.0**	**1.55**	**GR4300200-HM061**	**WR 20 23.1 4**
20.0	25.0	5.6	2.50	GR6500200-HM061	WR 20 25 5.6
20.0	25.0	9.7	2.50	GR6900200-HM061	WR 20 25 9.7
22.0	27.0	5.6	2.50	GR6500220-HM061	WR 22 27 5.6
22.0	27.0	9.7	2.50	GR6900220-HM061	WR 22 27 9.7
25.0	**28.1**	**4.0**	**1.55**	**GR4300250-HM061**	**WR 25 28.1 4**
25.0	**30.0**	**5.6**	**2.50**	**GR6500250-HM061**	**WR 25 30 5.6**
25.0	30.0	9.7	2.50	GR6900250-HM061	WR 25 30 9.7
27.0	32.0	5.6	2.50	GR6500270-HM061	WR 27 32 5.6

All sizes printed in **bold** type conform to ISO 10766 and should be preferred for use.

HiMod® Slydring® - Wear Ring

Dimensions				TSS Article No.	Polypac Ref. No.
Rod Diameter	Groove Diameter	Groove Width	Thickness		
d_N f8/h9	D_2 H8	L_2 +0.2	W		
27.0	32.0	9.7	2.50	GR6900270-HM061	WR 27 32 9.7
28.0	**33.0**	**5.6**	**2.50**	**GR6500280-HM061**	**WR 28 33 5.6**
30.0	35.0	5.6	2.50	GR6500300-HM061	WR 30 35 5.6
30.0	35.0	9.7	2.50	GR6900300-HM061	WR 30 35 9.7
32.0	**37.0**	**5.6**	**2.50**	**GR6500320-HM061**	**WR 32 37 5.6**
32.0	**37.0**	**9.7**	**2.50**	**GR6900320-HM061**	**WR 32 37 9.7**
35.0	40.0	5.6	2.50	GR6500350-HM061	WR 35 40 5.6
35.0	40.0	9.7	2.50	GR6900350-HM061	WR 35 40 9.7
36.0	**41.0**	**5.6**	**2.50**	**GR6500360-HM061**	**WR 36 41 5.6**
36.0	**41.0**	**9.7**	**2.50**	**GR6900360-HM061**	**WR 36 41 9.7**
40.0	**45.0**	**5.6**	**2.50**	**GR6500400-HM061**	**WR 40 45 5.6**
40.0	**45.0**	**9.7**	**2.50**	**GR6900400-HM061**	**WR 40 45 9.7**
40.0	45.0	15.0	2.50	GR7300400-HM061	WR 40 45 15
45.0	**50.0**	**5.6**	**2.50**	**GR6500450-HM061**	**WR 45 50 5.6**
45.0	**50.0**	**9.7**	**2.50**	**GR6900450-HM061**	**WR 45 50 9.7**
45.0	50.0	15.0	2.50	GR7300450-HM061	WR 45 50 15
47.0	52.0	5.6	2.50	GR6500470-HM061	WR 47 52 5.6
50.0	**55.0**	**5.6**	**2.50**	**GR6500500-HM061**	**WR 50 55 5.6**
50.0	**55.0**	**9.7**	**2.50**	**GR6900500-HM061**	**WR 50 55 9.7**
50.0	55.0	15.0	2.50	GR7300500-HM061	WR 50 55 15
52.0	57.0	5.6	2.50	GR6500520-HM061	WR 52 57 5.6
52.0	57.0	9.7	2.50	GR6900520-HM061	WR 52 57 9.7
53.0	58.0	9.7	2.50	GR6900530-HM061	WR 53 58 9.7
55.0	60.0	5.6	2.50	GR6500550-HM061	WR 55 60 5.6
55.0	60.0	9.7	2.50	GR6900550-HM061	WR 55 60 9.7
56.0	**61.0**	**5.6**	**2.50**	**GR6500560-HM061**	**WR 56 61 5.6**
56.0	**61.0**	**9.7**	**2.50**	**GR6900560-HM061**	**WR 56 61 9.7**
58.0	63.0	5.6	2.50	GR6500580-HM061	WR 58 63 5.6
58.0	63.0	9.7	2.50	GR6900580-HM061	WR 58 63 9.7
60.0	65.0	5.6	2.50	GR6500600-HM061	WR 60 65 5.6
60.0	65.0	9.7	2.50	GR6900600-HM061	WR 60 65 9.7
63.0	**68.0**	**5.6**	**2.50**	**GR6500630-HM061**	**WR 63 68 5.6**
63.0	**68.0**	**9.7**	**2.50**	**GR6900630-HM061**	**WR 63 68 9.7**
63.0	68.0	15.0	2.50	GR7300630-HM061	ER 63 68 15
65.0	70.0	5.6	2.50	GR6500650-HM061	WR 65 70 5.6
65.0	70.0	9.7	2.50	GR6900650-HM061	WR 65 70 9.7

All sizes printed in **bold** type conform to ISO 10766 and should be preferred for use.

Dimensions				TSS Article No.	Polypac Ref. No.
Rod Diameter	Groove Diameter	Groove Width	Thickness		
d_N f8/h9	D_2 H8	L_2 +0.2	W		
67.0	72.0	5.6	2.50	GR6500670-HM061	WR 67 72 5.6
70.0	**75.0**	**5.6**	**2.50**	**GR6500700-HM061**	**WR 70 75 5.6**
70.0	**75.0**	**9.7**	**2.50**	**GR6900700-HM061**	**WR 70 75 9.7**
70.0	75.0	15.0	2.50	GR7300700-HM061	WR 70 75 15
75.0	80.0	5.6	2.50	GR6500750-HM061	WR 75 80 5.6
75.0	80.0	9.7	2.50	GR6900750-HM061	WR 75 80 9.7
75.0	80.0	15.0	2.50	GR7300750-HM061	WR 75 80 15
80.0	85.0	5.6	2.50	GR6500800-HM061	WR 80 85 5.6
80.0	**85.0**	**9.7**	**2.50**	**GR6900800-HM061**	**WR 80 85 9.7**
80.0	**85.0**	**15.0**	**2.50**	**GR7300800-HM061**	**WR 80 85 15**
85.0	90.0	5.6	2.50	GR6500850-HM061	WR 85 90 5.6
85.0	90.0	9.7	2.50	GR6900850-HM061	WR 85 90 9.7
85.0	90.0	15.0	2.50	GR7300850-HM061	WR 85 90 15
90.0	95.0	5.6	2.50	GR6500900-HM061	WR 90 95 5.6
90.0	**95.0**	**9.7**	**2.50**	**GR6900900-HM061**	**WR 90 95 9.7**
92.0	97.0	25.0	2.50	GR7500920-HM061	WR 92 97 25
95.0	100.0	5.6	2.50	GR6500950-HM061	WR 95 100 5.6
95.0	100.0	9.7	2.50	GR6900950-HM061	WR 95 100 9.7
95.0	100.0	15.0	2.50	GR7300950-HM061	WR 95 100 15
100.0	105.0	5.6	2.50	GR6501000-HM061	WR 100 105 5.6
100.0	**105.0**	**9.7**	**2.50**	**GR6901000-HM061**	**WR 100 105 9.7**
100.0	**105.0**	**15.0**	**2.50**	**GR7301000-HM061**	**WR 100 105 15**
105.0	110.0	9.7	2.50	GR6901050-HM061	WR 105 110 9.7
105.0	110.0	15.0	2.50	GR7301050-HM061	WR 105 110 15
110.0	**115.0**	**9.7**	**2.50**	**GR6901100-HM061**	**WR 110 115 9.7**
110.0	**115.0**	**15.0**	**2.50**	**GR7301100-HM061**	**WR 110 115 15**
115.0	120.0	9.7	2.50	GR6901150-HM061	WR 115 120 9.7
120.0	125.0	5.6	2.50	GR6501200-HM061	WR 120 125 5.6
120.0	125.0	9.7	2.50	GR6901200-HM061	WR 120 125 9.7
120.0	125.0	15.0	2.50	GR7301200-HM061	WR 120 125 15
125.0	**130.0**	**15.0**	**2.50**	**GR7301250-HM061**	**WR 125 130 15**
135.0	140.0	9.7	2.50	GR6901350-HM061	WR 135 140 9.7
135.0	140.0	15.0	2.50	GR7301350-HM061	WR 135 140 15
155.0	160.0	15.0	2.50	GR7301550-HM061	WR 155 160 15
195.0	200.0	15.0	2.50	GR7301950-HM061	WR 195 200 15

All sizes printed in **bold** type conform to ISO 10766 and should be preferred for use.

■ Installation Recommendation, HiMod® Slydring® for Rod Non ISO 10766 Groove Dimension

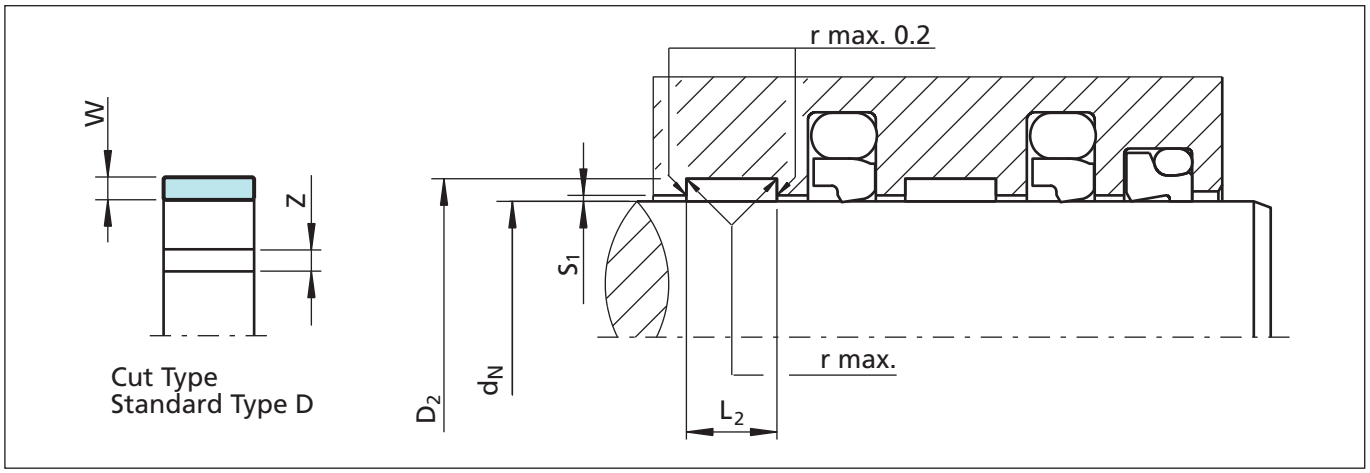

Figure 14 Installation drawing

Table XXXIV Installation dimensions HiMod® Slydring® for Rod non ISO 10766 Groove Dimensions

Serial No.	Groove Diameter	Groove Width	Ring Thickness
	D_2 H8	L_2 +0.2	W
GR48	d_N + 4.00	8.10	2.00
GR49	d_N + 4.00	9.70	2.00
GR51	d_N + 4.00	10.00	2.00
GRN5	d_N + 4.00	12.80	2.00
GR53	d_N + 4.00	15.00	2.00
GR54	d_N + 4.00	20.00	2.00
GRN1	d_N + 6.00	9.70	3.00
GR91	d_N + 6.00	10.00	3.00

Serial No.	Groove Diameter	Groove Width	Ring Thickness
	D_2 H8	L_2 +0.2	W
GR92	d_N + 6.00	12.00	3.00
GRN3	d_N + 6.00	12.80	3.00
GRN4	d_N + 6.00	19.20	3.00
GR94	d_N + 6.00	20.00	3.00
GR95	d_N + 6.00	25.00	3.00
GR96	d_N + 6.00	30.00	3.00
GRL5	d_N + 8.00	30.00	4.00

Table XXXV Recommended Radii for Groove Dia.

D_N	r max.
8 - 250	0.2
>250	0.4

Table XXXVI Radial Clearance S_1 [2)]

Rod Dia. d_N	$S_{1\ min.}$	$S_{1\ max.}$
8 - 20	0.20	0.30
20 - 100	0.25	0.40
101 - 250	0.30	0.60
251 - 500	0.40	0.80
501 - 1000	0.50	1.10
>1001	0.60	1.20

[2)] Specifications valid only in the area of the Slydring®, but not for the seal area.

Table XXXVII Recommended Gap

d_N	Ring Gap Z
12 - 40	1 - 1.5
41 - 149	1.5 - 2.5
>150	2 - 4

Table XXXVIII Surface Roughness

Parameter	Mating Surface µm	Groove Surface µm
	HiMod® Materials	
R_{max}	1.00 - 4.00	< 16.0
$R_{z\ DIN}$	0.63 - 2.50	< 10.0
R_a	0.10 - 0.40	< 2.5

For Polypac Slydring® Ref. No. I/DWR 40/2
Rod diameter d_N = 40.0 mm
Groove width: 9.70 mm, ring thickness: 2.00 mm

Material: HM061
(other materials see Table I)
Standard design: With straight cut
Design code: D

Note

HM062 material can be ordered by replacing the HM061 material code in the TSS Article Number.

Please check with your local TSS entity the availability and price of the HM062. This material may require new moulds.

Ordering Example

TSS Article No. GR49 D 0400 - HM061

- GR49 — TSS Series No.
- D — Design code, standard
- 0400 — Rod diameter x 10
- - — Quality Index (Standard)
- HM061 — Material No.

Table XXXIX Slydring® for Rod in HM061

Dimensions				TSS Article No.	Polypac Ref. No.
Rod Diameter	Groove Diameter	Groove Width	Thickness		
d_N h11	D_2 H8	L_2 +0.2	W		
12.0	16.0	9.7	2.00	GR49D0120-HM061	I/DWR 12/2-9.6
14.0	18.0	9.7	2.00	GR49D0140-HM061	I/DWR 14/2-9.6
15.0	19.0	9.7	2.00	GR49D0150-HM061	I/DWR 15/2-9.6
16.0	20.0	9.7	2.00	GR49D0160-HM061	I/DWR 16/2-9.6
18.0	22.0	9.7	2.00	GR49D0180-HM061	I/DWR 18/2-9.6
20.0	24.0	9.7	2.00	GR49D0200-HM061	I/DWR 20/2-9.6
22.0	26.0	9.7	2.00	GR49D0220-HM061	I/DWR 22/2-9.6
24.0	28.0	9.7	2.00	GR49D0240-HM061	I/DWR 24/2-9.6
25.0	29.0	9.7	2.00	GR49D0250-HM061	I/DWR 25/2-9.6
26.0	30.0	9.7	2.00	GR49D0260-HM061	I/DWR 26/2-9.6
27.0	31.0	9.7	2.00	GR49D0270-HM061	I/DWR 27/2-9.6
28.0	32.0	9.7	2.00	GR49D0280-HM061	I/DWR 28/2-9.6

Dimensions				TSS Article No.	Polypac Ref. No.
Rod Diameter	Groove Diameter	Groove Width	Thickness		
d_N h11	D_2 H8	L_2 +0.2	W		
30.0	34.0	9.7	2.00	GR49D0300-HM061	I/DWR 30/2-9.6
30.0	36.0	9.7	3.00	GRN1D0300-HM061	I/DWR 30/3-9.6
31.0	35.0	9.7	2.00	GR49D0310-HM061	I/DWR 31/2-9.6
32.0	36.0	9.7	2.00	GR49D0320-HM061	I/DWR 32/2-9.6
34.0	38.0	9.7	2.00	GR49D0340-HM061	I/DWR 34/2-9.6
35.0	39.0	9.7	2.00	GR49D0350-HM061	I/DWR 35/2-9.6
35.0	41.0	9.7	3.00	GRN1D0350-HM061	I/DWR 35/3-9.6
35.0	39.0	12.8	2.00	GRN5D0350-HM061	I/DWR 35/2-12.8
36.0	40.0	9.7	2.00	GR49D0360-HM061	I/DWR 36/2-9.6
36.0	42.0	9.7	3.00	GRN1D0360-HM061	I/DWR 36/3-9.6
37.0	41.0	9.7	2.00	GR49D0370-HM061	I/DWR 37/2-9.6
38.0	42.0	9.7	2.00	GR49D0380-HM061	I/DWR 38/2-9.6
40.0	44.0	9.7	2.00	GR49D0400-HM061	I/DWR 40/2-9.6
40.0	46.0	9.7	3.00	GRN1D0400-HM061	I/DWR 40/3-9.6
40.0	46.0	12.8	3.00	GRN3D0400-HM061	I/DWR 40/3-12.8
42.0	46.0	9.7	2.00	GR49D0420-HM061	I/DWR 42/2-9.6
42.0	48.0	9.7	3.00	GRN1D0420-HM061	I/DWR 42/3-9.6
44.0	50.0	9.7	3.00	GRN1D0440-HM061	I/DWR 44/3-9.6
45.0	51.0	9.7	3.00	GRN1D0450-HM061	I/DWR 45/3-9.6
45.0	51.0	12.8	3.00	GRN3D0450-HM061	I/DWR 45/3-12.8
46.0	50.0	9.7	2.00	GR49D0460-HM061	I/DWR 46/2-9.6
46.0	52.0	9.7	3.00	GRN1D0460-HM061	I/DWR 46/3-9.6
47.0	53.0	9.7	3.00	GRN1D0470-HM061	I/DWR 47/3-9.6
48.0	54.0	9.7	3.00	GRN1D0480-HM061	I/DWR 48/3-9.6
48.0	52.0	12.8	2.00	GRN5D0480-HM061	I/DWR 48/2-12.8
50.0	54.0	9.7	2.00	GR49D0500-HM061	I/DWR 50/2-9.6
50.0	56.0	9.7	3.00	GRN1D0500-HM061	I/DWR 50/3-9.6
50.0	56.0	12.8	3.00	GRN3D0500-HM061	I/DWR 50/3-12.8
52.0	58.0	9.7	3.00	GRN1D0520-HM061	I/DWR 52/3-9.6
53.0	59.0	9.7	3.00	GRN1D0530-HM061	I/DWR 53/3-9.6
54.0	60.0	9.7	3.00	GRN1D0540-HM061	I/DWR 54/3-9.6
54.0	60.0	12.8	3.00	GRN3D0540-HM061	I/DWR 54/3-12.8
55.0	59.0	9.7	2.00	GR49D0550-HM061	I/DWR 55/2-9.6
55.0	61.0	9.7	3.00	GRN1D0550-HM061	I/DWR 55/3-9.6
55.0	61.0	12.8	3.00	GRN3D0550-HM061	I/DWR 55/3-12.8
56.0	62.0	9.7	3.00	GRN1D0560-HM061	I/DWR 56/3-9.6

HiMod® Slydring® - Wear Ring

Dimensions				TSS Article No.	Polypac Ref. No.
Rod Diameter	Groove Diameter	Groove Width	Thickness		
d_N h11	D_2 H8	L_2 +0.2	W		
56.0	62.0	12.8	3.00	GRN3D0560-HM061	I/DWR 56/3-12.8
58.0	64.0	12.8	3.00	GRN3D0580-HM061	I/DWR 58/3-12.8
60.0	64.0	9.7	2.00	GR49D0600-HM061	I/DWR 60/2-9.6
60.0	66.0	9.7	3.00	GRN1D0600-HM061	I/DWR 60/3-9.6
60.0	66.0	12.8	3.00	GRN3D0600-HM061	I/DWR 60/3-12.8
61.0	67.0	12.8	3.00	GRN3D0610-HM061	I/DWR 61/3-12.8
62.0	68.0	12.8	3.00	GRN3D0620-HM061	I/DWR 62/3-12.8
63.0	69.0	12.8	3.00	GRN3D0630-HM061	I/DWR 63/3-12.8
65.0	71.0	12.8	3.00	GRN3D0650-HM061	I/DWR 65/3-12.8
66.0	72.0	12.8	3.00	GRN3D0660-HM061	I/DWR 66/3-12.8
67.0	73.0	12.8	3.00	GRN3D0670-HM061	I/DWR 67/3-12.8
69.0	75.0	12.8	3.00	GRN3D0690-HM061	I/DWR 69/3-12.8
70.0	76.0	12.8	3.00	GRN3D0700-HM061	I/DWR 70/3-12.8
70.0	76.0	19.2	3.00	GRN4D0700-HM061	I/DWR 70/3-19.2
72.0	78.0	12.8	3.00	GRN3D0720-HM061	I/DWR 72/3-12.8
73.0	79.0	12.8	3.00	GRN3D0730-HM061	I/DWR 73/3-12.8
75.0	81.0	12.8	3.00	GRN3D0750-HM061	I/DWR 75/3-12.8
75.0	81.0	19.2	3.00	GRN4D0750-HM061	I/DWR 75/3-19.2
76.0	82.0	12.8	3.00	GRN3D0760-HM061	I/DWR 76/3-12.8
78.0	84.0	12.8	3.00	GRN3D0780-HM061	I/DWR 78/3-12.8
79.0	85.0	12.8	3.00	GRN3D0790-HM061	I/DWR 79/3-12.8
80.0	86.0	12.8	3.00	GRN3D0800-HM061	I/DWR 80/3-12.8
80.0	86.0	19.2	3.00	GRN4D0800-HM061	I/DWR 80/3-19.2
82.0	88.0	12.8	3.00	GRN3D0820-HM061	I/DWR 82/3-12.8
84.0	90.0	12.8	3.00	GRN3D0840-HM061	I/DWR 84/3-12.8
85.0	91.0	12.8	3.00	GRN3D0850-HM061	I/DWR 85/3-12.8
85.0	91.0	19.2	3.00	GRN4D0850-HM061	I/DWR 85/3-19.2
86.0	92.0	12.8	3.00	GRN3D0860-HM061	I/DWR 86/3-12.8
88.0	94.0	12.8	3.00	GRN3D0880-HM061	I/DWR 88/3-12.8
90.0	96.0	12.8	3.00	GRN3D0900-HM061	I/DWR 90/3-12.8
90.0	96.0	19.2	3.00	GRN4D0900-HM061	I/DWR 90/3-19.2
91.0	97.0	12.8	3.00	GRN3D0910-HM061	I/DWR 91/3-12.8
92.0	98.0	12.8	3.00	GRN3D0920-HM061	I/DWR 92/3-12.8
93.0	99.0	12.8	3.00	GRN3D0930-HM061	I/DWR 93/3-12.8
95.0	101.0	12.8	3.00	GRN3D0950-HM061	I/DWR 95/3-12.8
95.0	101.0	19.2	3.00	GRN4D0950-HM061	I/DWR 95/3-19.2

Dimensions				TSS Article No.	Polypac Ref. No.
Rod Diameter	Groove Diameter	Groove Width	Thickness		
d_N h11	D_2 H8	L_2 +0.2	W		
96.0	102.0	12.8	3.00	GRN3D0960-HM061	I/DWR 96/3-12.8
97.0	103.0	12.8	3.00	GRN3D0970-HM061	I/DWR 97/3-12.8
98.0	104.0	12.8	3.00	GRN3D0980-HM061	I/DWR 98/3-12.8
99.0	105.0	12.8	3.00	GRN3D0990-HM061	I/DWR 99/3-12.8
99.0	105.0	19.2	3.00	GRN4D0990-HM061	I/DWR 99/3-19.2
100.0	106.0	12.8	3.00	GRN3D1000-HM061	I/DWR 100/3-12.8
100.0	106.0	19.2	3.00	GRN4D1000-HM061	I/DWR 100/3-19.2
101.0	107.0	12.8	3.00	GRN3D1010-HM061	I/DWR 101/3-12.8
105.0	111.0	12.8	3.00	GRN3D1050-HM061	I/DWR 105/3-12.8
105.0	111.0	19.2	3.00	GRN4D1050-HM061	I/DWR 105/3-19.2
106.0	112.0	19.2	3.00	GRN4D1060-HM061	I/DWR 106/3-19.2
107.0	113.0	12.8	3.00	GRN3D1070-HM061	I/DWR 107/3-12.8
109.0	115.0	12.8	3.00	GRN3D1090-HM061	I/DWR 109/3-12.8
110.0	116.0	12.8	3.00	GRN3D1100-HM061	I/DWR 110/3-12.8
113.0	119.0	12.8	3.00	GRN3D1130-HM061	I/DWR 113/3-12.8
115.0	121.0	12.8	3.00	GRN3D1150-HM061	I/DWR 115/3-12.8
115.0	121.0	19.2	3.00	GRN4D1150-HM061	I/DWR 115/3-19.2
117.0	123.0	12.8	3.00	GRN3D1170-HM061	I/DWR 117/3-12.8
118.0	124.0	12.8	3.00	GRN3D1180-HM061	I/DWR 118/3-12.8
120.0	126.0	12.8	3.00	GRN3D1200-HM061	I/DWR 120/3-12.8
120.0	126.0	19.2	3.00	GRN4D1200-HM061	I/DWR 120/3-19.2
123.0	129.0	12.8	3.00	GRN3D1230-HM061	I/DWR 123/3-12.8
125.0	131.0	12.8	3.00	GRN3D1250-HM061	I/DWR 125/3-12.8
125.0	131.0	19.2	3.00	GRN4D1250-HM061	I/DWR 125/3-19.2
126.0	132.0	12.8	3.00	GRN3D1260-HM061	I/DWR 126/3-12.8
127.0	133.0	12.8	3.00	GRN3D1270-HM061	I/DWR 127/3-12.8
129.0	135.0	19.2	3.00	GRN4D1290-HM061	I/DWR 129/3-19.2
130.0	136.0	12.8	3.00	GRN3D1300-HM061	I/DWR 130/3-12.8
131.0	137.0	12.8	3.00	GRN3D1310-HM061	I/DWR 131/3-12.8
132.0	138.0	12.8	3.00	GRN3D1320-HM061	I/DWR 132/3-12.8
135.0	141.0	12.8	3.00	GRN3D1350-HM061	I/DWR 135/3-12.8
138.0	144.0	12.8	3.00	GRN3D1380-HM061	I/DWR 138/3-12.8
139.0	145.0	19.2	3.00	GRN4D1390-HM061	I/DWR 139/3-19.2
140.0	146.0	12.8	3.00	GRN3D1400-HM061	I/DWR 140/3-12.8
141.0	147.0	12.0	3.00	GR92D1410-HM061	I/DWR 141/3-12.0
141.0	147.0	12.8	3.00	GRN3D1410-HM061	I/DWR 141/3-12.8

Dimensions				TSS Article No.	Polypac Ref. No.
Rod Diameter	Groove Diameter	Groove Width	Thickness		
d_N h11	D_2 H8	L_2 +0.2	W		
141.0	147.0	19.2	3.00	GRN4D1410-HM061	I/DWR 141/3-19.2
142.0	148.0	12.8	3.00	GRN3D1420-HM061	I/DWR 142/3-12.8
143.0	149.0	12.8	3.00	GRN3D1430-HM061	I/DWR 143/3-12.8
145.0	151.0	12.8	3.00	GRN3D1450-HM061	I/DWR 145/3-12.8
145.0	151.0	19.2	3.00	GRN4D1450-HM061	I/DWR 145/3-19.2
148.0	154.0	12.8	3.00	GRN3D1480-HM061	I/DWR 148/3-12.8
150.0	156.0	12.8	3.00	GRN3D1500-HM061	I/DWR 150/3-12.8
150.0	156.0	19.2	3.00	GRN4D1500-HM061	I/DWR 150/3-19.2
152.0	158.0	12.8	3.00	GRN3D1520-HM061	I/DWR 152/3-12.8
152.0	158.0	19.2	3.00	GRN4D1520-HM061	I/DWR 152/3-19.2
154.0	160.0	19.2	3.00	GRN4D1540-HM061	I/DWR 154/3-19.2
155.0	161.0	19.2	3.00	GRN4D1550-HM061	I/DWR 155/3-19.2
160.0	166.0	19.2	3.00	GRN4D1600-HM061	I/DWR 160/3-19.2
162.0	168.0	19.2	3.00	GRN4D1620-HM061	I/DWR 162/3-19.2
163.0	169.0	19.2	3.00	GRN4D1630-HM061	I/DWR 163/3-19.2
165.0	171.0	19.2	3.00	GRN4D1650-HM061	I/DWR 165/3-19.2
170.0	176.0	19.2	3.00	GRN4D1700-HM061	I/DWR 170/3-19.2
173.0	179.0	19.2	3.00	GRN4D1730-HM061	I/DWR 173/3-19.2
175.0	181.0	19.2	3.00	GRN4D1750-HM061	I/DWR 175/3-19.2
180.0	186.0	12.8	3.00	GRN3D1800-HM061	I/DWR 180/3-12.8
180.0	186.0	19.2	3.00	GRN4D1800-HM061	I/DWR 180/3-19.2
183.0	189.0	19.2	3.00	GRN4D1830-HM061	I/DWR 183/3-19.2
184.0	190.0	19.2	3.00	GRN4D1840-HM061	I/DWR 184/3-19.2
185.0	191.0	19.2	3.00	GRN4D1850-HM061	I/DWR 185/3-19.2
190.0	196.0	19.2	3.00	GRN4D1900-HM061	I/DWR 190/3-19.2
195.0	201.0	19.2	3.00	GRN4D1950-HM061	I/DWR 195/3-19.2
196.0	202.0	19.2	3.00	GRN4D1960-HM061	I/DWR 196/3-19.2
198.0	204.0	19.2	3.00	GRN4D1980-HM061	I/DWR 198/3-19.2
200.0	206.0	19.2	3.00	GRN4D2000-HM061	I/DWR 200/3-19.2
205.0	211.0	19.2	3.00	GRN4D2050-HM061	I/DWR 205/3-19.2
210.0	216.0	19.2	3.00	GRN4D2100-HM061	I/DWR 210/3-19.2
215.0	221.0	19.2	3.00	GRN4D2150-HM061	I/DWR 215/3-19.2
220.0	226.0	19.2	3.00	GRN4D2200-HM061	I/DWR 220/3-19.2
225.0	231.0	19.2	3.00	GRN4D2250-HM061	I/DWR 225/3-19.2
230.0	236.0	19.2	3.00	GRN4D2300-HM061	I/DWR 230/3-19.2
231.0	237.0	19.2	3.00	GRN4D2310-HM061	I/DWR 231/3-19.2

Dimensions				TSS Article No.	Polypac Ref. No.
Rod Diameter	Groove Diameter	Groove Width	Thickness		
d_N h11	D_2 H8	L_2 +0.2	W		
235.0	241.0	19.2	3.00	GRN4D2350-HM061	I/DWR 235/3-19.2
240.0	246.0	19.2	3.00	GRN4D2400-HM061	I/DWR 240/3-19.2
245.0	251.0	19.2	3.00	GRN4D2450-HM061	I/DWR 245/3-19.2
248.0	254.0	19.2	3.00	GRN4D2480-HM061	I/DWR 248/3-19.2
250.0	256.0	19.2	3.00	GRN4D2500-HM061	I/DWR 250/3-19.2
254.0	260.0	19.2	3.00	GRN4D2540-HM061	I/DWR 254/3-19.2
255.0	261.0	19.2	3.00	GRN4D2550-HM061	I/DWR 255/3-19.2
260.0	266.0	19.2	3.00	GRN4D2600-HM061	I/DWR 260/3-19.2
265.0	271.0	19.2	3.00	GRN4D2650-HM061	I/DWR 265/3-19.2
270.0	276.0	19.2	3.00	GRN4D2700-HM061	I/DWR 270/3-19.2
275.0	281.0	19.2	3.00	GRN4D2750-HM061	I/DWR 275/3-19.2
280.0	286.0	19.2	3.00	GRN4D2800-HM061	I/DWR 280/3-19.2
285.0	291.0	19.2	3.00	GRN4D2850-HM061	I/DWR 285/3-19.2
290.0	296.0	19.2	3.00	GRN4D2900-HM061	I/DWR 290/3-19.2
295.0	301.0	19.2	3.00	GRN4D2950-HM061	I/DWR 295/3-19.2
300.0	306.0	19.2	3.00	GRN4D3000-HM061	I/DWR 300/3-19.2

■ Orkot® Slydring® for Piston and Rod

Description

Orkot® Slydring® of fabric reinforced composite materials is used in hydraulic cylinders exposed to high loads that can occur e.g. in mobile hydraulics and presses. The high compressive strength, good sliding behaviour and the exceptional wear resistant properties ensure a long service life.

Slydring® of Orkot® fabric composite materials is produced as standard preformed to the intended diameter and ready-to-fit. It is manufactured with a angle cut and already has the necessary gap "Z1".

For large diameters > 300 mm, rings can be cut from Orkot® C320, C380 strip material. This offers economical solutions for non-standard diameters or when quantities are limited. Strip material is coiled to a diameter of 200 to 300 mm and can be ordered either:

- cut and finished to length observing the minimum gap stated in figure 17 (page 49) and figure 19 (page 57).
- coils at full lengths of 2 m, 3 m or 5 m (see next page)

When cut from a coil it requires more care in fitting, in particular if the diameter is below 200 to 300 mm.

Advantages

- Dimensionally stable and vibration absorbing
- Even distribution of high radial forces
- Good sliding and dry running properties
- High wear resistance
- Good wiping effect
- Long service life.

Application Examples

Orkot® Slydring is widely used as a bearing element for heavy duty hydraulic equipment:

- Hydraulic actuators
- Mobile hydraulics
- Excavators
- Construction equipment
- Forrestry machinery
- Mining
- Steel mills
- Presses
- Water locks
- Marine engineering

Technical Data

Velocity:	Up to 1 m/s, with reciprocating movements
Temperature:	- 60 °C to + 120 °C
Pr under dynamic conditions (C380, C320, C932):	max. 100 N/mm^2 at 25 °C max. 50 N/mm^2 >60 °C
Ultimate compressive strength (C380, C320):	max. > 300 N/ mm^2
(C932):	max. 260 N/mm^2

When calculating the width of Orkot® Slydring® it is recommended to use a safety factor f=2 (see page 8).

Important Note:
The above stated limits for pressure and speed are maximum values individually. Friction heat generated by the combination of pressure and speed may cause local heat built-up. Care should be taken not to apply high values for pressure and speed at the same time.

Materials

Orkot® C320

Orkot® C320 is a fabric composite material made of a thermosetting polymer, reinforced by a fine plastic mesh and lubricant additives impregnated throughout the material. It has a very high resistance to wear, good dry-running properties and dampens vibrations.
Colour: dark gray.

Orkot® C380

Orkot C380 is the standard material, this turquoise coloured composite is a further development of the proven C320. It is most versatile; suitable for all commonly used hydraulic fluids such as mineral or synthetic oils, as well as water based fluids. It is an excellent electrical insulator and features enhanced sliding properties in various media.

Orkot® C932

A composite of phenolic resin impregnated into a fine cotton fabric. The material stiffness is higher than C380 / C320. The use in water based fluids is not recommended.
Colour: yellow-brown.

Table XL Serial Numbers for Orkot® Slydring®, ready-to-fit

Piston Serial No.	Rod Serial No.	Groove Width	Ring Thickness
GP41	GR41	2.5	1.55
GP43	**GR43**	**4.0**	**1.55**
GP47	GR47	6.3	1.55
GP48	GR48	8.1	2.00
GP49	GR49	9.7	2.00
GP51	GR51	10.0	2.00
GP53	GR53	15.0	2.00
GP64	GR64	4.2	2.50
GP65	**GR65**	**5.6**	**2.50**
GP67	GR67	6.3	2.50
GP68	GR68	8.1	2.50
GP69	**GR69**	**9.7**	**2.50**
GP73	**GR73**	**15.0**	**2.50**
GP74	GR74	20.0	2.50
GP75	**GR75**	**25.0**	**2.50**
GP76	GR76	30.0	2.50
GP77	GR77	35.0	2.50
GP93	GR93	15.0	3.00
GP94	GR94	20.0	3.00
GP95	GR95	25.0	3.00
GP96	GR96	30.0	3.00
GP99	GR99	9.7	4.00
GPL2	GRL2	15.0	4.00
GPL3	GRL3	20.0	4.00
GP98	**GR98**	**25.0**	**4.00**
GPL5	GRL5	30.0	4.00
GPL7	GRL7	40.0	4.00
GPL9	GRL9	50.0	4.00

Note that customer specific sizes can be supplied without tooling costs.

Table XLI Serial Numbers for Orkot® Slydring®, Coiled Strip, to be cut to length

Serial Number	Coiled length	Groove Width	Ring Thickness
GM65A0000-C380	2 m	5.6	2.50
GM69A0000-C380	2 m	9.7	2.50
GM69A3000-C380	3 m	9.7	2.50
GM69A5000-C380	5 m	9.7	2.50
GM73A0000-C380	2 m	15.0	2.50
GM73A3000-C380	3 m	15.0	2.50
GM73A5000-C380	5 m	15.0	2.50
GM74A0000-C380	2 m	20.0	2.50
GM74A3000-C380	3 m	20.0	2.50
GM74A5000-C380	5 m	20.0	2.50
GM75A0000-C380	2 m	25.0	2.50
GM75A3000-C380	3 m	25.0	2.50
GM75A5000-C380	5 m	25.0	2.50
GM76A0000-C380	2 m	30.0	2.50
GM78A5000-C380	5 m	40.0	2.50
GM95A0000-C380	2 m	25.0	3.00
GM95A5000-C380	5 m	25.0	3.00
GM98A0000-C380	2 m *	25.0	4.00
GM98A3000-C380	3 m *	25.0	4.00
GM98A5000-C380	5 m *	25.0	4.00
GML7A3000-C380	3 m *	40.0	4.00
GML7A5000-C380	5 m *	40.0	4.00

Coils have an inside diameter of approximately 200 mm
* 4 mm strip is coiled at 700 mm diam. approximately

Installation Recommendation

In order to protect the seal and guide system against ingress of foreign particles, we recommend the use of Turcite® Slydring® in combination with Orkot® Slydring®. The larger face area of these rings (Series GP 99 from Table IV) embeds the contaminant particles when present in the system and keeps them away from the actual guides and seals (Figure 15). Reducing the piston diameter at both ends allows the particles to become embedded on the face side.

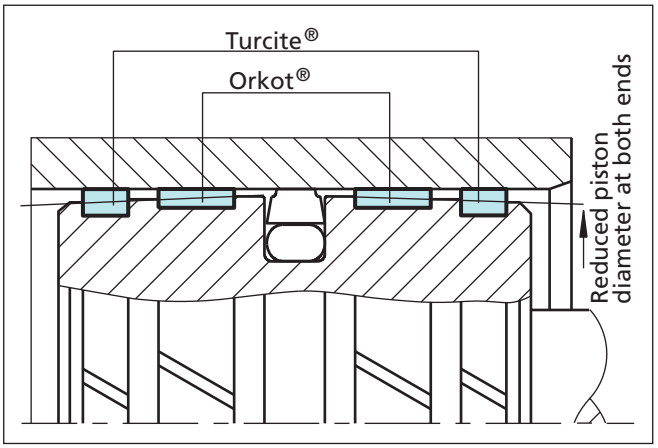

Figure 15 Arrangement of the Slydring® on the piston

■ Installation Recommendation, Orkot® Slydring® for Piston According to ISO 10766 Groove Dimension

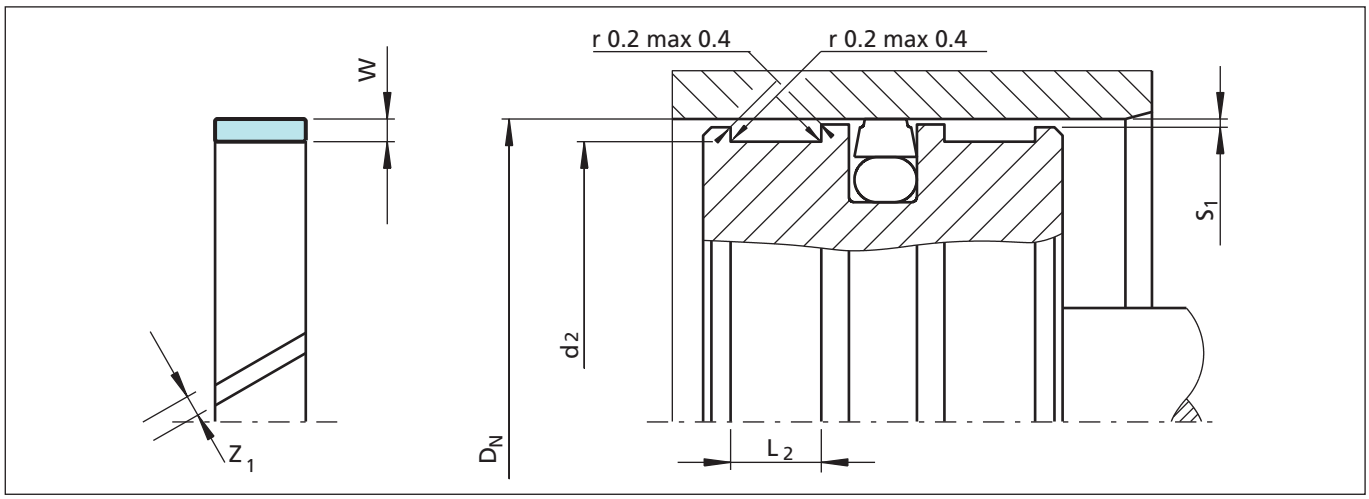

Figure 16 Installation drawing

Table XLII Installation dimensions

Serial No.	Bore Diameter[1)]	Groove Diameter	Groove Width	Ring Thickness	Ring Gap[2)]
	D_N H9	d_2 h8	L_2 +0.2	W	Z_1
GP43	16 - 50.0	D_N - 3.10	4.00	1.55	1 - 3
GP65	16 - 125.0	D_N - 5.00	5.60	2.50	2 - 6
GP69	25 - 250.0	D_N - 5.00	9.70	2.50	2 - 9
GP73	80 - 500.0	D_N - 5.00	15.00	2.50	4 - 17
GP75	125 - 999.9	D_N - 5.00	25.00	2.50	6 - 33
GP75X	1000 - 1500.0	D_N - 5.00	25.00	2.50	33 - 48
GP98	280 - 999.9	D_N - 8.00	25.00	4.00	10 - 33
GP98X	1000 - 1500.0	D_N - 8.00	25.00	4.00	33 - 48

[1)] Recommended diameter ranges.
[2)] see Figure 17.

For Slydring® to other standards, e.g French standard NF E 48-037, please contact us.

Radial clearance S_1

The minimum radial gap is to be calculated taking into account;

- the fitting tolerances of the hardware
- the tolerance on the ring thickness
- an allowance for wear
- in case of high radial loads an allowance for elastic deformation
- a safety margin to avoid metal-to-metal contact

The gaps S_1 can be chosen larger than near to the seal (attention: take care of gap dimension for the seal) thus allowing slight tilting of the piston, still without metal-to-metal contact.

It also allows foreign particles to be wiped away by the Slydring® rather than being squeezed between the metal components. The slot 'Z_1' allows fluid to pass across the ring thus preventing fluid pressure build-up which might cause extrusion of the guide ring. To ensure the ring cannot escape out of the groove it is recommended to observe following radial gap sizes as maximum:

- 0.50 mm for GP43 (1.55 mm thickness)
- 0.90 mm for GP65 to GP75 (2.50 mm thickness)
- 1.50 mm for GP98 and GP98X (4.00 mm thickness)

Table XLIII Recommended Radii for Groove Dia.

D_N	r max.
8 - 250	0.2
> 250	0.4

Table XLIV Surface Roughness

Parameter	Mating Surface µm	Groove Surface µm
R_{max}	1.00 - 4.00	< 16.0
R_z DIN	0.63 - 2.50	< 10.0
R_a	0.10 - 0.40	< 2.5

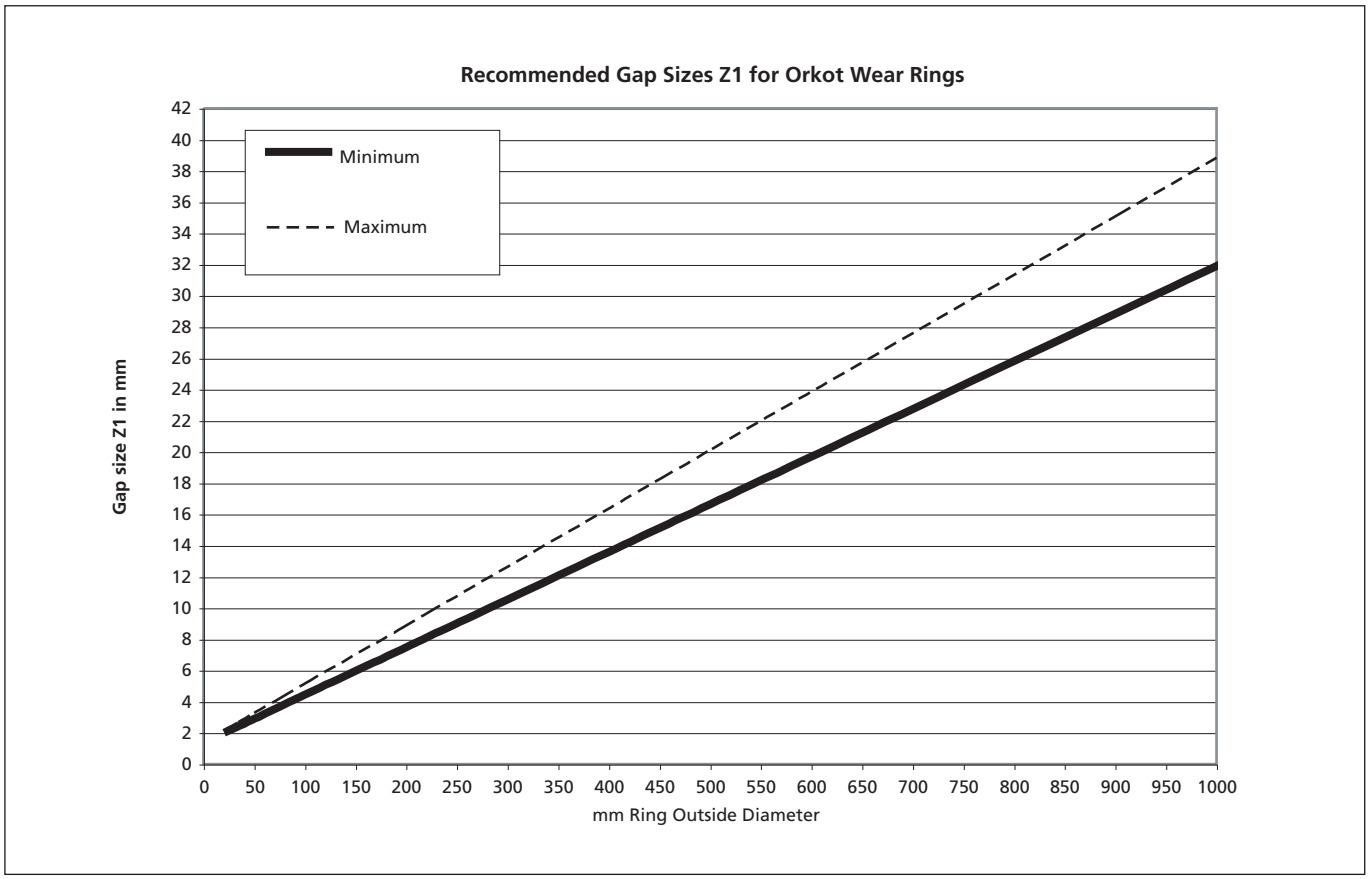

Figure 17 Recommended Gap Sizes Z1 for Orkot Wear Ring

Ordering Example

Slydring® for bore diameter D_N = 100.0 mm
Series GP 69 from Table XLII
Groove width: 9.7 mm, ring thickness: 2.50 mm

Material:	Orkot® C380 (other materials see Table I)
Standard design:	With angle cut Design code: 0
TSS Part No.:	GP6901000 (from Table XLV)

TSS Article No.	GP69	0	1000	-	C380
TSS Series No.					
Design code, standard					
Bore diameter x 10					
Quality Index (Standard)					
Material No.					

The TSS Article No. can be formed from the example above.

Ordering Example for diameter > 1000 mm

Slydring® for bore diameter D_N = 1200.0 mm
Series GP75X from Table XLII
Groove width: 25.0 mm, ring thickness: 2.50 mm

Material:	Orkot® C380
TSS Part No.:	GP75X1200 (from Table XLV)

TSS Article No.	GP75	X	1200	-	C380
TSS Series No.					
Design code					
Bore diameter x 1*					
Quality Index (Standard)					
Material No.					

* For diameters ≥ 1000.0 mm multiply only by factor 1.

Please Note

Orkot® Slydring® for pistons can be used as rod guide ring, f.inst.

GP69 0 1000 - C380

is identical and can be replaced with

GR69 0 0950 - C380

Table XLV Slydring® for Pistons

Dimensions				TSS Part No.
Bore Diameter	Groove Diameter	Groove Width	Thickness	
D_N H9	d_2 h8	L_2 +0.2	W	
16.0	**11.0**	**5.6**	**2.50**	**GP6500160**
18.0	13.0	5.6	2.50	GP6500180
20.0	**15.0**	**5.6**	**2.50**	**GP6500200**
22.0	17.0	5.6	2.50	GP6500220
25.0	**20.0**	**5.6**	**2.50**	**GP6500250**
25.0	20.0	9.7	2.50	GP6900250
27.0	22.0	5.6	2.50	GP6500270
28.0	23.0	5.6	2.50	GP6500280
30.0	25.0	9.7	2.50	GP6900300

All sizes printed in **bold** type conform to ISO 10766 and should be preferred for use.
Additional sizes not covered by this list are also held in stock. Also please note that customer specific sizes can be supplied without tooling costs.

Dimensions				TSS Part No.
Bore Diameter	Groove Diameter	Groove Width	Thickness	
D_N H9	d_2 h8	L_2 +0.2	W	
32.0	**28.9**	**4.0**	**1.55**	**GP4300320**
32.0	**27.0**	**5.6**	**2.50**	**GP6500320**
32.0	27.0	9.7	2.50	GP6900320
33.0	28.0	5.6	2.50	GP6500330
35.0	30.0	5.6	2.50	GP6500350
35.0	30.0	9.7	2.50	GP6900350
36.0	31.0	5.6	2.50	GP6500360
36.0	31.0	9.7	2.50	GP6900360
37.0	32.0	9.7	2.50	GP6900370
40.0	**36.9**	**4.0**	**1.55**	**GP4300400**
40.0	**35.0**	**5.6**	**2.50**	**GP6500400**
40.0	35.0	9.7	2.50	GP6900400
41.0	36.0	5.6	2.50	GP6500410
41.0	36.0	9.7	2.50	GP6900410
42.0	37.0	5.6	2.50	GP6500420
44.0	39.0	5.6	2.50	GP6500440
45.0	40.0	5.6	2.50	GP6500450
45.0	40.0	9.7	2.50	GP6900450
46.0	41.0	9.7	2.50	GP6900460
48.0	43.0	5.6	2.50	GP6500480
50.0	**45.0**	**5.6**	**2.50**	**GP6500500**
50.0	45.0	9.7	2.50	GP6900500
51.0	46.0	9.7	2.50	GP6900510
51.0	46.0	15.0	2.50	GP7300510
52.0	47.0	5.6	2.50	GP6500520
53.0	48.0	5.6	2.50	GP6500530
55.0	50.0	5.6	2.50	GP6500550
55.0	50.0	9.7	2.50	GP6900550
58.0	53.0	5.6	2.50	GP6500580
60.0	55.0	5.6	2.50	GP6500600
60.0	55.0	9.7	2.50	GP6900600
61.0	56.0	5.6	2.50	GP6500610
62.0	57.0	5.6	2.50	GP6500620

All sizes printed in **bold** type conform to ISO 10766 and should be preferred for use.
Additional sizes not covered by this list are also held in stock. Also please note that customer specific sizes can be supplied without tooling costs.

Orkot® Slydring® - Wear Ring

Dimensions				TSS Part No.
Bore Diameter	Groove Diameter	Groove Width	Thickness	
D_N H9	d_2 h8	L_2 +0.2	W	
62.0	56.0	9.7	2.50	GP6900610
63.0	**58.0**	**5.6**	**2.50**	**GP6500630**
63.0	**58.0**	**9.7**	**2.50**	**GP6900630**
65.0	60.0	5.6	2.50	GP6500650
65.0	60.0	9.7	2.50	GP6900650
68.0	63.0	5.6	2.50	GP6500680
68.0	63.0	9.7	2.50	GP6900680
70.0	65.0	5.6	2.50	GP6500700
70.0	65.0	9.7	2.50	GP6900700
74.0	69.0	5.6	2.50	GP6500740
75.0	70.0	5.6	2.50	GP6500750
75.0	70.0	9.7	2.50	GP6900750
80.0	**75.0**	**5.6**	**2.50**	**GP6500800**
80.0	**75.0**	**9.7**	**2.50**	**GP6900800**
80.0	**75.0**	**25.0**	**2.50**	**GP7500800**
85.0	80.0	5.6	2.50	GP6500850
85.0	80.0	9.7	2.50	GP6900850
90.0	85.0	5.6	2.50	GP6500900
90.0	85.0	9.7	2.50	GP6900900
95.0	90.0	5.6	2.50	GP6500950
95.0	90.0	9.7	2.50	GP6900950
100.0	**95.0**	**5.6**	**2.50**	**GP6501000**
100.0	**95.0**	**9.7**	**2.50**	**GP6901000**
100.0	**95.0**	**15.0**	**2.50**	**GP7301000**
100.0	**95.0**	**25.0**	**2.50**	**GP7501000**
105.0	100.0	5.6	2.50	GP6501050
105.0	100.0	9.7	2.50	GP6901050
110.0	105.0	9.7	2.50	GP6901100
115.0	110.0	9.7	2.50	GP6901150
120.0	115.0	9.7	2.50	GP6901200
120.0	115.0	15.0	2.50	GP7301200
125.0	**120.0**	**5.6**	**2.50**	**GP6501250**
125.0	**120.0**	**9.7**	**2.50**	**GP6901250**

All sizes printed in **bold** type conform to ISO 10766 and should be preferred for use.
Additional sizes not covered by this list are also held in stock. Also please note that customer specific sizes can be supplied without tooling costs.

Dimensions				TSS Part No.
Bore Diameter	Groove Diameter	Groove Width	Thickness	
D_N H9	d_2 h8	L_2 +0.2	W	
125.0	**120.0**	**15.0**	**2.50**	**GP7301250**
125.0	**120.0**	**25.0**	**2.50**	**GP7501250**
130.0	125.0	9.7	2.50	GP6901300
130.0	125.0	15.0	2.50	GP7301300
135.0	130.0	9.7	2.50	GP6901350
135.0	130.0	15.0	2.50	GP7301350
140.0	**135.0**	**9.7**	**2.50**	**GP6901400**
140.0	**135.0**	**15.0**	**2.50**	**GP7301400**
140.0	**135.0**	**25.0**	**2.50**	**GP7501400**
145.0	140.0	25.0	2.50	GP7501450
150.0	145.0	9.7	2.50	GP6901500
150.0	145.0	15.0	2.50	GP7301500
150.0	145.0	25.0	2.50	GP7501500
160.0	**155.0**	**9.7**	**2.50**	**GP6901600**
160.0	**155.0**	**15.0**	**2.50**	**GP7301600**
170.0	165.0	15.0	2.50	GP7301700
175.0	170.0	25.0	2.50	GP7501750
180.0	**175.0**	**9.7**	**2.50**	**GP6901800**
180.0	**175.0**	**15.0**	**2.50**	**GP7301800**
180.0	175.0	25.0	2.50	GP7501800
190.0	185.0	9.7	2.50	GP6901900
190.0	185.0	15.0	2.50	GP7301900
200.0	**195.0**	**9.7**	**2.50**	**GP6902000**
200.0	**195.0**	**15.0**	**2.50**	**GP7302000**
200.0	195.0	25.0	2.50	GP7502000
205.0	200.0	15.0	2.50	GP7302050
210.0	205.0	15.0	2.50	GP7302100
220.0	**215.0**	**9.7**	**2.50**	**GP6902200**
220.0	**215.0**	**15.0**	**2.50**	**GP7302200**
220.0	215.0	25.0	2.50	GP7502200
230.0	225.0	9.7	2.50	GP6902300
230.0	225.0	15.0	2.50	GP7302300
230.0	225.0	25.0	2.50	GP7502300

All sizes printed in **bold** type conform to ISO 10766 and should be preferred for use.
Additional sizes not covered by this list are also held in stock. Also please note that customer specific sizes can be supplied without tooling costs.

Orkot® Slydring® - Wear Ring

Dimensions				TSS Part No.
Bore Diameter	Groove Diameter	Groove Width	Thickness	
D_N H9	d_2 h8	L_2 +0.2	W	
240.0	235.0	9.7	2.50	GP6902400
240.0	235.0	15.0	2.50	GP7302400
240.0	235.0	25.0	2.50	GP7502400
250.0	**245.0**	**9.7**	**2.50**	**GP6902500**
250.0	**245.0**	**15.0**	**2.50**	**GP7302500**
250.0	245.0	25.0	**2.50**	GP7502500
270.0	265.0	25.0	2.50	GP7502600
280.0	275.0	9.7	2.50	GP6902800
280.0	**275.0**	**15.0**	**2.50**	**GP7302800**
280.0	**272.0**	**25.0**	**4.00**	**GP9802800**
300.0	295.0	15.0	2.50	GP7303000
300.0	295.0	25.0	2.50	GP7503000
300.0	292.0	25.0	4.00	GP9803000
310.0	302.0	25.0	4.00	GP9803100
320.0	**315.0**	**15.0**	**2.50**	**GP7303200**
320.0	**315.0**	**25.0**	**2.50**	**GP7503200**
320.0	**312.0**	**25.0**	**4.00**	**GP9803200**
340.0	335.0	25.0	2.50	GP7503400
340.0	332.0	25.0	4.00	GP9803400
350.0	345.0	25.0	2.50	GP7503500
360.0	**355.0**	**15.0**	**2.50**	**GP7303600**
360.0	**355.0**	**25.0**	**2.50**	**GP7503600**
360.0	**352.0**	**25.0**	**4.00**	**GP9803600**
400.0	**395.0**	**15.0**	**2.50**	**GP7304000**
400.0	**395.0**	**25.0**	**2.50**	**GP7504000**
400.0	**392.0**	**25.0**	**4.00**	**GP9804000**
420.0	415.0	25.0	2.50	GP7504200
440.0	432.0	25.0	4.00	GP9804400
450.0	**445.0**	**15.0**	**2.50**	**GP7304500**
450.0	**445.0**	**25.0**	**2.50**	**GP7504500**
450.0	**442.0**	**25.0**	**4.00**	**GP9804500**
500.0	**495.0**	**15.0**	**2.50**	**GP7305000**
500.0	**495.0**	**25.0**	**2.50**	**GP7505000**

All sizes printed in **bold** type conform to ISO 10766 and should be preferred for use.
Additional sizes not covered by this list are also held in stock. Also please note that customer specific sizes can be supplied without tooling costs.

Dimensions				TSS Part No.
Bore Diameter	Groove Diameter	Groove Width	Thickness	
D_N H9	d_2 h8	L_2 +0.2	W	
500.0	**492.0**	**25.0**	**4.00**	**GP9805000**
600.0	595.0	25.0	2.50	GP7506000
600.0	592.0	25.0	4.00	GP9806000
700.0	692.0	25.0	4.00	GP9807000
1000.0	995.0	25.0	2.50	GP75X1000
1000.0	992.0	25.0	4.00	GP98X1000
1200.0	1195.0	25.0	2.50	GP75X1200
1500.0	1495.0	25.0	2.50	GP75X1500

All sizes printed in **bold** type conform to ISO 10766 and should be preferred for use.
Additional sizes not covered by this list are also held in stock. Also please note that customer specific sizes can be supplied without tooling costs.

■ Installation Recommendation, Orkot® Slydring® for Rod According to ISO 10766 Groove Dimension

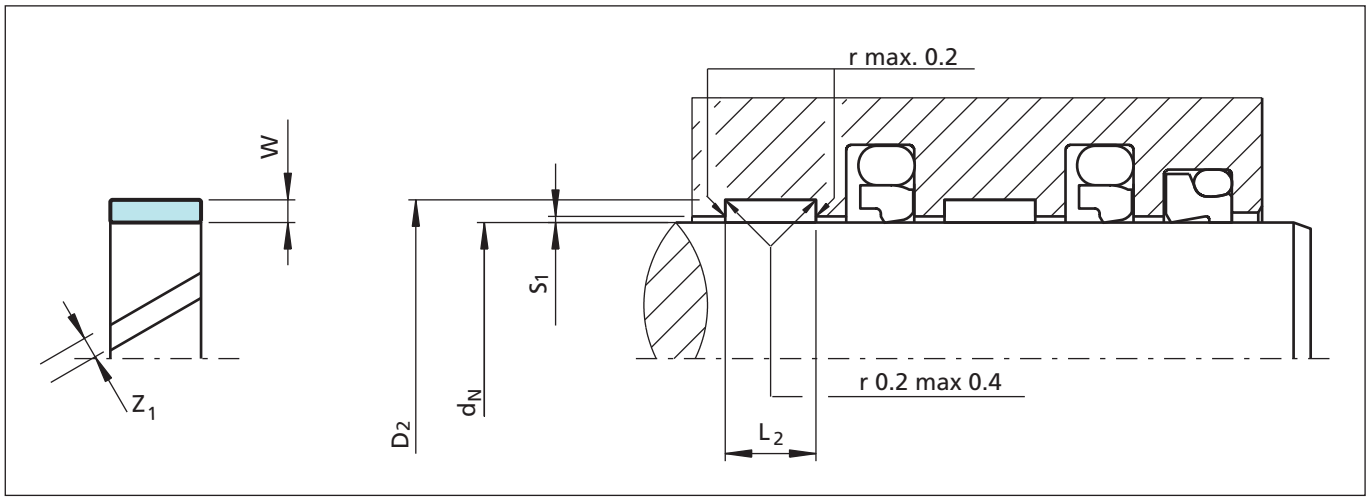

Figure 18 Installation drawing

Table XLVI Installation dimensions

Serial No.	Rod Diameter[1)]	Groove Diameter	Groove Width	Ring Thickness	Ring Gap[2)]
	d_N f8/h9	D_2 H8	L_2 +0.2	W	Z_1
GR43	8 - 50.0	d_N + 3.10	4.00	1.55	1 - 3
GR65	16 - 120.0	d_N + 5.00	5.60	2.50	2 - 6
GR69	25 - 250.0	d_N + 5.00	9.70	2.50	2 - 9
GR73	75 - 500.0	d_N + 5.00	15.00	2.50	4 - 17
GR75	120 - 999.9	d_N + 5.00	25.00	2.50	5 - 33
GR75X	1000 - 1500.0	d_N + 5.00	25.00	2.50	33 - 49
GR98	280 - 999.9	d_N + 8.00	25.00	4.00	10 - 33
GR98X	1000 - 1500.0	d_N + 8.00	25.00	4.00	33 - 49

1) Recommended diameter ranges.
2) see Figure 19.

For Slydring® to other standards, e.g French standard NF E 48-037, please contact us.

Radial clearance S_1

The minimum radial gap is to be calculated taking into account;
- the fitting tolerances of the hardware
- the tolerance on the ring thickness
- an allowance for wear
- in case of high radial loads an allowance for elastic deformation
- a safety margin to avoid metal-to-metal contact

The gaps S_1 can be chosen larger than near to the seal (attention: take care of gap dimension for the seal) thus allowing slight bending of the rod, still without metal-to-metal contact. It also allows foreign particles to be wiped away by the Slydring® rather than being squeezed between the metal components (see page 13). The slot "Z_1" allows fluid to pass across the ring thus preventing fluid pressure build-up which might cause extrusion of the guide ring. To ensure the ring cannot escape out of the groove it is recommended to observe following radial gap sizes as maximum:

- 0.50 mm for GR43 (1.55 mm thickness)
- 0.90 mm for GR65 to GR75 (2.50 mm thickness)
- 1.50 mm for GR98 and GR98X (4.00 mm thickness)

Table XLVII Recommended Radii for Groove Bottom.

d_N	r max.
8 - 250	0.2
> 250	0.4

Table XLVIII Surface Roughness

Parameter	Mating Surface µm	Groove Surface µm
R_{max}	1.00 - 4.00	< 16.0
R_z DIN	0.63 - 2.50	< 10.0
R_a	0.10 - 0.40	< 2.5

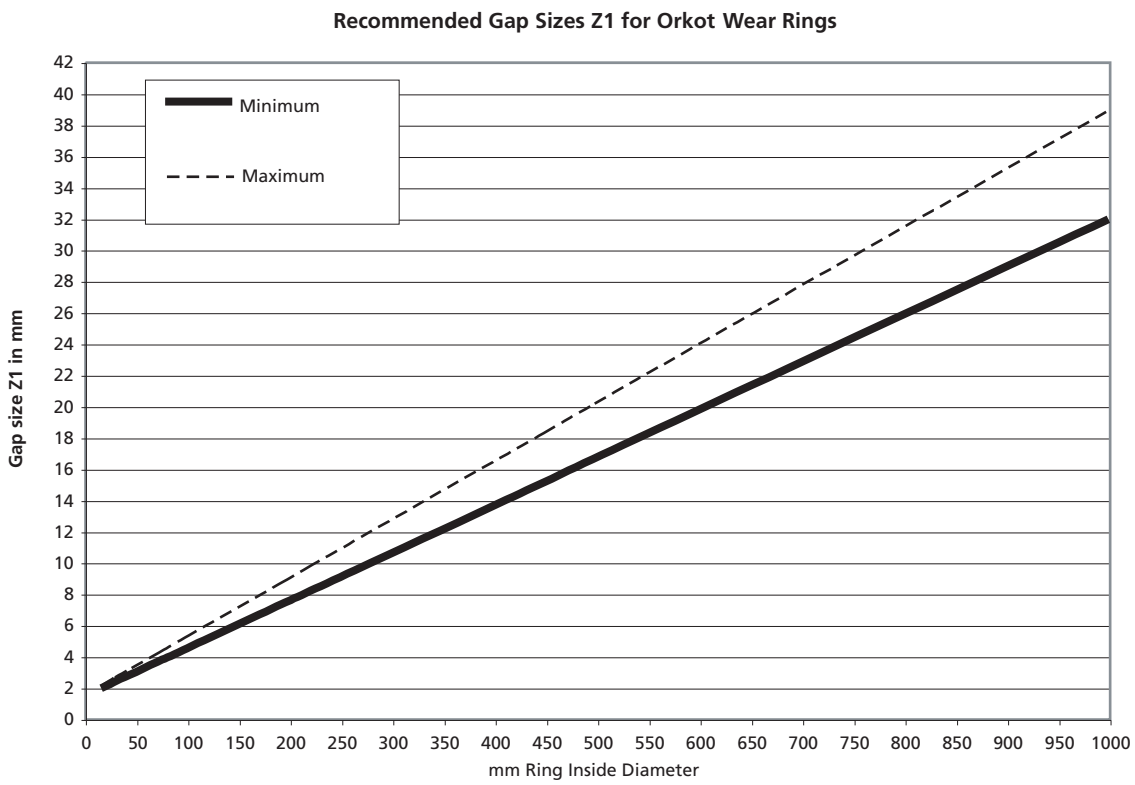

Figure 19 Recommended Gap Sizes Z1 for Orkot Wear Ring

Ordering Example

Slydring® for rod diameter d_N = 63.0 mm
Series GR 65 from Table XLVI
Groove width: 5.6 mm, ring thickness: 2.50 mm

Material:	Orkot® C380 (other materials see Table I)
Standard design:	With angle cut Design code: 0
TSS Part No.:	GR6500630 (from Table XLIX)

TSS Article No.	GR65	0	0630	-	C380
TSS Series No.					
Design code, standard					
Rod diameter x 10					
Quality Index (Standard)					
Material No.					

Ordering Example

Slydring® for rod diameter d_N = 63.0 mm
Series GR 69 from Table XLVI
Groove width: 9.7 mm, ring thickness: 2.50 mm

Material:	Orkot® C380
Standard design:	With angle cut Design code: 0
TSS Part No.:	GR6500630 (from Table XLIX)

TSS Article No.	GR69	0	0630	-	C380
TSS Series No.					
Design code, standard					
Rod diameter x 10					
Quality Index (Standard)					
Material No.					

Ordering Example for diameter >1000 mm

Slydring® for rod diameter d_N = 1200.0 mm
Series GR 75X from Table XLVI
Groove width: 25.0 mm, ring thickness: 2.50 mm

Material:	Orkot® C380
TSS Part No.:	GR75X1200 (from Table XLIX)

TSS Article No.	GR75	X	1200	-	C380
TSS Series No.					
Design code					
Rod diameter x 1*					
Quality Index (Standard)					
Material No.					

* For diameters ≥ 1000.0 mm multiply only by factor 1.

Please Note

Orkot® Slydring® for rods can be used as piston guide ring, f.inst.

GR65 0 0630 - C380

is identical and can be replaced with

GP65 0 0680 - C380

Table XLIX Slydring® for Rods

Dimensions				TSS Part No.
Rod Diameter	Groove Diameter	Groove Width	Thickness	
d_N f8/h9	D_2 H8	L_2 +0.2	W	
11.0	14.1	4.0	1.55	GR4300110
15.0	18.1	4.0	1.55	GR4300150
16.0	21.0	5.6	2.50	GR6500160
18.0	23.0	5.6	2.50	GR6500180
20.0	25.0	5.6	2.50	GR6500200
20.0	25.0	9.7	2.50	GR6900200
22.0	27.0	5.6	2.50	GR6500220
25.0	**30.0**	**5.6**	**2.50**	**GR6500250**
25.0	30.0	9.7	2.50	GR6900250
27.0	32.0	9.7	2.50	GR6900270
28.0	**31.1**	**4.0**	**1.55**	**GR4300280**
28.0	**33.0**	**5.6**	**2.50**	**GR6500280**
28.0	33.0	9.7	2.50	GR6900280
30.0	35.0	5.6	2.50	GR6500300
30.0	35.0	9.7	2.50	GR6900300
32.0	**37.0**	**5.6**	**2.50**	**GR6500320**
32.0	**37.0**	**9.7**	**2.50**	**GR6900320**
35.0	40.0	9.7	2.50	GR6900350
36.0	**41.0**	**5.6**	**2.50**	**GR6500360**
36.0	**41.0**	**9.7**	**2.50**	**GR6900360**
36.0	41.0	15.0	2.50	GR7300360
40.0	**45.0**	**5.6**	**2.50**	**GR6500400**
40.0	**45.0**	**9.7**	**2.50**	**GR6900400**
40.0	45.0	15.0	2.50	GR7300400
40.0	**45.0**	**25.0**	**2.50**	**GR7500400**
42.0	47.0	5.6	2.50	GR6500420
43.0	48.0	5.6	2.50	GR6500430
45.0	**50.0**	**5.6**	**2.50**	**GR6500450**
45.0	**50.0**	**9.7**	**2.50**	**GR6900450**
45.0	50.0	15.0	2.50	GR7300450
48.0	53.0	5.6	2.50	GR6500480
48.0	53.0	9.7	2.50	GR6900480
50.0	**55.0**	**5.6**	**2.50**	**GR6500500**

All sizes printed in **bold** type conform to ISO 10766 and should be preferred for use.
Additional sizes not covered by this list are also held in stock. Also please note that customer specific sizes can be supplied without tooling costs.

Orkot® Slydring® - Wear Ring

Dimensions				TSS Part No.
Rod Diameter	Groove Diameter	Groove Width	Thickness	
d_N f8/h9	D_2 H8	L_2 +0.2	W	
50.0	**55.0**	**9.7**	**2.50**	**GR6900500**
50.0	55.0	15.0	2.50	GR7300500
52.0	57.0	5.6	2.50	GR6500520
52.0	57.0	9.7	2.50	GR6900520
55.0	60.0	9.7	2.50	GR6900550
55.0	60.0	15.0	2.50	GR7300550
55.0	60.0	25.0	2.50	GR7500550
56.0	**61.0**	**5.6**	**2.50**	**GR6500560**
56.0	**61.0**	**9.7**	**2.50**	**GR6900560**
56.0	**61.0**	**15.0**	**2.50**	**GR7300560**
58.0	63.0	5.6	2.50	GR6500580
58.0	63.0	9.7	2.50	GR6900580
60.0	65.0	5.6	2.50	GR6500600
60.0	65.0	9.7	2.50	GR6900600
60.0	65.0	15.0	2.50	GR7300600
60.0	65.0	25.0	2.50	GR7500600
63.0	**68.0**	**9.7**	**2.50**	**GR6900630**
63.0	68.0	15.0	2.50	GR7300630
65.0	70.0	5.6	2.50	GR6500650
65.0	70.0	9.7	2.50	GR6900650
65.0	70.0	15.0	2.50	GR7300650
70.0	**75.0**	**5.6**	**2.50**	**GR6500700**
70.0	**75.0**	**9.7**	**2.50**	**GR6900700**
70.0	75.0	15.0	2.50	GR7300700
70.0	**75.0**	**25.0**	**2.50**	**GR7500700**
75.0	80.0	5.6	2.50	GR6500750
75.0	80.0	9.7	2.50	GR6900750
75.0	80.0	15.0	2.50	GR7300750
80.0	85.0	5.6	2.50	GR6500800
80.0	**85.0**	**9.7**	**2.50**	**GR6900800**
80.0	**85.0**	**15.0**	**2.50**	**GR7300800**
80.0	**85.0**	**25.0**	**2.50**	**GR7500800**
85.0	90.0	9.7	2.50	GR6900850

All sizes printed in **bold** type conform to ISO 10766 and should be preferred for use.
Additional sizes not covered by this list are also held in stock. Also please note that customer specific sizes can be supplied without tooling costs.

Dimensions				TSS Part No.
Rod Diameter	Groove Diameter	Groove Width	Thickness	
d_N f8/h9	D_2 H8	L_2 +0.2	W	
85.0	90.0	15.0	2.50	GR7300850
90.0	95.0	5.6	2.50	GR6500900
90.0	**95.0**	**9.7**	**2.50**	**GR6900900**
90.0	**95.0**	**15.0**	**2.50**	**GR7300900**
90.0	95.0	25.0	2.50	GR7500900
95.0	100.0	5.6	2.50	GR6500950
95.0	100.0	9.7	2.50	GR6900950
95.0	100.0	15.0	2.50	GR7300950
100.0	105.0	5.6	2.50	GR6501000
100.0	**105.0**	**9.7**	**2.50**	**GR6901000**
100.0	**105.0**	**15.0**	**2.50**	**GR7301000**
100.0	105.0	25.0	2.50	GR7501000
105.0	110.0	15.0	2.50	GR7301050
105.0	110.0	25.0	2.50	GR7501050
110.0	**115.0**	**9.7**	**2.50**	**GR6901100**
110.0	**115.0**	**15.0**	**2.50**	**GR7301100**
110.0	115.0	25.0	2.50	GR7501100
115.0	120.0	9.7	2.50	GR6901150
115.0	120.0	15.0	2.50	GR7301150
120.0	125.0	15.0	2.50	GR7301200
125.0	**130.0**	**15.0**	**2.50**	**GR7301250**
125.0	130.0	25.0	2.50	GR7501250
130.0	135.0	15.0	2.50	GR7301300
140.0	**145.0**	**9.7**	**2.50**	**GR6901400**
140.0	**145.0**	**15.0**	**2.50**	**GR7301400**
140.0	145.0	25.0	2.50	GR7501400
150.0	155.0	15.0	2.50	GR7301500
150.0	155.0	25.0	2.50	GR7501500
155.0	160.0	15.0	2.50	GR7301550
155.0	160.0	25.0	2.50	GR7501550
160.0	**165.0**	**9.7**	**2.50**	**GR6901600**
160.0	**165.0**	**15.0**	**2.50**	**GR7301600**
160.0	**165.0**	**25.0**	**2.50**	**GR7501600**

All sizes printed in **bold** type conform to ISO 10766 and should be preferred for use.
Additional sizes not covered by this list are also held in stock. Also please note that customer specific sizes can be supplied without tooling costs.

Orkot® Slydring® - Wear Ring

Dimensions				TSS Part No.
Rod Diameter	Groove Diameter	Groove Width	Thickness	
d_N f8/h9	D_2 H8	L_2 +0.2	W	
170.0	175.0	15.0	2.50	GR7301700
170.0	175.0	25.0	2.50	GR7501700
180.0	**185.0**	**15.0**	**2.50**	**GR7301800**
190.0	195.0	15.0	2.50	GR7301900
190.0	195.0	25.0	2.50	GR7501900
200.0	**205.0**	**15.0**	**2.50**	**GR7302000**
200.0	**205.0**	**25.0**	**2.50**	**GR7502000**
200.0	**208.0**	**25.0**	**4.00**	**GR9802000**
210.0	215.0	15.0	2.50	GR7302100
220.0	**225.0**	**15.0**	**2.50**	**GR7302200**
220.0	**225.0**	**25.0**	**2.50**	**GR7502200**
230.0	235.0	25.0	2.50	GR7502300
240.0	245.0	25.0	2.50	GR7502400
240.0	248.0	25.0	4.00	GR9802400
250.0	**255.0**	**25.0**	**2.50**	**GR7502500**
270.0	275.0	15.0	2.50	GR7302700
280.0	**285.0**	**15.0**	**2.50**	**GR7302800**
280.0	**285.0**	**25.0**	**2.50**	**GR7502800**
280.0	**288.0**	**25.0**	**4.00**	**GR9802800**
300.0	305.0	25.0	2.50	GR7503000
320.0	**325.0**	**25.0**	**2.50**	**GR7503200**
320.0	**328.0**	**25.0**	**4.00**	**GR9803200**
350.0	355.0	25.0	2.50	GR7503500
360.0	**365.0**	**25.0**	**2.50**	**GR7503600**
360.0	**368.0**	**25.0**	**4.00**	**GR9803600**
400.0	405.0	25.0	2.50	GR7504000
400.0	408.0	25.0	4.00	GR9804000
800.0	805.0	25.0	2.50	GR7508000
800.0	808.0	25.0	4.00	GR9808000
1000.0	1005.0	25.0	2.50	GR75X1000
1000.0	1008.0	25.0	4.00	GR98X1000
1200.0	1205.0	25.0	2.50	GR75X1200
1500.0	1505.0	25.0	2.50	GR75X1500

All sizes printed in **bold** type conform to ISO 10766 and should be preferred for use.
Additional sizes not covered by this list are also held in stock. Also please note that customer specific sizes can be supplied without tooling costs.

Notes

TRELLEBORG
SEALING SOLUTIONS

Contact your local marketing company for further information:

Europe	Telephone
AUSTRIA - Vienna (ALBANIA, BOSNIA AND HERZEGOVINA, MACEDONIA, SERBIA AND MONTENEGRO, SLOVENIA)	+43 (0) 1 406 47 33
BELGIUM - Dion-Valmont (LUXEMBOURG)	+32 (0) 10 22 57 50
BULGARIA - Sofia (BELARUS, ROMANIA, TURKEY, UKRAINE)	+359 (0)2 969 95 99
CROATIA - Zagreb	+385 (0) 1 24 56 387
CZECH REPUBLIC - Rakovnik (SLOVAKIA)	+420 313 529 111
DENMARK - Copenhagen	+45 48 22 80 80
FINLAND - Vantaa (ESTONIA, LATVIA)	+358 (0) 207 12 13 50
FRANCE - Maisons-Laffitte	+33 (0) 1 30 86 56 00
GERMANY - Stuttgart	+49 (0) 711 7864 0
GREECE	+41 (0) 21 631 41 11
HUNGARY - Budaörs	+36 (06) 23 50 21 21
ITALY - Livorno	+39 0586 22 6111
THE NETHERLANDS - Barendrecht	+31 (0) 10 29 22 111
NORWAY - Oslo	+47 22 64 60 80
POLAND - Warsaw (LITHUANIA)	+48 (0) 22 863 30 11
RUSSIA - Moscow	+7 495 982 39 21
SPAIN - Madrid (PORTUGAL)	+34 (0) 91 71057 30
SWEDEN - Jönköping	+46 (0) 36 34 15 00
SWITZERLAND - Crissier	+41 (0) 21 631 41 11
UNITED KINGDOM - Solihull (EIRE)	+44 (0) 121 744 1221
AFRICA REGIONAL	+41 (0) 21 631 41 11
MIDDLE EAST REGIONAL	+41 (0) 21 631 41 11

Americas	Telephone
AMERICAS - REGIONAL	+1 260 749 9631
BRAZIL - São Paulo	+55 11 3372 4500
CANADA - Etobicoke, ON	+1 416 213 9444
MEXICO - Mexico City	+52 55 57 19 50 05
USA, East - Conshohocken, PA	+1 610 828 3209
USA, Great Lakes - Fort Wayne, IN	+1 260 482 4050
USA, Midwest - Lombard, IL	+1 630 268 9915
USA, Mountain - Broomfield, CO	+1 303 469 1357
USA, Northern California - Fresno, CA	+1 559 449 6070
USA, Northwest - Portland, OR	+1 503 595 6565
USA, South - N. Charleston, SC	+1 843 747 7656
USA, Southwest - Houston, TX	+1 713 461 3495
USA, West - Torrance, CA	+1 310 371 1025

Asia Pacific	Telephone
ASIA PACIFIC REGIONAL	+65 6 577 1778
CHINA - Hong Kong	+852 2366 9165
CHINA - Shanghai	+86 (0) 21 6145 1830
INDIA - Bangalore	+91 (0) 80 2245 5157
JAPAN - Tokyo	+81 (0) 3 5633 8008
KOREA - Seoul	+82 (0) 2 761 3471
MALAYSIA - Kuala Lumpur	+60 (0) 3 9059 6388
TAIWAN - Taichung	+886 4 2382 8886
THAILAND - Bangkok	+66 (0) 2732-2861
SINGAPORE and all other countries in Asia	+65 6 577 1778

www.tss.trelleborg.com

TRELLEBORG
SEALING SOLUTIONS

99GBGOCATAE0111